センターファイル
CENTER FILE

SERVICE DATA
FILE NO. 170-062

版
78.8.4
倉

TOSHIBA

STEREO AMPLIFIER

SB-225

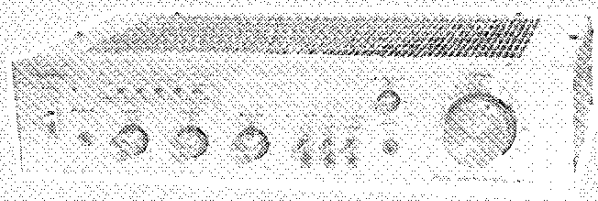

SPECIFICATIONS

Continuous Power Output	
1 kHz (Both channels driven):	30 W x 2 8 ohm
	35 W x 2 4 ohm
40 Hz to 20 kHz (Both channels driven):	28 W x 2 8 ohm
	30 W x 2 4 ohm
Total Harmonic Distortion	
40 to 20 kHz Rated Power:	0.1%
1 Watt Power:	0.08%
Intermodulation Distortion Rated Power:	0.1%
1 Watt Power:	0.08%
Damping Factor:	25
Power Band Width (IHF):	0.1% (10 Hz to 30 kHz)
Load Impedance:	4 to 16 ohm
Input Sensitivity/ Impedance:	PHONO 2.5 mV/47K ohm
	TUNER 150 mV/47K ohm
	TAPE 150 mV/47K ohm
Output Level:	TAPE/REC 150 mV
PHONO Overload:	125 mV 0.1%
Frequency Response	
TUNER:	±2 dB (10 Hz to 50 kHz)
PHONO (RIAA equalization):	±0.5 dB (30 Hz to 15 kHz)
Tone Control BASS:	±8 dB (100 Hz)
TREBLE:	±8 dB (10 kHz)
Loudness Control:	+8 dB (100 Hz)
S/N (IHF A Network)	
PHONO:	72 dB
TUNER/TAPE:	92 dB
MIC Input Sensitivity/ Impedance:	2.0 mV/47K ohm
General	
Power Supply:	AC 220 V 50 Hz or AC 240 V 50 Hz
Power Consumption:	270 watts
Weight:	4.8 kg
Dimensions (WxHxD):	420 x 96 x 241 (mm)

1. OPERATING CONTROLS

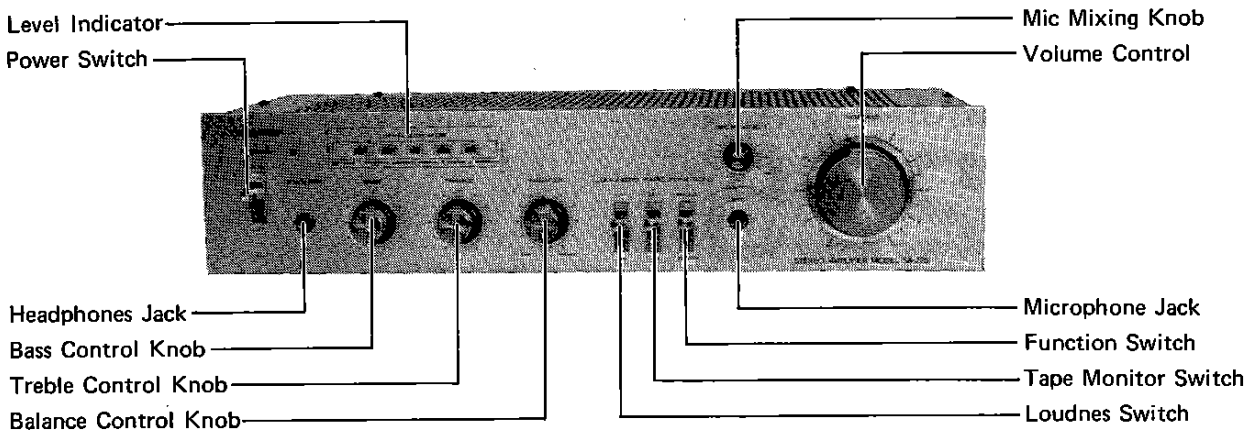

Figure 1.

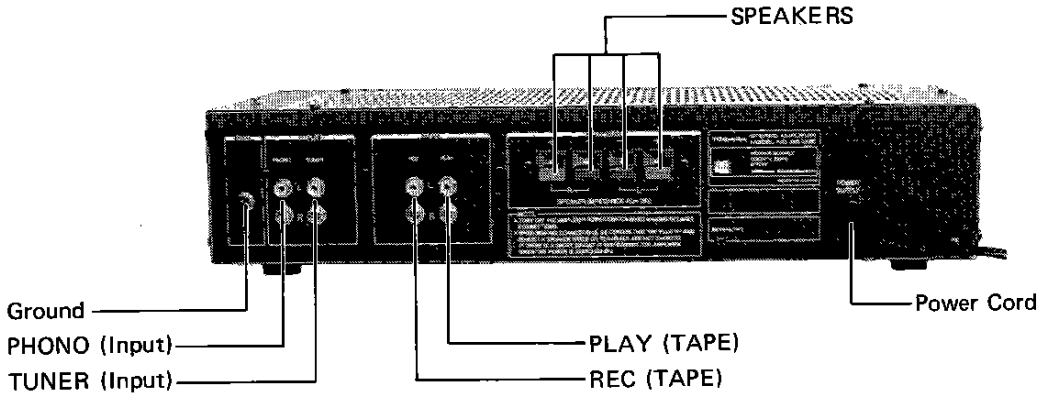

Figure 2.

2. DISASSEMBLY INSTRUCTIONS

TOP COVER REMOVAL

1. Remove six screws ①. See Figure 3.

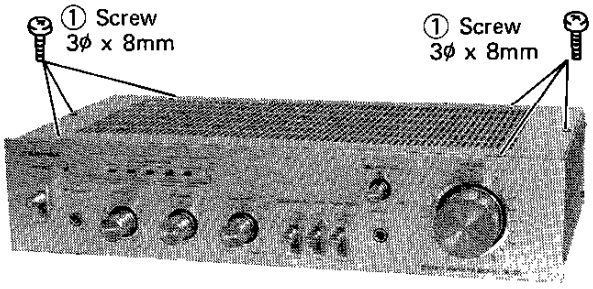

Figure 3.

FRONT PANEL REMOVAL

1. Remove the Top Cover. See figure 3.
2. Remove nine knobs ②. See figure 4.
3. Remove two screws ③. See figure 4.

BOTTOM PLATE REMOVAL

1. Remove four screws ④. See figure 4.

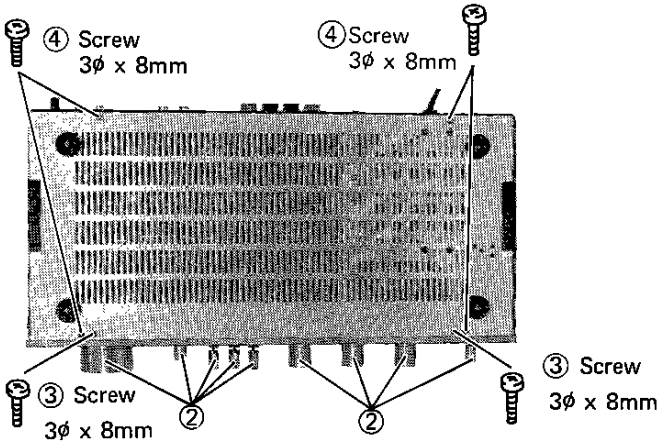

Figure 4.

3. ADJUSTMENTS

IDLE CURRENT ADJUSTMENT

1. Left Channel Check
   Connect ⊖ side of DC voltmeter whose DC sensitivity is under 20mV to Ⓐ and ⊕ side to Ⓑ.
   Adjust VR72 so the voltage reading is kept within from 0.1mV to 0.5mV after warming up for about 40 seconds. Keep main volume at "MIN".
2. Right Channel Check
   Connect ⊖ side of DC voltmeter whose DC sensitivity is under 20mV to Ⓓ and ⊕ side to Ⓒ.
   Adjust VR71 so the voltage reading is kept within from 0.1mV to 0.5mV after warming up for about 40 seconds. Keep main volume at "MIN".
3. When the set is stabilized after 30 minites from when the power is turned on, adjust the VR71, VR72 of left and right channels so that the center value is 15mV.

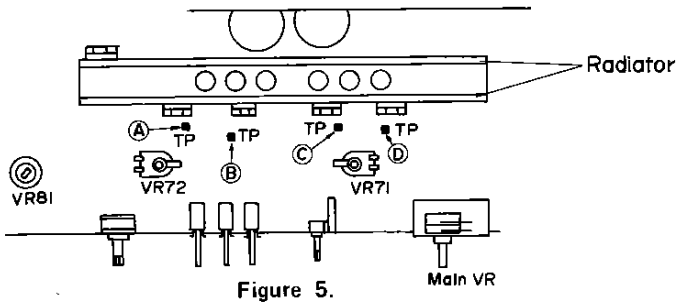

Figure 5.

LEVEL INDICATOR LIGHTING LEVEL ADJUSTMENT

1. Apply 1 kHz signal to both the left and right channels and adjust VR81 so the all level LEDs light simultaneously under 25W output when both channels are activating.
2. Make sure that whole level LEDs go out in order of 5, 4, 3, 2, 1 by reducing the main volume gradually.

4. BLOCK DIAGRAM

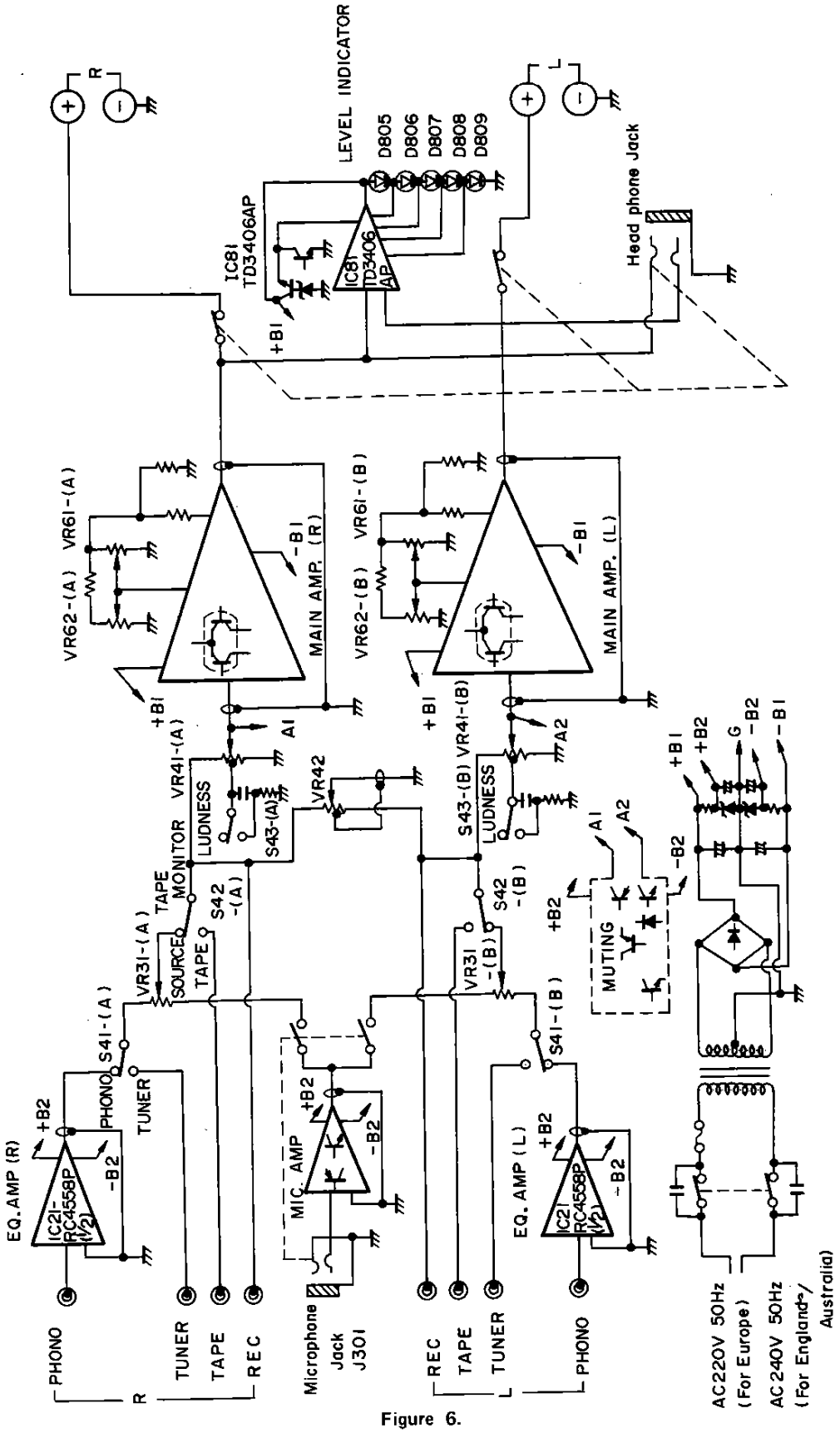

Figure 6.

5. ELECTRICAL PARTS LOCATIONS

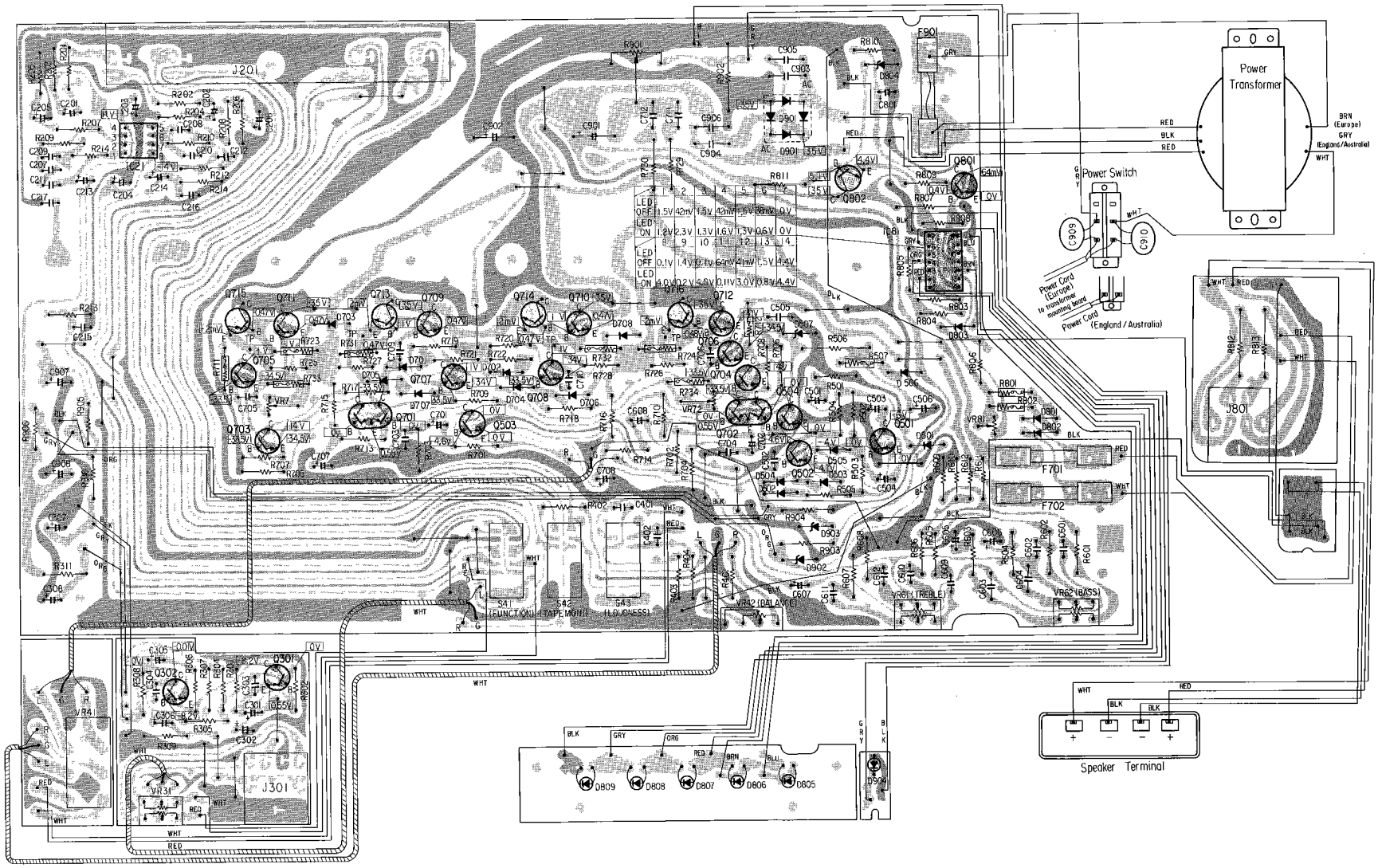

Figure 7.

6. SCHEMATIC DIAGRAM

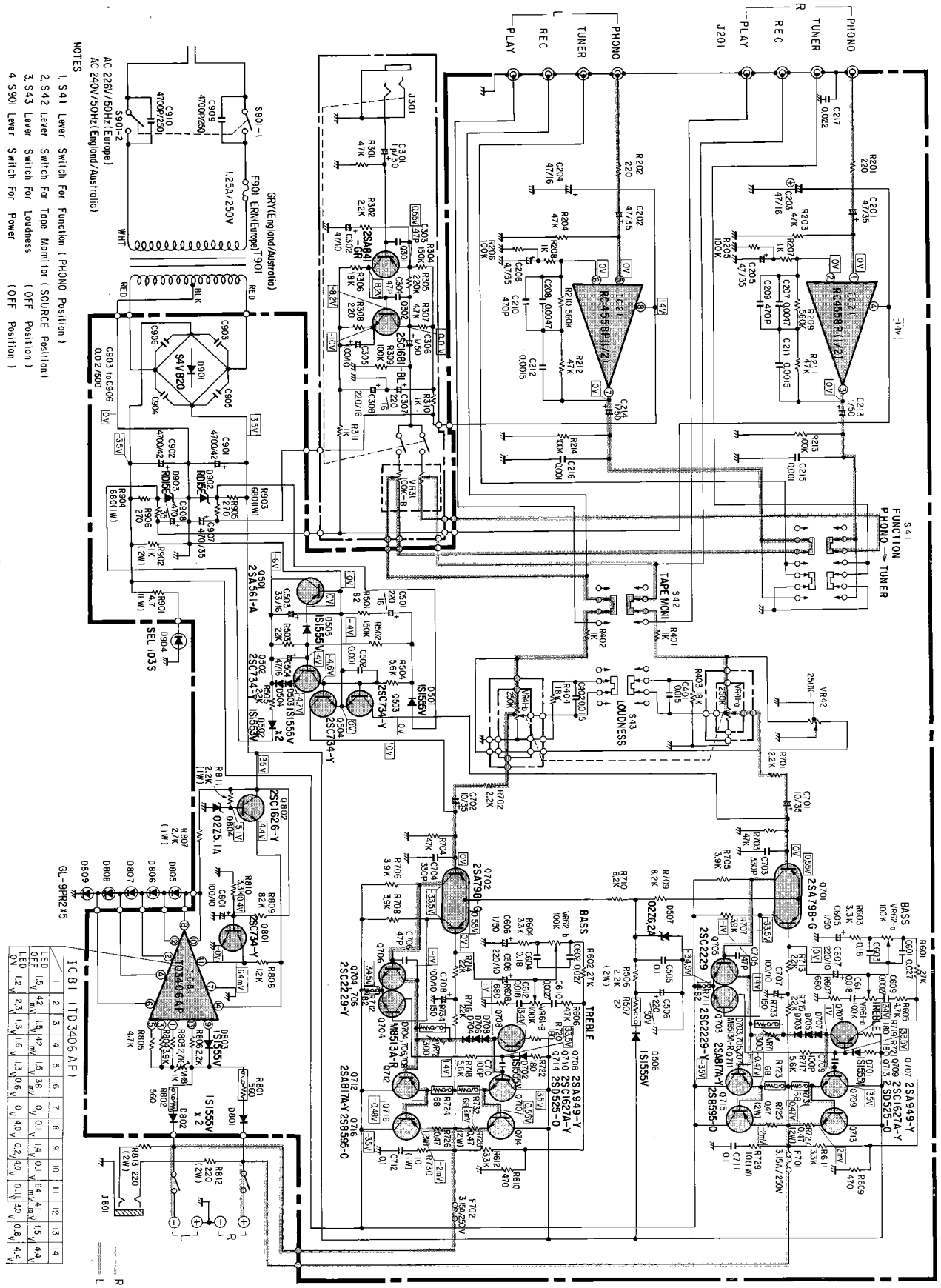

NOTES
1. S41 Lever Switch For Function (PHONO Position)
2. S42 Lever Switch For Tape Monitor (SOURCE Position)
3. S43 Lever Switch For Loudness (OFF Position)
4. S901 Lever Switch For Power (OFF Position)

Figure 8.

7. CABINET PARTS LOCATIONS

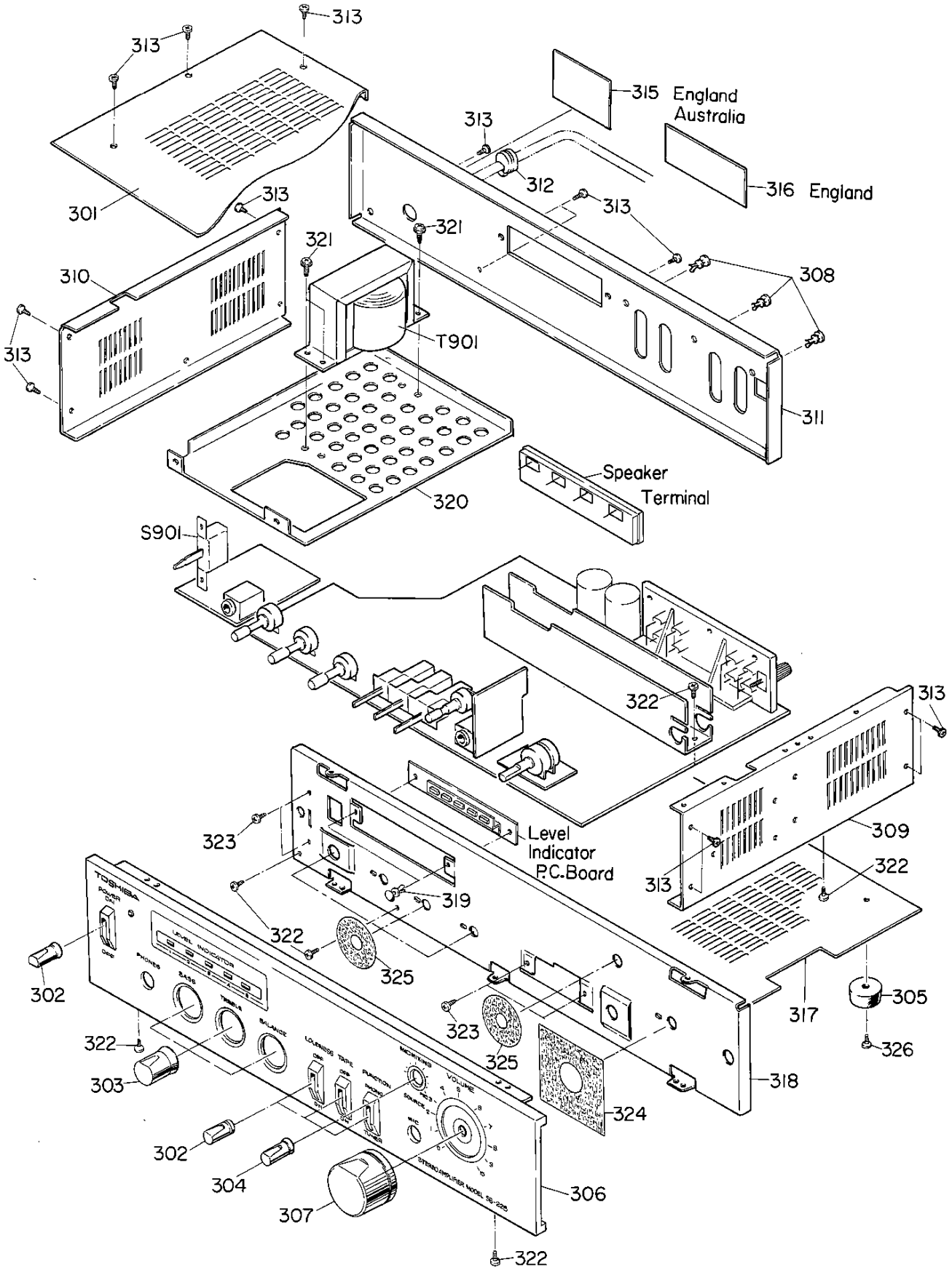

Figure 9.

8. PARTS LIST

Symbol No.	Part No.	Description
		CABINET PARTS
301	22711534	Cover, Top
302	22824227	Knob, Lever, Power/Function/ Tape Monitor/Loudness
303	22826180	Knob, Level, Balance/Bass/Treble
304	22826181	Knob, Mic Mixing
305	22874033	Foot
306	22821405	Panel Ass'y
307	22824241	Knob Ass'y, Volume
308	22705022	Rivet, Plastic, 3ø x 5.5mm
309	22711449	Plate, Side (Right)
310	22711462	Plate, Side (Left)
311	22711586	Plate, Jack
312	25845528	Bush, Nylon, (Europe)
	25845556	Bush, Nylon, (England/Australia)
313	22701326	Screw, 3ø x 8mm
315	22950795	Nameplate (England/ Australia)
316	22950592	Label, Caution (England)
		TRANSISTORS AND DIODE, ICS
Q301		Transistor, 2SA~~841~~GR
Q302		Transistor, 2SC~~1681-BL-3A~~
Q501		Transistor, 2SA561A
Q502		Transistor, 2SC~~734~~-Y
Q503		Transistor, 2SC~~734~~-Y
Q504		Transistor, 2SC~~734~~-Y
Q701, 702	22114468	Transistor, 2SA798-G-DU
Q703, 704		Transistor, 2SC2229
Q705, 706		Transistor, 2SC2229
Q707, 708		Transistor, 2SA949
Q709, 710		Transistor, 2SC1627A-Y-O/Y
Q711, 712		Transistor, 2SA817A
Q713, 714		Transistor, 2SD525-O-R/O
Q715, 716		Transistor, 2SB595-O-R/O
Q801		Transistor, 2SC~~734~~-Y
Q802		Transistor, 2SC1626-Y-O/Y
D501		Diode, 1S1555V
D502		Diode, 1S1553V
D503		Diode, 1S1555V
D504		Diode, 1S1555V
D505		Diode, 1S1555V
D506		Diode, 1S1555V
D507		Diode, 02Z6.2A
D701, 702		Diode, 1S1555V
D703, 704		Diode, M8513A-R
D705, 706		Diode, M8513A-R
D707, 708		Diode, M8513A-R
D801		Diode, 1S1555V
D802		Diode, 1S1555V
D803		Diode, 1S1555V

Symbol No.	Part No.	Description
D804		Diode, 02Z5.1A
D805	22115469	Diode, GL-9PR2
D806	22115469	Diode, GL-9PR2
D807	22115469	Diode, GL-9PR2
D808	22115469	Diode, GL-9PR2
D809	22115469	Diode, GL-9PR2
D901	22115422	Diode, S4VB20
D902, 903	22115368	Diode, RD15E
D904	22115383	Diode, SEL103S
IC21	~~22114635~~	IC, RC4558-P-L
IC81		IC, TD3406AP
		ELECTRICAL PARTS
S41	22195062	Switch, Lever, Function
S42	22195061	Switch, Lever, Tape Monitor
S43	22195060	Switch, Lever, Loudness
S901	22195148	Switch, Lever, Power
J201	22163662	Jack, US8Pin
J301	22163651	Jack, Microphone
J801	~~22163651~~	Jack, Headphone
F701, 702	22144385	Fuse, 3.15A/250V
F901	22144357	Fuse, 1.25A/250V
T901	22223191	Transformer, Power (Europe)
	22223192	Transformer, Power (England/ Australia)
	22162412	Terminal, Speaker
	22176286	Cord, Power (Europe)
	22176547	Cord, Power (England)
	22176489	Cord, Power (Australia)
		CAPACITORS J = ±5%, K = ±10%, M = ±20%, Z = –20% +80%
C201, 202	22467479	Electrolytic, 4.7mfd, 35V
C203, 204	22445470	Electrolytic, 47mfd, 16V
C205, 206	22447479	Electrolytic, 4.7mfd, 35V
C207, 208	22371472	Mylar, 0.0047mfd, 50V, J
C209, 210	22349471	Ceramic, 470pF, 50V, K
C211, 212	22371152	Mylar, 0.0015mfd, 50V, J
C213, 214	22448109	Electrolytic, 1mfd, 50V
C215, 216	22373102	Mylar, 0.001mfd, 50V, M
C217	22342223	Ceramic, 0.022mfd, 50V, Z
C301	22448109	Electrolytic, 1mfd, 50V
C302	22443470	Electrolytic, 47mfd, 10V
C303	22362470	Ceramic, 47pF, 50V, K
C304	22362470	Ceramic, 47pF, 50V, K
C305	22443101	Electrolytic, 100mfd, 10V
C306	22448109	Electrolytic, 1mfd, 50V
C307	22445221	Electrolytic, 220mfd, 16V
C308	22445221	Electrolytic, 220mfd, 16V
C401, 402	22372153	Mylar, 0.015mfd, 50V, K
C501	22445221	Electrolytic, 220mfd, 16V

Symbol No.	Part No.	Description
C502	22373102	Mylar, 0.001mfd, 50V, M
C503	22445330	Electrolytic, 33mfd, 16V
C504	22445470	Electrolytic, 47mfd, 16V
C505	22373104	Mylar, 0.1mfd, 50V, M
C506	22448221	Electrolytic, 220mfd, 50V
C601, 602	22372273	Mylar, 0.027mfd, 50V, K
C603, 604	22372184	Mylar, 0.18mfd, 50V, K
C605, 606	22448109	Electrolytic, 1mfd, 50V
C609, 610	22372272	Mylar, 0.0027mfd, 50V, K
C611, 612	22372183	Mylar, 0.018mfd, 50V, K
C607, 608	22443221	Electrolytic, 220mfd, 10V
C701, 702	22447100	Electrolytic, 10mfd, 35V
C703, 704	22349331	Ceramic, 330pF, 50V, K
C705, 706	22362470	Ceramic, 47pF, 50V, K
C707, 708	22443101	Electrolytic, 100mfd, 10V
C709, 710	22362101	Ceramic, 100pF, 50V, K
C711, 712	22373104	Mylar, 0.1mfd, 50V, M
C801	22443101	Electrolytic, 100mfd, 10V
C901, 902	22440226	Electrolytic, 4700mfd, 42V
C903, 904	22340032	Ceramic, 0.02mfd, 500V, Z
C905, 906	22340032	Ceramic, 0.02mfd, 500V, Z
C907, 908	22447471	Electrolytic, 470mfd, 35V
C909, 910	22340090	Ceramic, 4700pF, 250V, Z
RESISTORS		
All resistors are 1/4W, ±5%, carbon film unless otherwise noted.		
R201, 202	22545221	220 ohm
R203, 204	22545473	47K ohm
R205, 206	22545104	100K ohm
R207, 208	22545102	1K ohm
R209, 210	22545564	560K ohm
R211, 212	22545473	47K ohm
R213, 214	22545104	100K ohm
R301	22545473	47K ohm
R302	22545222	2.2K ohm
R304	22545154	150K ohm
R305	22545104	100K ohm
R306	22545183	18K ohm
R307	22545472	4.7K ohm
R308	22545221	220 ohm
R309	22545104	100K ohm
R310	22545102	1K ohm
R311	22545102	1K ohm
R401, 402	22545102	1K ohm
R403, 404	22545183	18K ohm
R601, 602	22545273	27K ohm
R603, 604	22545332	3.3K ohm
R605, 606	22545472	4.7K ohm
R607, 608	22545681	680 ohm
R609, 610	22545471	470 ohm
R611, 612	22545332	3.3K ohm

Symbol No.	Part No.	Description
R501	22545820	82 ohm
R502	22545154	150K ohm
R503	22545223	22K ohm
R504	22545562	5.6K ohm
R505	22545222	2.2K ohm
R506	22570323	2.2K ohm, 2W, Metal Oxide Film
R507	22500176	22 ohm, Fusible
R701, 702	22545222	2.2K ohm
R703, 704	22545473	47K ohm
R705, 706	22545392	3.9K ohm
R707, 708	22545392	3.9K ohm
R709, 710	22545822	8.2K ohm
R711, 712	22500180	82 ohm , Fusible
R713, 714	22545223	22K ohm
R715, 716	22545223	22K ohm
R717, 718	22545562	5.6K ohm
R719, 720	22545181	180 ohm
R721, 722	22545181	180 ohm
R723, 724	22500150	68 ohm, Fusible
R725, 726	22500189	0.47 ohm, 2W, ±10%, Wire Wound
R727, 728	22500189	0.47 ohm, 2W, ±10%, Wire Wound
R729, 730	22570250	10 ohm, 1W, Metal Film
R731, 732	22500150	68 ohm, Fusible
R733, 734	22500139	150 ohm, Fusible
R801, 802	22500120	560 ohm, Fusible
R803	22545272	2.7K ohm
R804	22545392	3.9K ohm
R805	22545472	4.7K ohm
R806	22545222	2.2K ohm
R807	22570279	2.7K ohm, 1W, Metal Oxide Film
R808	22545122	1.2K ohm
R809	22545823	82K ohm
R810	22545332	3.3K ohm
R811	22570278	2.2K ohm, 1W, Metal Oxide Film
R812	22570311	220 ohm, 2W, Metal Oxide Film
R813	22570311	220 ohm, 2W, Metal Oxide Film
R901	22570282	4.7K ohm, 1W, Metal Oxide Film
R902	22570319	1K ohm, 2W, Metal Oxide Film
R903	22570272	680 ohm, 1W, Metal Oxide Film
R904	22570272	680 ohm, 1W, Metal Oxide Film
R905	22545271	270 ohm
R906	22545271	270 ohm
VR31	22651468	100K ohm, Variable
VR41	22651466	250K ohm, Variable
VR42	22620406	250K ohm, Variable, Balance
VR61	22651467	100K ohm, Variable, Treble
VR62	22651467	100K ohm, Variable, Bass
VR71, 72	22658393	300 ohm, Semi-fixed
VR81	22658291	1K ohm, Semi-fixed
ACCESSORY		
	22902073	Owner's Manual
SB2J0.13	22956590	LABEL, ENGLISH/FRENCH EUROPE