TOSHIBA

AM/FM STEREO RECEIVER

SA-220C

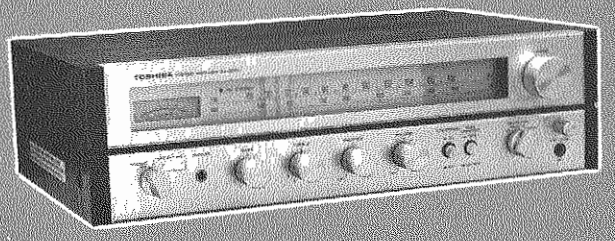

SPECIFICATIONS

■ FM TUNER SECTION

Receiving Frequency:	88~108 MHz
Sensitivity (IHF):	2.3μV
Harmonic Distortion	
MONO:	Less than 0.6% (400 Hz 100%)
STEREO:	Less than 0.8% (400 Hz 100%)
Signal-to-Noise Ratio:	65dB
Frequency Response:	20 Hz~15 kHz ± 3dB
Image Rejection:	55dB (94 MHz)
IF Rejection:	70dB (94 MHz)
Capture Ratio (IHF):	3.5dB
AM Suppression:	45dB
Stereo Separation:	More than 35dB (400 Hz)

■ AM TUNER SECTION

Receiving Frequency:	525~1605 kHz
Sensitivity:	300μV/m (IHF, Ferrite Antenna), 15μV (IHF, ext, antenna)
Image Rejection:	50dB
IF Rejection:	35dB
Signal-to-Noise Ratio:	50dB

Power Output

8 watts per channel, min. RMS, at 4 ohms from 40 Hz to 20 kHz

7 watts per channel, min. RMS, at 8 ohms from 40 Hz to 20 kHz

6 watts per channel, min. RMS, at 16 ohms from 40 Hz to 20 kHz

with no more than 0.8% total harmonic distortion.

Continuous Power Output

Each Channel Driven (1 kHz):	13W/13W (8 ohms)
	10W/10W (4 ohms)
Both Channel Driven (1 kHz):	11W + 11W (8 ohms)
	11W + 11W (4 ohms)
High Frequency Distortion	
at Effective Output:	0.8% or less
at 1W Output:	0.08% or less
Intermodulation Distortion Ratio	
(at Effective Output):	0.8% or less
Frequency Response:	30 Hz ~ 25 kHz ± 3dB
Input Sensitivity (Impedance)	
PHONO:	3mV (50K ohms)
MIC:	8mV (10K ohms)
AUX:	200mV (50K ohms)
TAPE PLAY:	200mV (50K ohms)
Recording Output	
TAPE REC.:	200mV
DIN:	30mV
Signal-to-Noise Ratio (IHF, Short-circuit, A Network)	
PHONO:	70dB or more
AUX:	80dB or more
Residual Noise:	Less than 1mV
Speaker Impedance:	4 ~ 16 ohms (A, B, A+B)
BASS (100 Hz):	+11dB, -10dB
TREBLE (10 kHz):	± 10dB
Damping Factor:	More than 30 (1kHz, 8 ohms)

■ MISCELLANEOUS

Power Voltage:	AC 120V, 60 Hz
Power Consumption:	47W
Dimensions (net):	445(W) x 130(H) x 270(D) mm
Weight (net):	14.3 lb (6.5kg)

TABLE OF CONTENTS

FEATURES 2
1. OPERATING CONTROLS 3
1–1 FRONT VIEW 3
1–2 REAR VIEW 3
2. PARTS LOCATIONS 4
2–1 CHASSIS TOP VIEW 4
2–2 CHASSIS BOTTOM VIEW 4
3. DISASSEMBLY INSTRUCTION 5
3–1 BOTTOM BOARD REMOVAL 5
3–2 CABINET REMOVAL 5
4. TECHNICAL POINTS 6
5. CIRCUIT ADJUSTMENT 7
5–1 FM ADJUSTMENT 7
5–2 AM ADJUSTMENT 9
6. DIAL CORD STRINGING 10
7. ELECTRICAL PARTS LOCATIONS 10
7–1 BOTTOM VIEW OF POWER AMP. P.C. BOARD (AF–109 UNIT) 10
7–2 BOTTOM VIEW OF MIC AMP. P.C. BOARD (AF–110 UNIT) 11
7–3 BOTTOM VIEW OF TUNER PRE-AMP. P.C. BOARD (STP–41 UNIT) 12
8. BLOCK DIAGRAM 13
9. SEMICONDUCTOR BASE DIAGRAMS 14
10. SCHEMATIC DIAGRAM 15
11. EXPLODED VIEW 16
12. PARTS LIST . . . . . 17 ~ 18

FEATURES

1. High sensitivity FET FM Front-end
2. High reliability PLL MPX IC
3. Frequency linear type (FM) wide scale dial
4. PCT low noise transistor
5. Distortion-free, pure complementary OTL Main Amplifier of all stages direct-coupling type
6. Pure electron power transistor protection circuit
7. New mic-mixing circuit system
8. Vertical plug-in type input terminal
9. Wireless shielding

1. OPERATING CONTROLS

1–1 FRONT VIEW

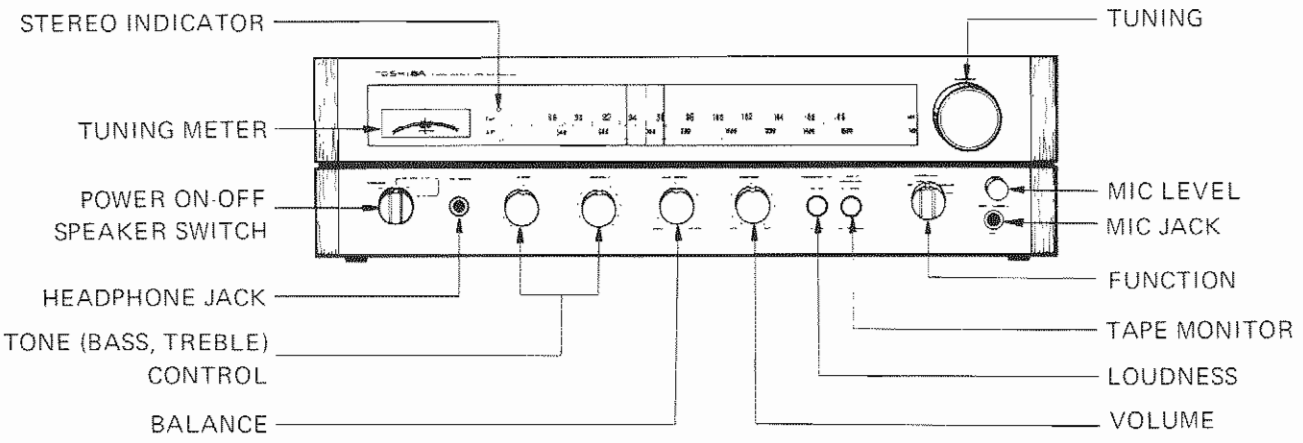

Figure 1.

1–2 REAR VIEW

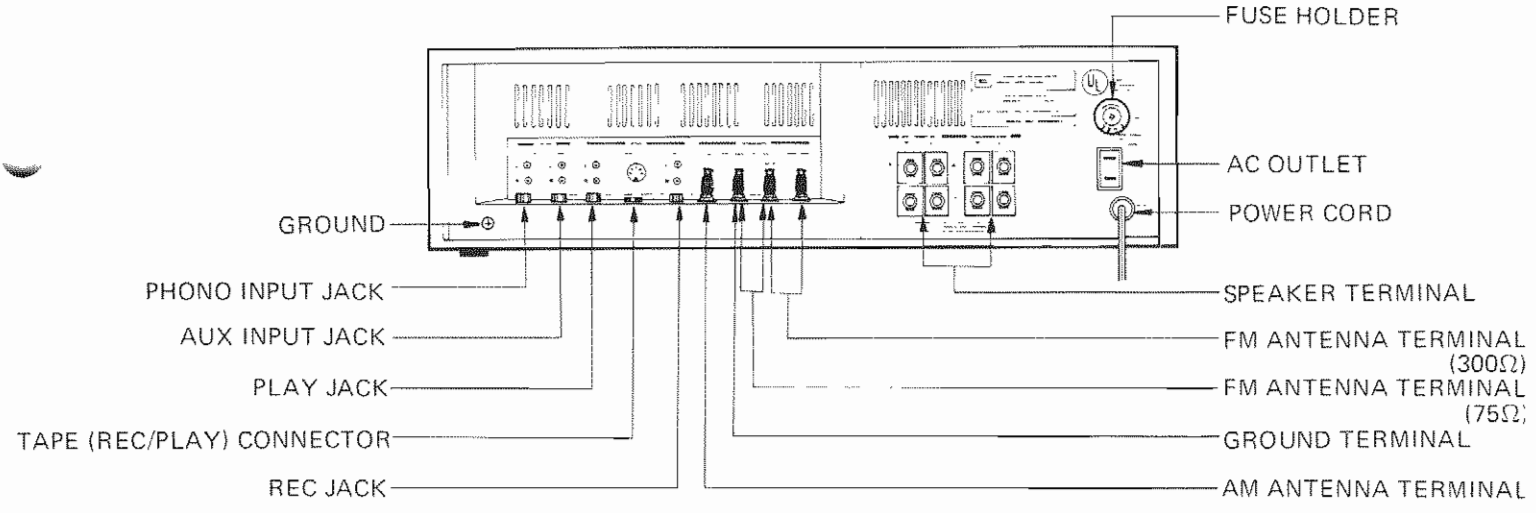

Figure 2.

2. PARTS LOCATIONS

2–1 CHASSIS TOP VIEW

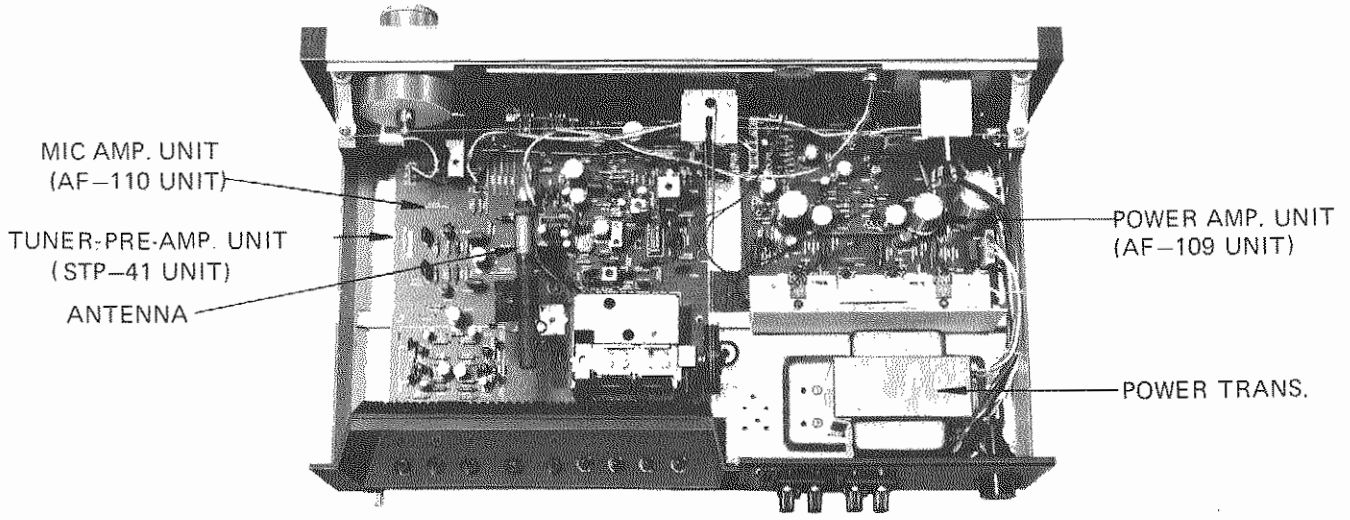

Figure 3.

2–2 CHASSIS BOTTOM VIEW

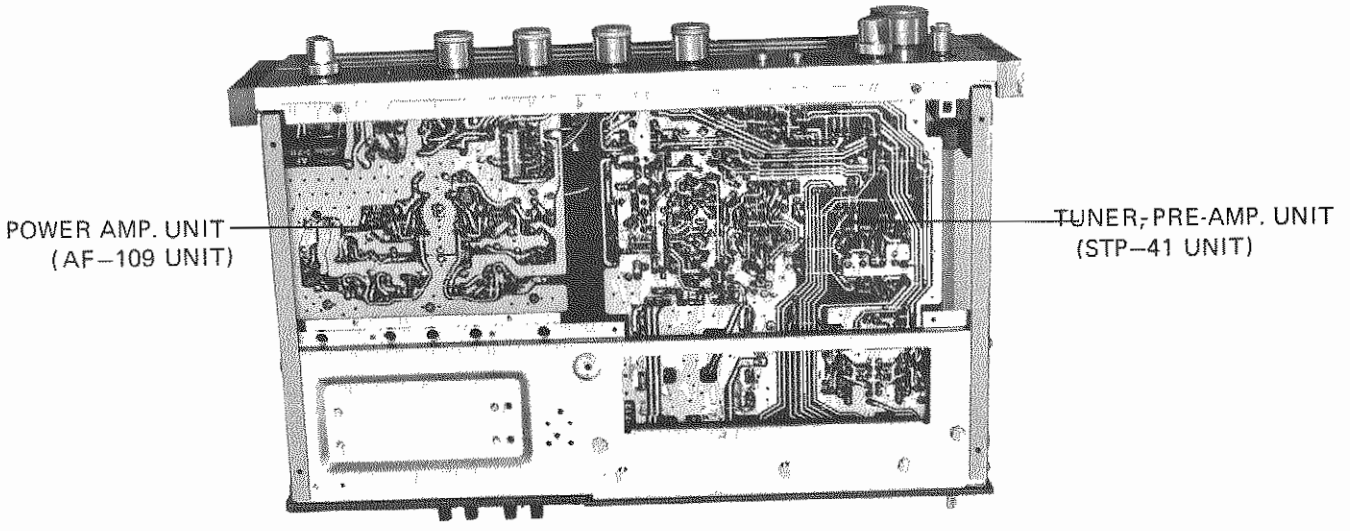

Figure 4.

3. DISASSEMBLY INSTRUCTIONS

3–1 BOTTOM BOARD REMOVAL

1. Remove the six screws ③
2. Open the bottom board to the direction ④

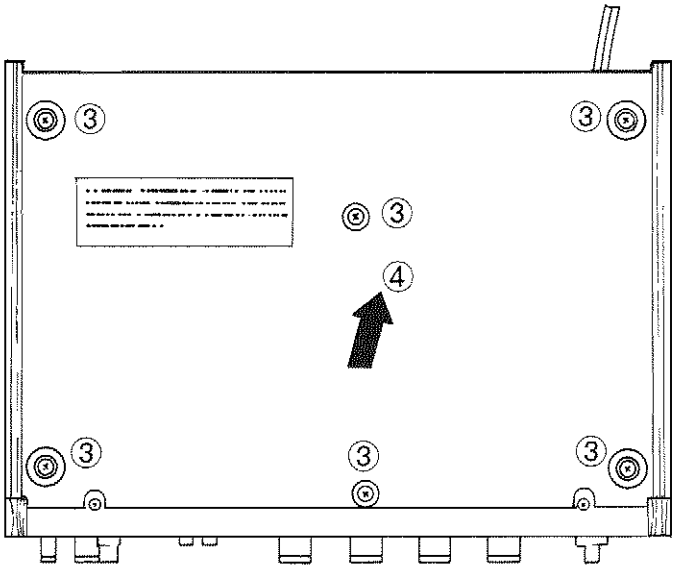

Figure 5.

3–2 CABINET REMOVAL

1. Remove the four screws ①
2. Open the cabinet to the direction ②

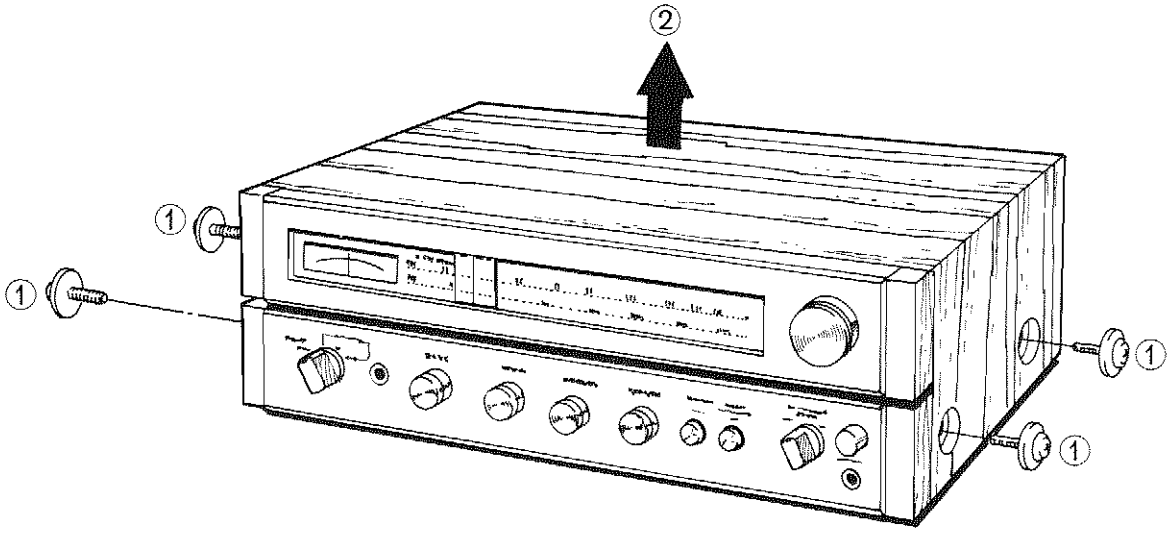

Figure 6.

4. TECHNICAL POINTS

1. New mic-mixing circuit

The feed-in or feed-out operation is possible by the use of the independent microphone volume.

The mixing position can be changed from right to left or center as desired.

Recording of mixing signal is possible (refer to "Mic-mixing" in owner's manual).

2. High Performance FM Tuner

FET FM front end has 2.3 μV IHF usable sensitivity for good reception of weak stations, plus great overload resistance for strong signal areas.

3. High reliability PLL MPX IC

Being incroporated PLL IC in FM tuner MPX circuit, there is no characteristic deterioration caused by the change of temperature or humidity or aging.

4. Pure Complementary Circuit system

The difference between the Pure Complementary Circuit and the Quasi Complementary Circuit (Figure 7) is that the Darlington connections in the lower part are, as shown in the figure 8, connected to PNP-NPN for the Quasi Complementary Circuit and to PNP-PNP for the Pure Complementary Circuit. This difference results in the crossover distortion in the unit. Although the switching distortion is invitable with B class P-P amplifier, the Pure Complementary Circuit, where both upper and lower transistors are symmetrical each other and the action similar to A class action is provided.

5. No shield wire is used between input terminal and Function switch, etc. Accordingly, there is no stray capacity which is caused by using shield wiere, thereby preventing characteristic deterioration in high-pass field.

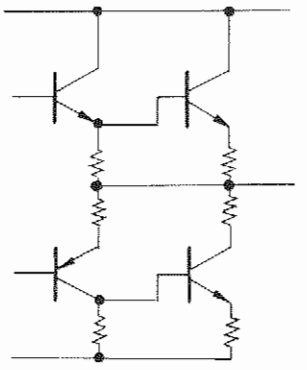

Quasi Complementary Circuit
(SA-20, SA-15)

Figure 7.

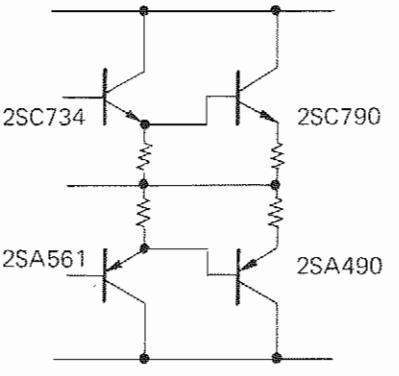

Pure Complementary Circuit
(SA-220C)

Figure 8.

5. CIRCUIT ADJUSTMENT

5–1 FM ADJUSTMENT

Test Equipments/Tools Required.
1. FM-IF Sweep Generator
2. FM Signal Generator
3. Dummy Load Resistor
4. VTVM
5. Oscilloscope

Step	Item	Oscillator	Input Terminal	Output Terminal	Adjustment	Remarks
1	I.F.T. alignment	10.7 MHz sweep generator	FM antenna terminal (J101, J102)	R215 FM TP-3	IT-101 L205	Adjust for the best waveform
2	Local oscillation alignment	FM signal generator 88 MHz (400 Hz mod.)	Antenna terminal	Connect oscilloscope & VTVM to speaker terminal	Local oscillator Coil L103	Adjust for maximum output indication
3	Local oscillation alignment	FM signal generator 108 MHz (400 Hz Mod.)	Antenna terminal	Connect oscilloscope & VTVM to pseaker terminal	Local oscillator trimmer TC103	Adjust for maximum output indication
4	Repeat steps 2 & 3					
5	High frequency amplifing circuit	FM signal generator 88 MHz (400 Hz Mod.)	Antenna terminal	Connect oscilloscope & VTVM to speaker terminal	RF coil L102	Adjust for maximum output indication
6	High frequency amplifing circuit	FM signal generator 108 MHz (400 Hz Mod.)	Antenna terminal	Connect oscilloscope & VTVM to speaker terminal	Antenna trimmer TC101, TC102	Adjust for maximum output indication
7	Repeat steps 5 & 6		Note: Minimize the level of signal generator as possible			

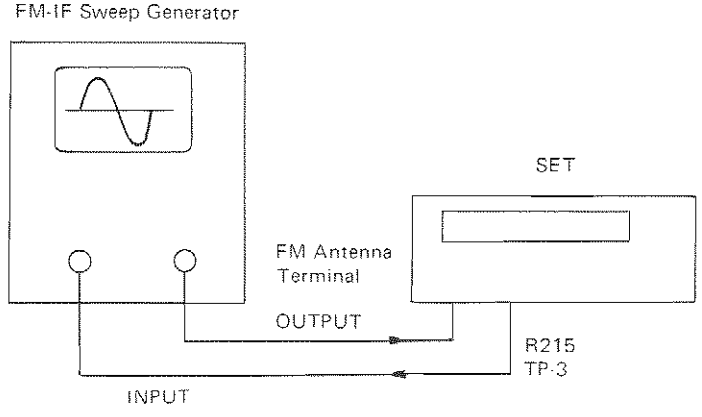

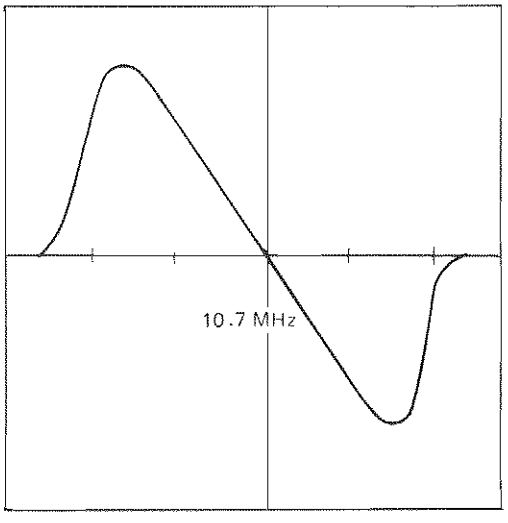

FM Discriminator Curve

Figure 9.

FM MPX ADJUSTMENT

Set the function switch to FM-AUTO and connect frequency counter to TP-1, then adjust the semi-fixed resister R302 so that the reading on frequency counter is 19 kHz.

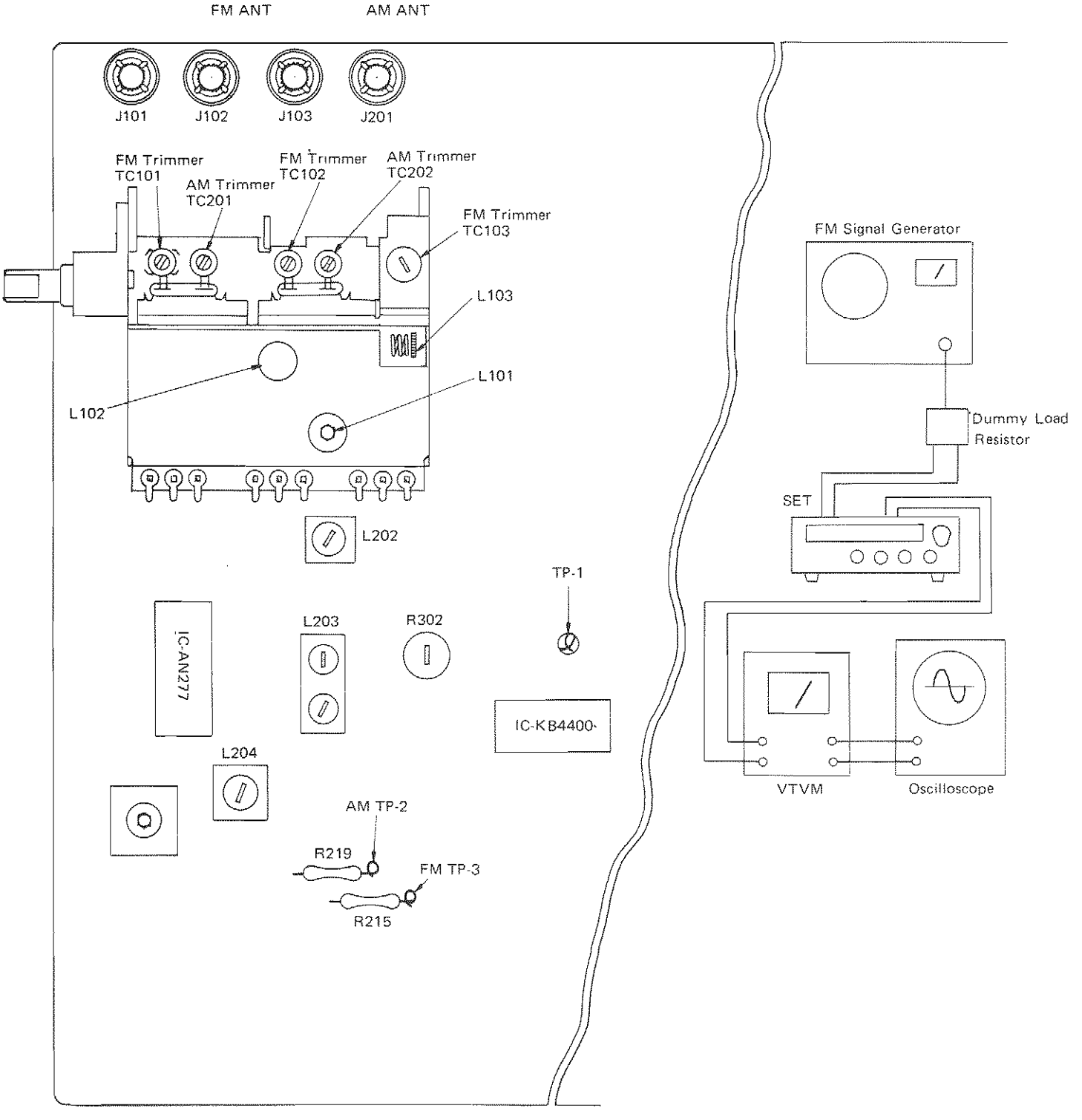

Figure 10.

5–2 AM ADJUSTMENT

Test Equipments/Tools Required

1. AM Signal Generator
2. Test Loop Antenna
3. VTVM
4. Oscilloscope
5. AM-IF Sweep Generator

Step	Item	Oscillator	Input Terminal	Output Terminal	Adjustment	Remarks
1	I.F.T. alignment	455 KHz sweep generator	Antenna terminal (J201)	R219 AM TP-2	L203 & L204	Adjust for the best waveform
2	Local oscillation alignment	AM signal generator 600 KHz (400 Hz 30% Mod.)	Antenna terminal (J201)	Connect Oscilloscope & VTVM to speaker terminal	Local oscillator Coil L202	Adjust for maximum output indication
3	Local oscillation alignment	AM signal generator 1400 KHz (400 Hz 30% Mod.)	Antenna terminal	Connect oscilloscope & VTVM to speaker terminal	Local oscillator trimmer TC-202	Adjust for maximum output indication
4	Repeat steps 2 & 3					
5	High frequency Amplifing circuit	AM signal generator 600 KHz (400 Hz 30% Mod.)	Antenna terminal	Connect oscilloscope & VTVM to speaker terminal	Ferrite antenna L201	Adjust for maximum output indication
6	High frequency Amplifing circuit	AM signal generator 1400 KHz (400 Hz 30% Mod.)	Antenna terminal	Connect oscilloscope & VTVM to speaker terminal	Antenna terminal TC201	Adjust for maximum output indication
7	Repeat steps 5 & 6					

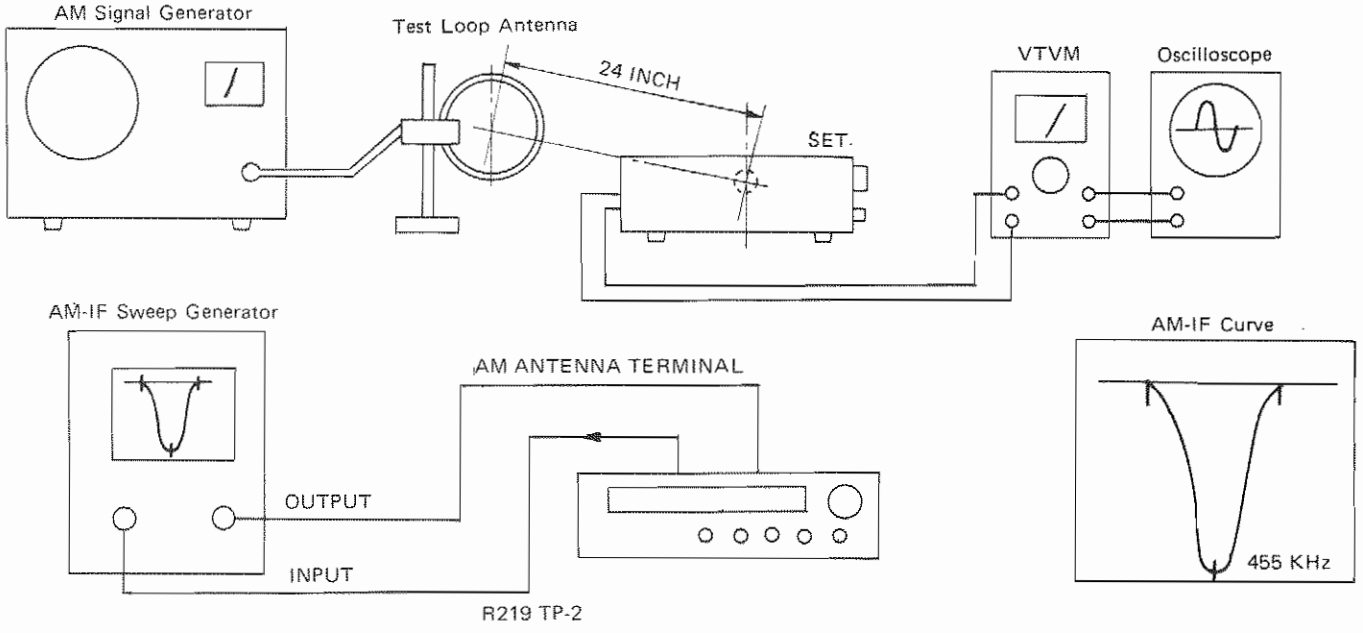

Figure 11.

6. DIAL CORD STRINGING

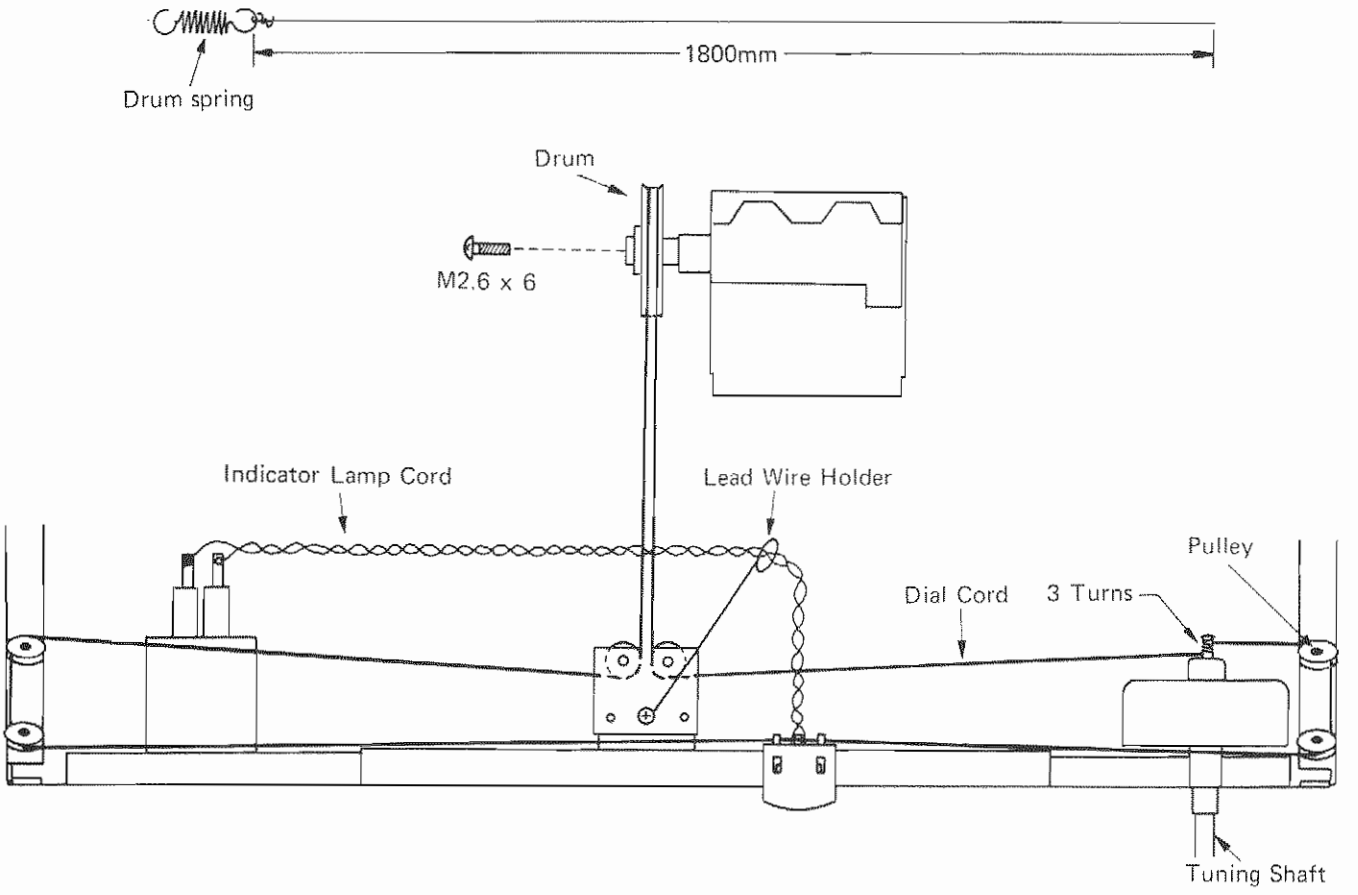

Figure 12.

7. ELECTRICAL PARTS LOCATIONS

7–1 BOTTOM VIEW OF MIC AMP. P.C. BOARD (AF–110 UNIT)

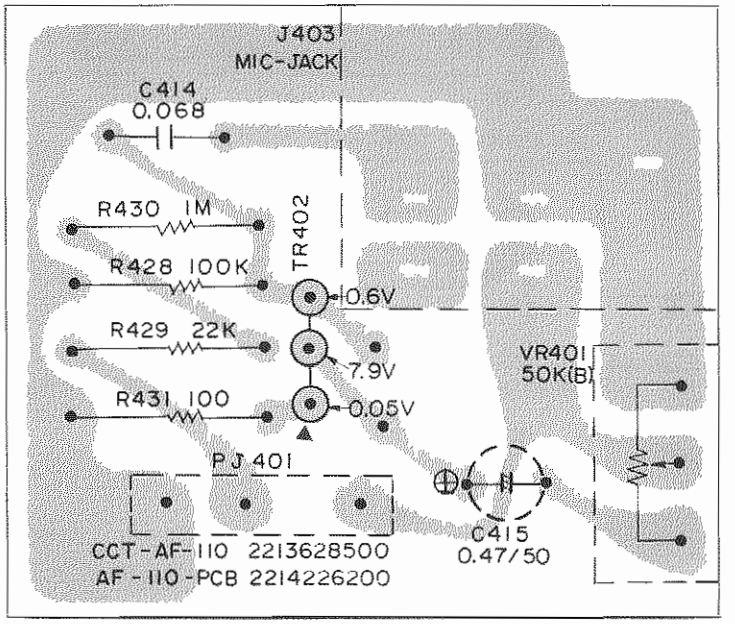

7–2 BOTTOM VIEW OF POWER AMP. AND POWER SUPPLY P.C. BOARD (AF–109 UNIT)

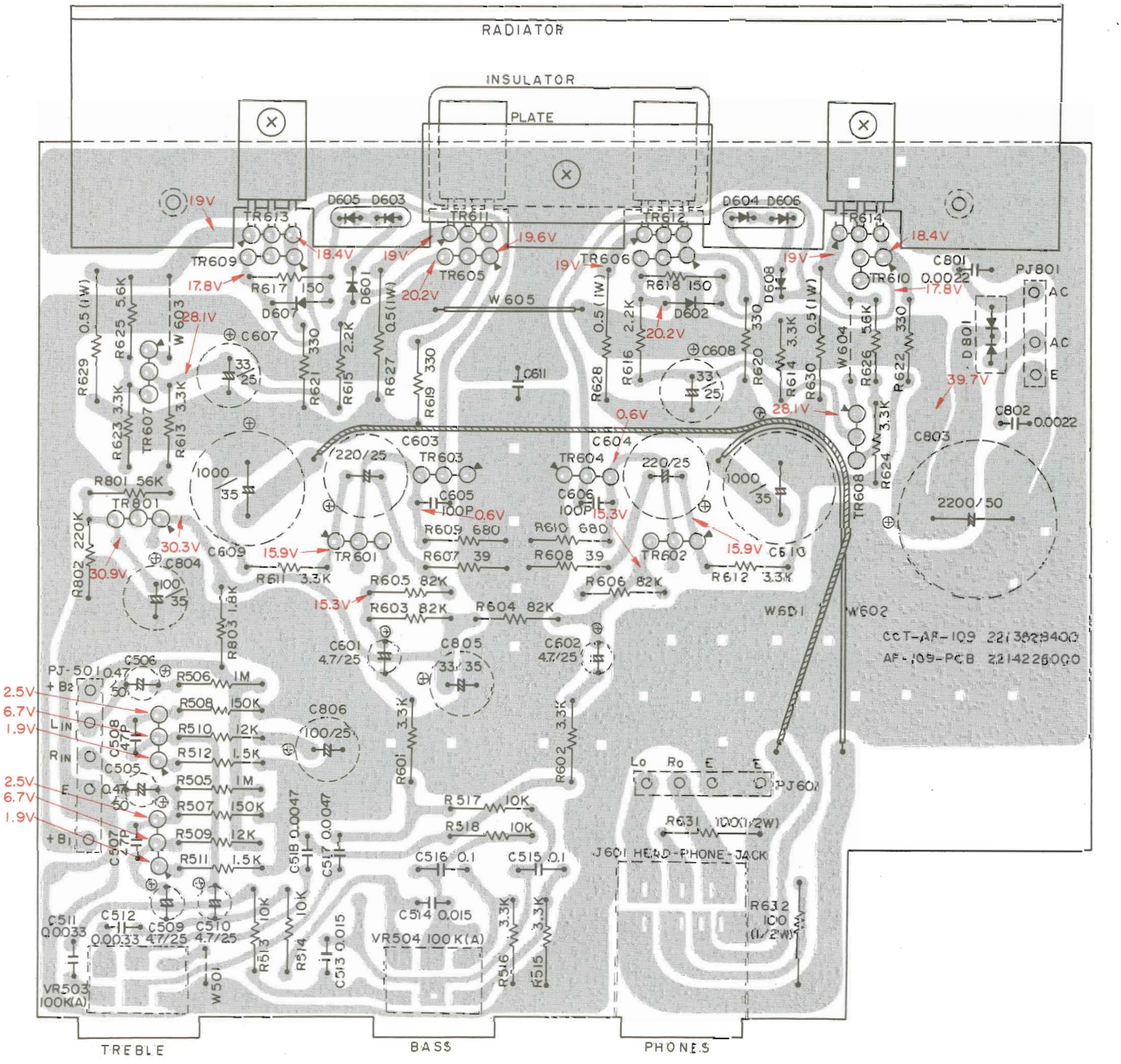

7–3 BOTTOM VIEW OF TUNER, PRE-AMP. AND CONTROL AMP. P.C. BOARD (STP–41 UNIT)

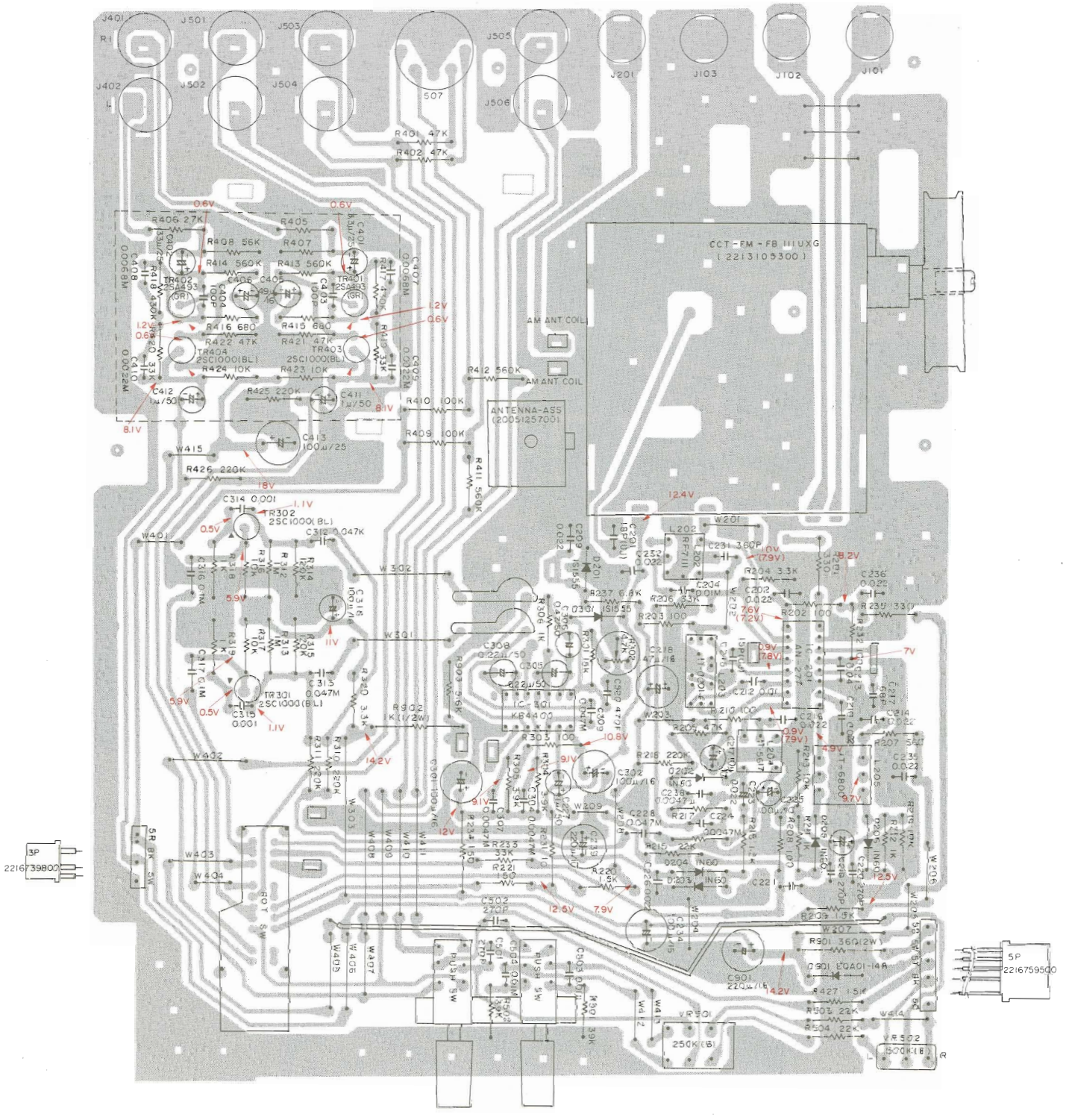

8. BLOCK DIAGRAM

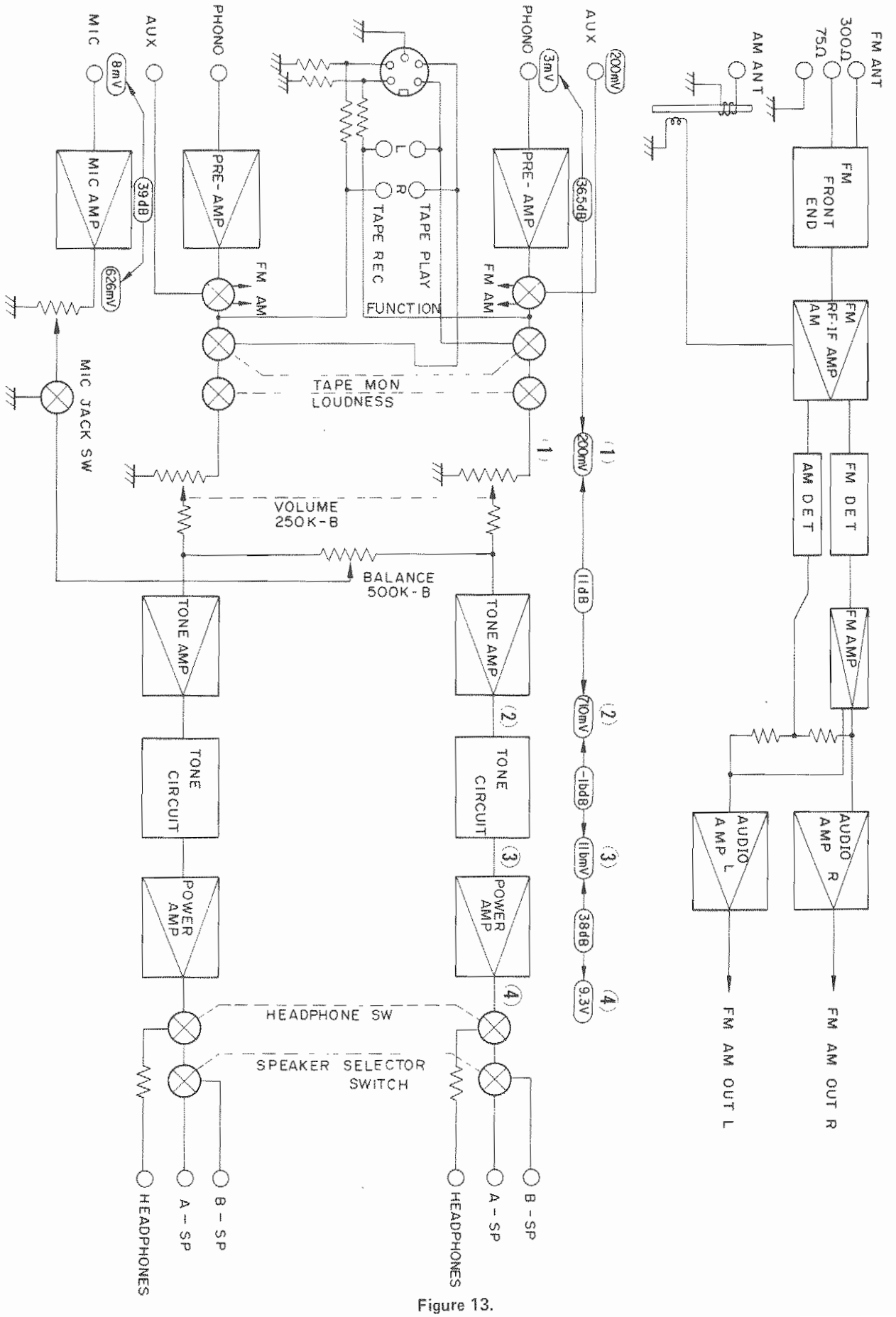

Figure 13.

9. SEMICONDUCTOR BASE DIAGRAMS

2SC1000-BL
2SC734-Y
2SA561-Y
2SA493-GR

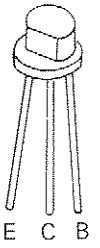

E: Emitter
C: Collector
B: Base

2SC790-Y
2SA490-Y

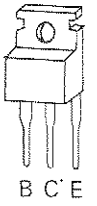

E: Emitter
C: Collector
B: Base

KB 4400

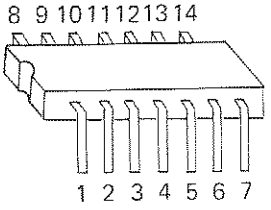

AN-277

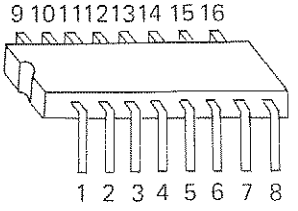

Figure 14.

10. SCHEMATIC DIAGRAM

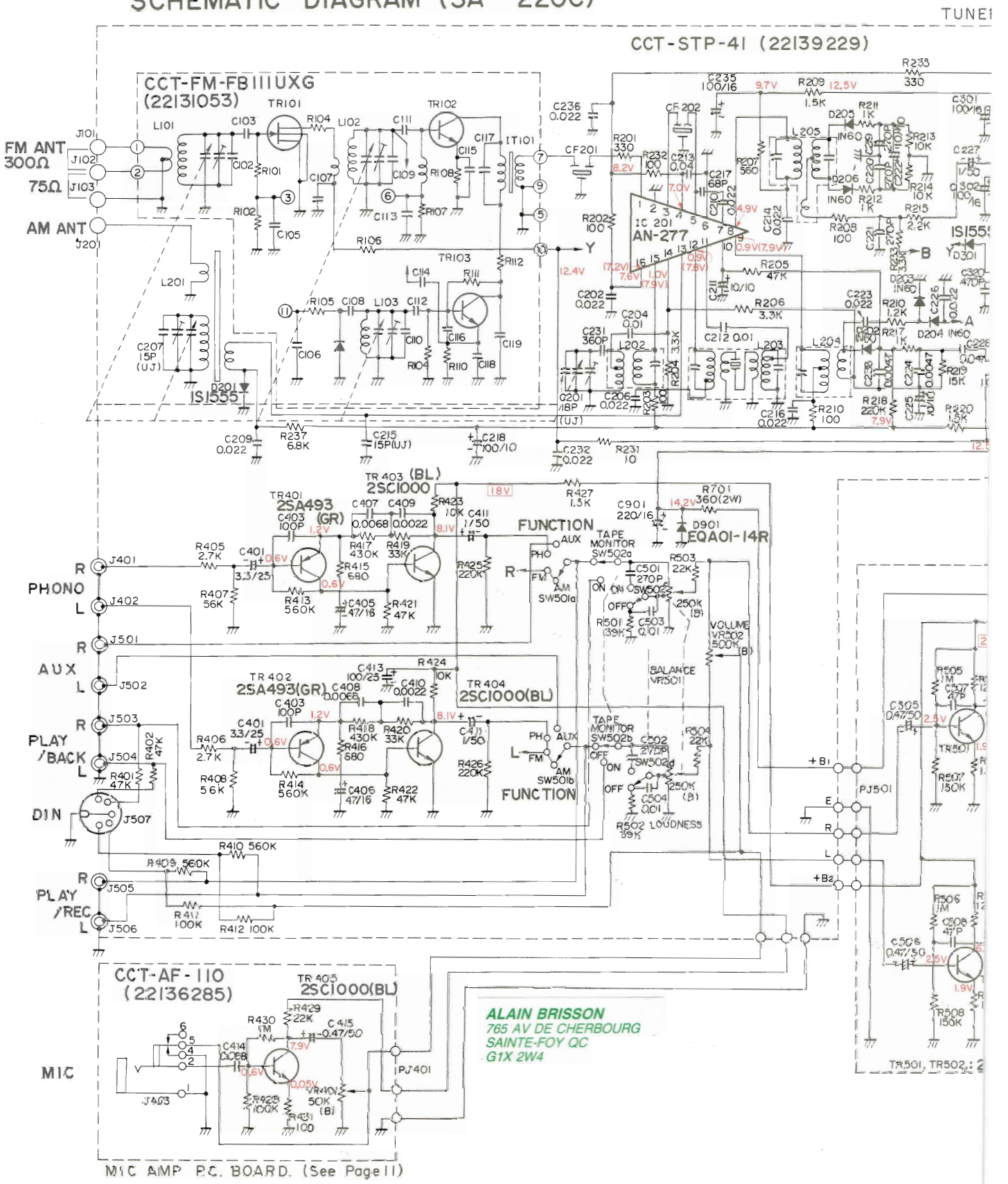

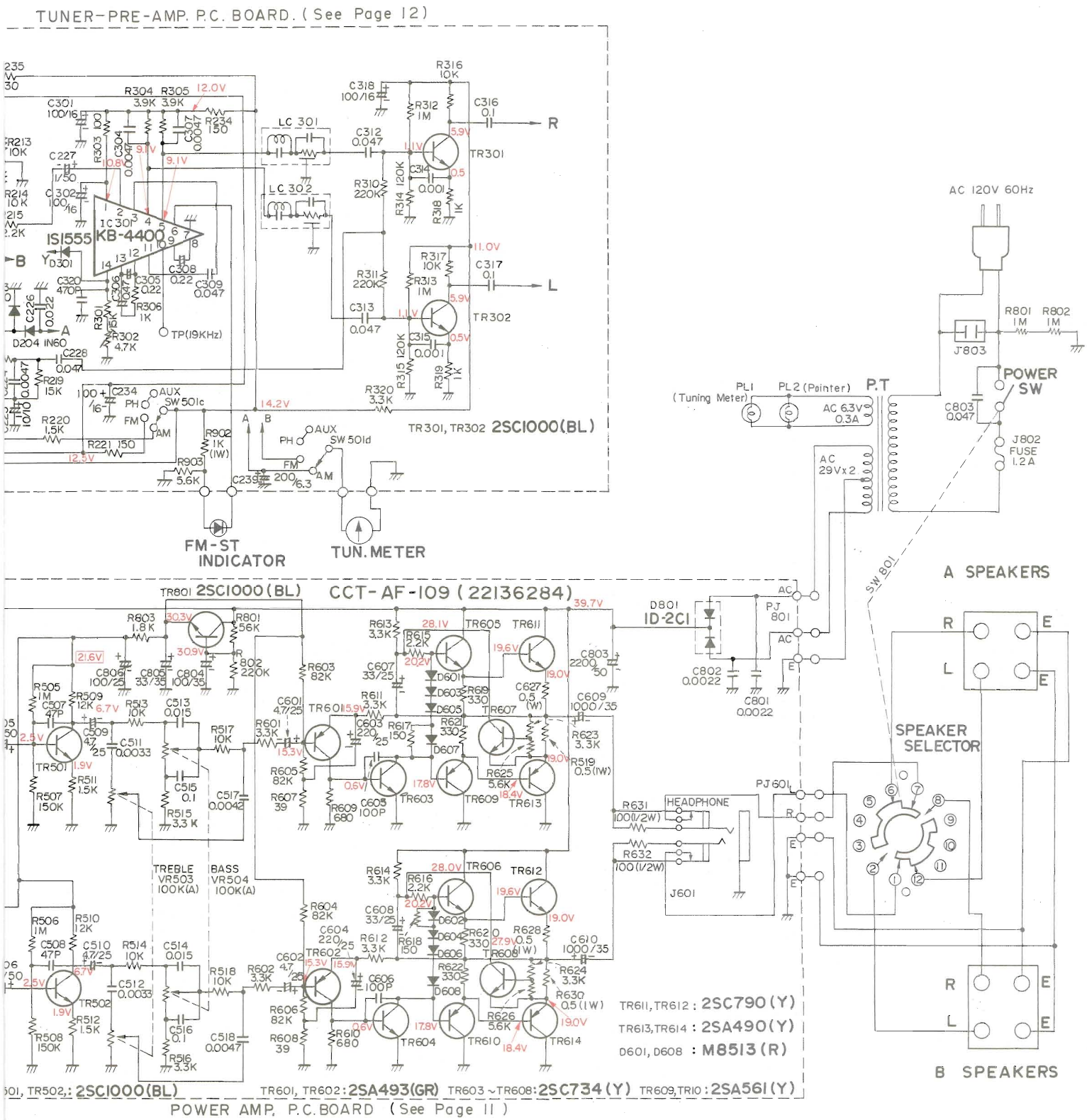
TUNER-PRE-AMP. P.C. BOARD. (See Page 12)
TR301, TR302 2SC1000(BL)
FM-ST INDICATOR
TUN. METER
TR801 2SC1000(BL)
CCT-AF-109 (22136284)
TREBLE VR503 100K(A)
BASS VR504 100K(A)
TR611, TR612 : 2SC790(Y)
TR613, TR614 : 2SA490(Y)
D601, D608 : M8513(R)
TR601, TR602 : 2SA493(GR)
TR603 ~ TR608 : 2SC734(Y)
TR609, TR10 : 2SA561(Y)
POWER AMP. P.C. BOARD (See Page 11)
AC 120V 60Hz
POWER SW
J802 FUSE 1.2A
PL1 (Tuning Meter)
PL2 (Pointer)
P.T
AC 6.3V 0.3A
AC 29V x 2
SW 801
A SPEAKERS
SPEAKER SELECTOR
B SPEAKERS
HEADPHONE
J601
PJ 601
D801 ID-2C1
PJ 801

11. EXPLODED VIEW

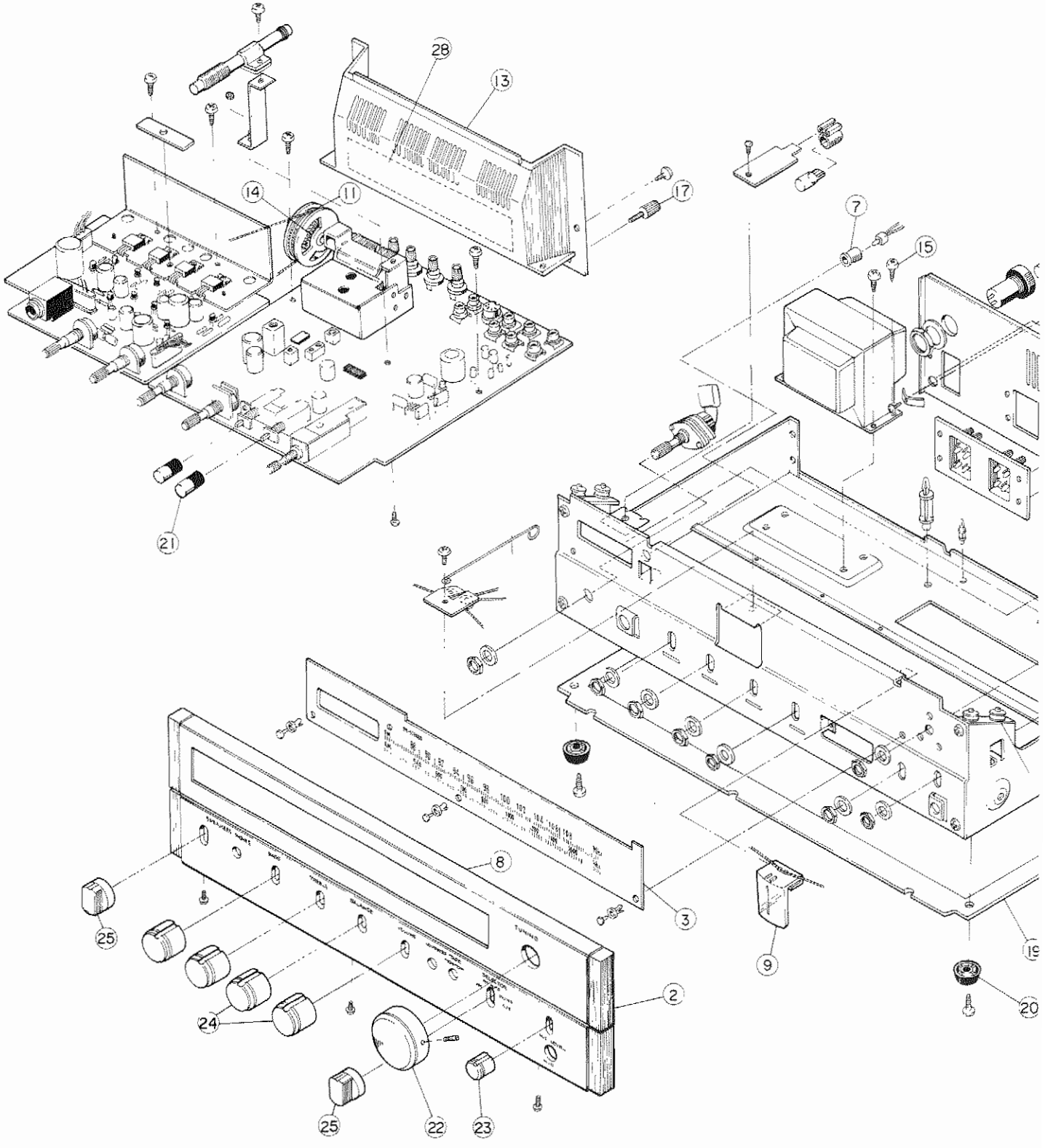

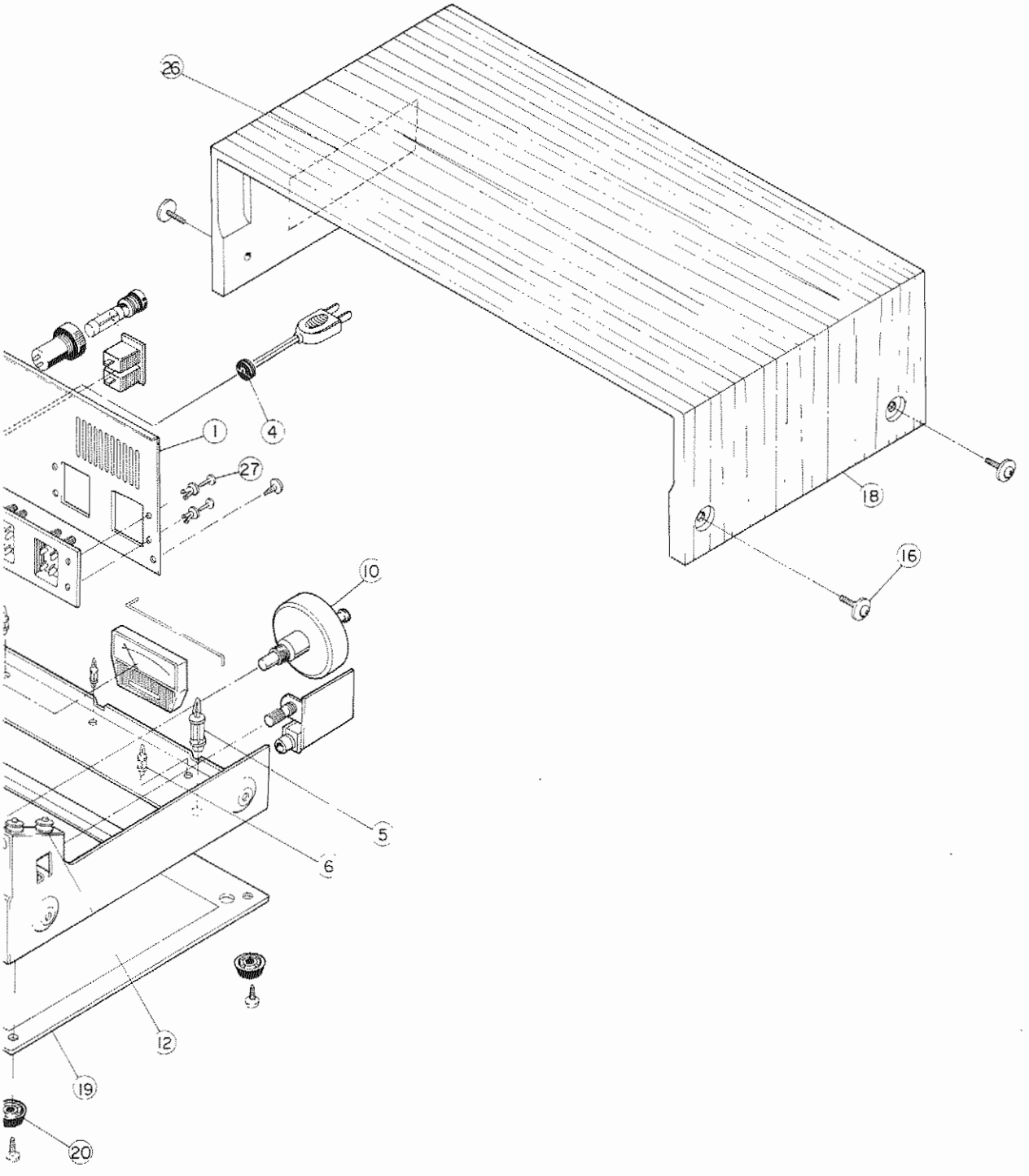
26
1
4
27
18
16
10
5
6
12
19
20

12. PARTS LIST

Key No.	Part No.	Description	Q'ty Set
		IC'S, TRANSISTORS & DIODES	
IC201	22114418	IC-AN277	1
IC301	22114419	IC-KB4400	1
TR613, 614	A6501860	Transistor, 2SA-490-Y	2
TR401, 402, 601, 602	A6502140	Transistor, 2SA-493-GR	4
TR609, 610	A6509040	Transistor, 2SA-561-Y	2
TR603, 604, 605, 606 607, 608	A6733460	Transistor, 2SC-734-Y	6
TR611, 612	A6738560	Transistor, 2SC-790-Y	2
TR301, 302, 403, 404, 405, 501, 502, 801	A6754150	Transistor, 2SC-1000-BL	8
D202, 203, 204, 205, 206	A7000900	Diode, 1N60	5
D201, 301	A7246703	Diode, 1S1555-V	2
D601, 602, 603, 604, 605, 606, 607, 608	A7316179	Diode, M8513A-R	8
D801	A7682020	Diode, 1D-2C1	1
	A8618000	Diode, S8302	1
D901	22115218	Diode, EQB01-14R	1
		COIL & TRANSFORMERS	
	22213462	Power Transformer, PT-7019	1
L202	22245206	OSC Coil, RT-7111	1
L204	22264617	IF-Transformer, IT-5617	1
L203	22264641	IF-Transformer, IT-0001-F	1
L205	22267305	IF-Transformer, IT-6800	1
		CAPACITORS pf = pico farad mfd = micro farad	
C314, 315	22341102	Ceramic, 0.001 mfd, 50V	2
C212	22341103	Ceramic, 0.01 mfd, 50V	1
C202, 206, 209, 210, 213, 214, 216, 223, 226, 232, 236	22341223	Ceramic, 0.022 mfd, 50V	11
C611, 803, 804	22343222	Ceramic, 2200 pf, 50V	3
C207, 215	22360177	Ceramic, 15 pf, 50V	2
C201	22360264	Ceramic, 18 pf, 50V	1
C403, 404 605, 606	22362101	Ceramic, 100 pf, 50V	4
C219, 220, 221, 501, 502	22362271	Ceramic, 270 pf, 50V	5
C507, 508	22362470	Ceramic, 47 pf, 50V	2
C320	22362471	Ceramic, 470 pf, 50V	1
C217	22362680	Ceramic, 68 pf, 50V	1
C228	22310019	Mylar, 0.047 mfd, 200V	1
C231	22321016	Mylar, 360 pf, 50V	1
C515, 516	22372104	Mylar, 0.1 mfd, 50V	2
C513, 514	22372153	Mylar, 0.015 mfd, 50V	2
C409, 410	22372222	Mylar, 2200 pf, 50V	2
C511, 512	22372332	Mylar, 3300 pf, 50V	2
C517, 518	22372472	Mylar, 4700 pf, 50V	2
C407, 408	22372682	Mylar, 6800 pf, 50V	2

Key No.	Part No.	Description	Q'ty Set
C204, 503, 504	22373103	Mylar, 0.01 mfd, 50V	3
C316, 317	22373104	Mylar, 0.1 mfd, 50V	2
C224, 238 304, 307	22373472	Mylar, 4700 pf, 50V	4
C228, 309, 312, 313	22373473	Mylar, 0.047 mfd, 50V	4
C414	22373683	Mylar, 0.068 mfd, 50%	1
C305, 308	22403053	Electrolytic, 0.22 mfd, 50V	2
C306	22403054	Electrolytic, 0.47 mfd, 50V	1
C401, 402	22440031	Electrolytic, 3.3 mfd, 50V	2
C609, 610	22440033	Electrolytic, 1000 mfd, 35V	2
C803	22440105	Electrolytic, 2200 mfd, 50V	1
C239	22442101	Electrolytic, 100 mfd, 6.3V	1
C218, 235	22443101	Electrolytic, 100 mfd, 10V	2
C318	22443221	Electrolytic, 220 mfd, 10V	1
C211, 222, 225	22445100	Electrolytic, 10 mfd, 16V	3
C234, 301, 302	22445101	Electrolytic, 100 mfd, 16V	3
C901	22445221	Electrolytic, 220 mfd, 16V	1
C405, 406	22445470	Electrolytic, 47 mfd, 16V	2
C413, 806	22446101	Electrolytic, 100 mfd, 25V	2
C603, 604	22446221	Electrolytic, 220 mfd, 25V	2
C607, 608	22446330	Electrolytic, 33 mfd, 25V	2
C509, 510, 601, 602	22446479	Electrolytic, 4.7 mfd, 25V	4
C804	22447101	Electrolytic, 100 mfd, 35V	1
C805	22447330	Electrolytic, 33 mfd, 35V	1
C227, 411, 412	22448109	Electrolytic, 1.0 mfd, 50V	3
C415, 505, 506	22448478	Electrolytic, 0.47 mfd, 50V	3
		RESISTORS	
R231	22545100	Carbon film, 10 ohm, 1/4W	1
R202, 203, 208, 210, 232, 303 409, 410, 431	22545101	Carbon film, 100 ohm, 1/4W	9
R211, 212, 217, 306	22545102	Carbon film, 1K ohm, 1/4W	4
R213, 316, 317, 318, 319, 423, 424, 513, 514, 517, 518	22545103	Carbon film, 10K ohm, 1/4W	11
R411, 412, 428	22545104	Carbon film, 100K ohm, 1/4W	3
R430, 505, 506	22545105	Carbon film, 1M ohm, 1/4W	3
R216	22545122	Carbon film, 1.2K ohm, 1/4W	1
R509, 510	22545123	Carbon film, 12K ohm, 1/4W	2
R314, 315	22545124	Carbon film, 120K ohm, 1/4W	2
R221, 617, 618	22545151	Carbon film, 150 ohm, 1/4W	3
R209, 220, 233, 234, 427, 511, 512	22545152	Carbon film, 1.5K ohm, 1/4W	7
R219, 301	22545153	Carbon film, 15K ohm, 1/4W	2
R507, 508	22545154	Carbon film, 150K ohm, 1/4W	2
R803	22545182	Carbon film, 1.8K ohm, 1/4W	1

Key No.	Part No.	Description	Q'ty Set
R215, 615, 616, 623, 624	22545222	Carbon film, 2.2K ohm, 1/4W	5
R429, 503, 504	22545223	Carbon film, 22K ohm, 1/4W	3
R218, 310, 311, 425, 426, 802	22545224	Carbon film, 220K ohm, 1/4W	6
R405, 406	22545272	Carbon film, 2.7K ohm, 1/4W	2
R201, 235, 619, 620, 621, 622	22545331	Carbon film, 330 ohm, 1/4W	6
R204, 206, 320, 515, 516, 601, 602, 611, 612, 613, 614	22545332	Carbon film, 3.3K ohm, 1/4W	11
R419, 420	22545333	Carbon film, 33K ohm, 1/4W	2
R607, 608	22545390	Carbon film, 39K ohm, 1/4W	2
R304, 305	22545392	Carbon film, 3.9K ohm, 1/4W	2
R501, 502	22545393	Carbon film, 39K ohm, 1/4W	2
R417, 418	22545434	Carbon film, 430K ohm, 1/4W	2
R205, 401, 402, 421, 422	22545473	Carbon film, 47K ohm, 1/4W	5
R207	22545561	Carbon film, 560 ohm, 1/4W	1
R625, 626, 903	22545562	Carbon film, 5.6K ohm, 1/4W	3
R407, 408, 801	22545563	Carbon film, 56K ohm, 1/4W	3
R413, 414	22545564	Carbon film, 560K ohm, 1/4W	2
R415, 416, 609, 610	22545681	Carbon film, 680K ohm, 1/4W	4
R214, 237	22545682	Carbon film, 6.8K ohm, 1/4W	2
R603, 604, 605, 606	22545683	Carbon film, 68K ohm, 1/4W	4
R609, 610	22563101	Carbon composition, 100 ohm, 1/2W	2
R902	22563102	Carbon composition, 1K ohm, 1/2W	1
R627, 628 629, 630	22570042	Metal Oxide Film, 0.5 ohm, 1W	4
R901	22570068	Metal Oxide Film, 360 ohm, 2W	1
VR401	22622016	Variable Resistor, Mic, 50K ohm, (B)	1
VR501	22622017	Variable Resistor, 250K ohm	1
VR502	22622018	Variable Resistor, Balance, 500K ohm	1
VR503, 504	22627009	Variable Resistor, Tone, 100K ohm, (A)	2
R302	22658318	Semi-Fixed Resistor,4.7K ohm	1
		UNITS	
	22139229	Tuner, Pre-amp. and Control Amp. (CCT-STP-41)	1
	22136284	Power Amp., and Power Supply (CCT-AF-109)	1
	22136285	Mic Amp. (CCT-AF-110)	1
		ELECTRICAL PARTS	
	22104284	Tuning Meter	1
	22113150	Wedge base lamp	1
	22113374	Indicator lamp (FM)	1
	22116066	Wedge base socket	1

Key No.	Part No.	Description	Q'ty Set
	22131053	FM Front-end (CCT-FM-FB111UGX)	1
LC301, 302	22134071	RLC Module	2
	22144276	UL Fuse (1.2A)	1
	22146083	Rotary Switch (Power)	1
	22146084	Push Switch	1
	22146089	Rotary Switch (Select)	1
CF201, 202	22153023	Ceramic Filter	2
	22162339	Speaker Terminal (8P)	1
	22162345	Antenna Terminal	4
J601	22613426	Headphone Jack	1
J403	22163505	Mic Jack	1
	22163506	Pin Jack (White)	4
	22163529	Pin Jack (Red)	4
PJ401,PJ801	22164377	Plug-3P	2
PJ601	22164378	Plug-4P	1
PJ501	22164379	Plug-5P	1
	22165063	Fuse Holder	1
	22167398	3P Socket	1
	22167453	AC Socket	1
	22167483	Din Socket	1
	22167589	4P Socket	1
	22167595	5P Socket	1
	22176221	UL Plug-Cord	1
	22242528	Ferrite Antenna, FA-1013	1
		ACCESSORIES	
	20951237	Owner's Manual	1
	22957189	Warranty Card (TA)	1
	22100021	Warranty Card (TC)	1
	22124223	FM Antenna	1
	22164156	US Pin Plug	2
		MECHANICAL PARTS	
1	20015098	Jack plate	1
2	20017091	Panel-assembly	1
3	20019076	Dial Scale	1
4	20021170	Cord bushing	1
5	20022048	PC Board Holder 16L	2
6	20022049	PC Board Holder 8L	3
7	20031039	Lamp Cover	1
8	20033069	Dial Cover	1
9	20041046	Pointer-assembly	1
10	20041048	Tuning Shaft	1
11	20042057	Drum, 200L	1
12	20042058	Pulley	6
13	20031037	Cover, (Pin Jack, Terminal)	1
14	20866009	Dial Spring	1
15	20794085	Screw, (4x8L Power Transformer Mounting)	4
16	20794119	Screw, 4x16L	6
17	20794122	Screw, 3x10L (Ground)	1
18	20816225	Wood Cabinet	1
19	20822037	Board-assembly	1
20	20842069	Leg	4
21	20871207	Knob, Push	2
22	20871241	Knob, Tuning	1
23	20871242	Knob, Mic	1
24	22826124	Knob, Tone	4
25	22826125	Knob, Select	2
26	22950592	Caution Label	1
27	22705022	Rivet, 3x5.5	4
28	20953249	Instruction Label, (Pin Jack, Terminal)	1

TOSHIBA

MANUFACTURED BY
TOKYO SHIBAURA ELECTRIC CO., LTD.
2-1, GINZA 5-CHOME, CHUO-KU, TOKYO 104, JAPAN
CABLE:TOSHIBAGNZ TOKYO, TELEX NO.: J24681, J24682, J24683

22951256 OCT. '75 PRINTED IN JAPAN