Ref. No. 3565

ONKYO® SERVICE MANUAL

AUDIO VIDEO CONTROL RECEIVER MODEL TX-8511

Black model

BMD	120V AC, 60Hz
BMP	230V AC, 50Hz
BMP/BMWT	120V / 220-230V AC, 50/60Hz

SAFETY-RELATED COMPONENT WARNING!!

COMPONENTS IDENTIFIED BY MARK ⚠ ON THE SCHEMATIC DIAGRAM AND IN THE PARTS LIST ARE CRITICAL FOR RISK OF FIRE AND ELECTRIC SHOCK. REPLACE THESE COMPONENTS WITH ONKYO PARTS WHOSE PARTS NUMBERS APPEAR AS SHOWN IN THIS MANUAL.

MAKE LEAKAGE-CURRENT OR RESISTANCE MEASUREMENTS TO DETERMINE THAT EXPOSED PARTS ARE ACCEPTABLY INSULATED FROM THE SUPPLY CIRCUIT BEFORE RETURNING THE APPLIANCE TO THE CUSTOMER.

CONTENTS

SPECIFICATIONS 2
SERVICE PROCEDURES 3
EXPLODED VIEW 4
PARTS LIST 5
BLOCK DIAGRAMS 6
MICROPROCESSOR CONNECTION DIAGRAM 8
MICROPROCESSOR TERMINAL DESCRIPTION 9
IC BLOCK DIAGRAMS AND DESCRITION 10
PACKING VIEW /PARTS LIST 13
ADJUSTMENT PROCEDURES 14
PRINTED CIRCUIT BOARD VIEWFROM BOTTOM SIDE 17
PRINTED CIRCUIT BOARD-PARTS LIST 22
SCHEMATIC DIAGRAMS 25

ONKYO®
AUDIO COMPONENTS

SPECIFICATIONS

AMPLIFIER SECTION

Power Output:
- USA & Canadian models: 100 Watts per channel, min RMS, at 8 ohms, both channels driven from 20 Hz to 20 kHz, with no more than 0.08% THD.
- European models: 2 × 100 Watts at 4 ohms, 1 kHz (DIN)
- Asian models: 2 × 130 Watts at 4 ohms, 1 kHz (EIAJ)

Dynamic power output:
- USA & Canadian models: 2 × 170 Watts at 2 ohms; 2 × 135 Watts at 4 ohms; 2 × 140 Watts at 8 ohms
- Other area models: 2 × 145 Watts at 2ohms; 2 × 120 Watts at 4 ohms; 2 × 75 Watts at 8 ohms

Total Harmonic Distortion: 0.08% at rated power; 0.08% at 1watt output

IM Distortion: 0.08% at rated power; 0.08% at 1watt output

Damping Factor: 60 at 8 ohms

Input Sensitivity and Impedance:
- PHONO: 2.5 mV, 50 kohms
- Line (CD, TAPE-1, 2, VIDEO-1, 2): 150 mV, 50 kohms
- Video (VIDEO-1, 2): 1 Vp-p, 75 ohms

Output Level and Impedance:
- Rec out (TAPE-1, 2): 150 mV, 2.2 kohms
- out (VIDEO-2): 150 mV, 2.2 kohms
- Video (VIDEO-2, MONITOR): 1 Vp-p, 75 ohms

Phono Overload: 120 mV RMS. at 1,000 Hz, 0.5% THD.

Frequency Response: 20 to 30,000 Hz, ±1 dB

RIAA Deviation: 20 to 20,000 Hz, ±0.8 dB

Tone Control:
- BASS: ±10 dB at 100 Hz
- TREBLE: ±10 dB at 10,000 Hz

Signal to Noise Ratio:
- PHONO: 80 dB (IHF A, 5 mV input)
- CD/TAPE: 100 dB (IHF A)

Muting: – 50 dB

TUNER SECTION

FM:

Tuning Range:
- U.S. and Canadian models: 87.50 to 108.00 MHz (100 kHz steps)
- European and worldwide models: 87.50 to 108.00 MHz (50 kHz steps)

Usable Sensitivity: Mono: 11.2 dBf, 1.0 µV (75 ohms IHF) 0.9µV (75 ohms DIN); Stereo: 17.2 dBf, 2.0 µV (75 ohms IHF) 23 µV (75 ohm DIN)

50dB Quieting Sensitivity: Mono: 17.2 dBf, 2.0 µV (75 ohms); Stereo: 37.2 dBf, 20.0 µV (75 ohms)

Capture Ratio: 1.5 dB

Image Rejection Ratio:
- U.S. and Canadian models: 40 dB
- Other models: 85 dB

IF Rejection Ratio: 90 dB

Signal-to-Noise Ratio: Mono: 76 dB, IHF; Stereo: 70 dB, IHF

Alternate Channel Att. (± 400 kHz): Mono 55 dB, IHF

Selectivity: 55 dB DIN (±300 kHz 40 kHz Devi.)

AM Suppression Ratio: 50 dB

Total Harmonic Distortion: Mono: 0.15%; Stereo: 0.25%

Frequency Response: 30 to 15,000 Hz ±1.5 dB

Stereo Separation: 45 dB at 1,000 Hz; 30 dB at 100 to 10,000 Hz

Stereo Threshold: 17.2 dBf, 2.0 µV (75 ohms)

AM:

Tuning Range:
- U.S. and Canadian models: 530 to 1,710 kHz (10 kHz steps)
- European models: 522 to 1,611 kHz (9 kHz steps)
- Worldwide models: 530 to 1,710 kHz (10 kHz steps) 531 to 1,602 kHz (9 kHz steps)

Usable Sensitivity: 30 µV

Image Rejection Ratio: 40 dB

IF Rejection Ratio: 40 dB

Signal-to-Noise Ratio: 40 dB

Total Harmonic Distortion: 0.7%

GENERAL

Power Supply:
- U.S. and Canadian models: AC120 V, 60 Hz
- European and Australian models: AC230 V, 50 Hz
- Worldwide models: AC 220-230/120 V switchable, 50/60 Hz

Power Consumption:
- U.S. and Canadian models: 2.8 A
- Other models: 220 W

Dimensions (W × H × D): 435 × 150 × 322 mm; 17-1/8" × 5-7/8" × 12-11/16"

Weight: 8.9 kg, 19.6 lbs

REMOTE CONTROL RC-329S

Transmitter: Infrared

Signal range: Approx. 5 meters, 16 ft.

Power supply: Two "AA" batteries (1.5 V × 2)

Specifications and features are subject to change without notice.

SERVICE PROCEDURES

1. Replacing the fuses

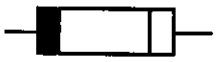

This symbol located near the fuse indicates that the fuse used is fast operating type. For continued protection against fire hazard, replace with same type fuse. For fuse rating refer to the marking adjacent to the symbol.

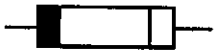

Ce symbole indique que le fusible utilise est a rapide. Pour une protection permanents, n'utiliser que des fusibles de meme type. Ce darnier est indique la qu le present symbol est appose.

Circuit No.	Part No.	Description
F901	252164	5A-UL/T-237 <D,WT>
F902	252075	2.5A-SE-EAK <P,PT,WT>
F903	252075	2.5A-SE-EAK <P,PT>

NOTE:
<D>: 120Vmodel only
<P>: 230V model only
<WT>: Taiwanese model onl
<PT>: Asian model only

2. To Initialize the unit

This device employs a microprocessor to perform various functions and operations. If interference generated by an extermal power supply, radio wave, or other electrical source results in accident which causes the specified operations and functions to operate abnormally.

To perform a reset, please follow the procedure below.

1. Press and hold down the VIDEO-1 button, then press the SPEAKER-A button.
2. After "clear" is displayed, the preset memory and each mode stored in then memory, such as surround, are initialized and will return to the factory settings.

3. Safety-check out

(Only U.S.A. model)

After correcting the original service problem, perform the following safety check before releasing the set to the customer.

Connect the insulating-resistance tester between the plug of power supply cord and the screw on the back panel.

Specifications : 3.3Mohm±10% at 500V.

4. Change of voltage

Worldwide models are equipped with a voltage selector to conform to local power supplies. This switch is located or the back panel.

Be sure to set this switch to match the voltage of the power supply in your area before turning the the power switch or This switch is set to 220-230V at the factory. Voltage is changed by sliding the groove in the switch with the screwdriver to the right or left. Confirm that the switch ha been moved all the way to the right or left before turning t power switch on.

VOLTAGE SELECTOR

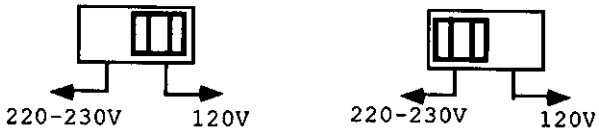

at AC 120V at AC 220-230

5. Memory preservation

This unit does not require memory preservation batteries.

A built-in memory power back-up system preserves contents of the memory during power failures and even when the unit is unplugged.

The unit must be plugged in and the power switch turned on and off once in order to charge the back-up system. Note that since this is not a permanent memory, the power switch must be turned on and off a few times each month the keep the back-up system operative.

The period of the time during which memory contents are preserved after power has last been turned off varies depending on climate and placement of the unit. On the average, memory contents are protected over a period of 3 to 4 weeks (a minimum of 2 weeks) after the last time power has been turned off. This period is shorted when the unit is exposed to very high humidity or used in an area with an extremely humid climate.

6. Setting the tuning step frequency

Worldwide models are equipped with a step band selector swich. This swich is located on the back papnel. This switch is set to 9 kHz at the factory, but may have to be reset to 10 kHz depending on the area where the unit is used.

AM band step
Oher area: 9 kHz
U.S.A. & Canada: 10 kHz

TUNER FREQ.

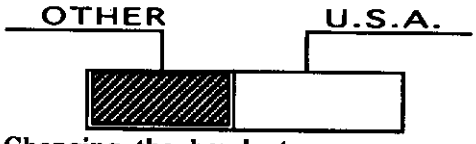

7. Changing the band step.

With the exception of the worldwide models, a tuning step selector switch is not provided. When you change the band step, change the parts as shown below.

	To 10 kHz	To 9 kHz
R727	Remove	10 ohm
R724	10K ohm	Remove

EXPLODED VIEW

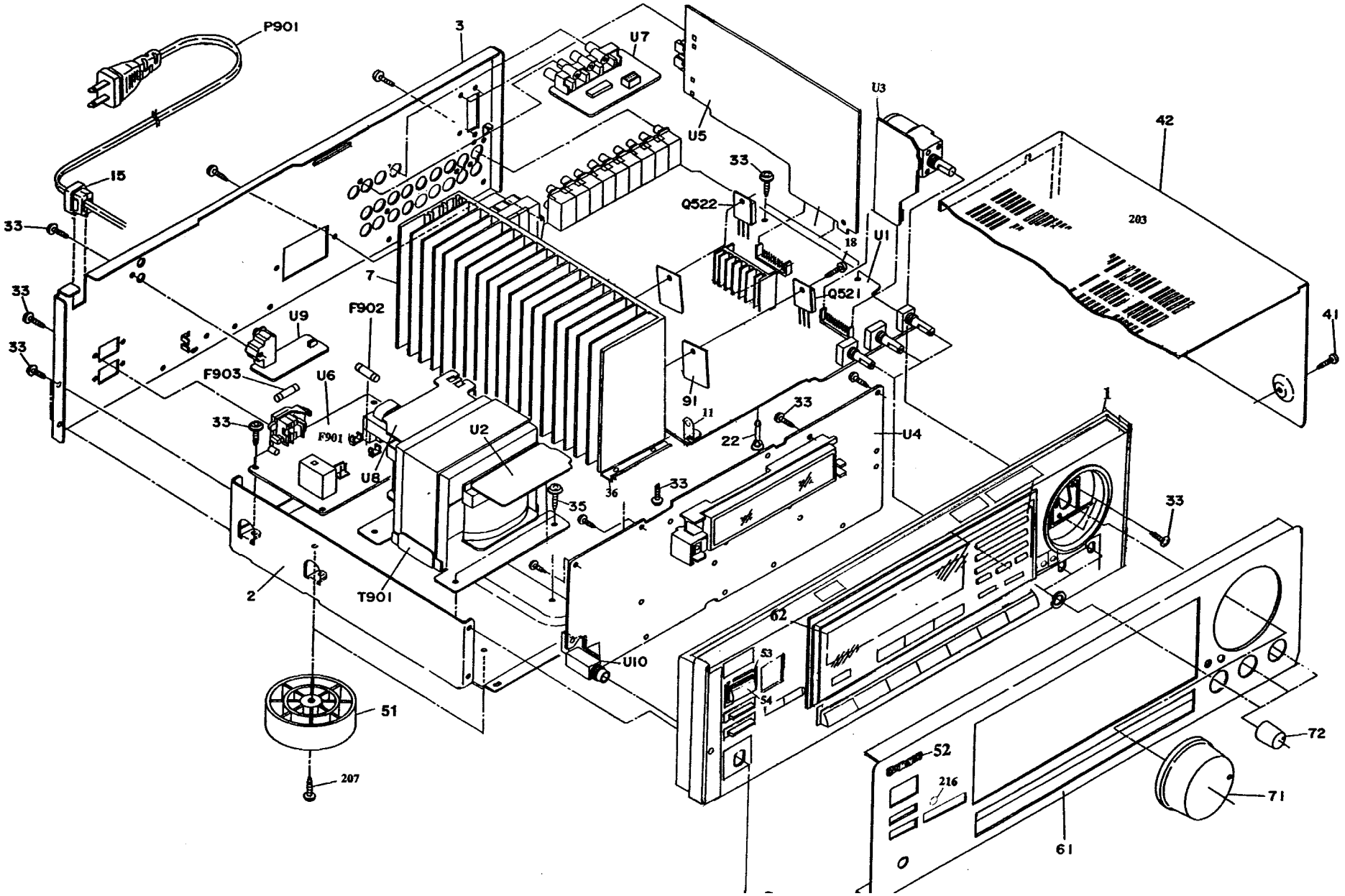

PARTS LIST

REF. NO.	PART NO.	DESCRIPTION
1	27110952Y	Front Bracket
2	27100321AY	Chassis
3	27122285Y	Rear Panel <D>
	27122286Y	Rear Panel <P>
	27122287Y	Rear Panel <PT>
	27122288Y	Rear Panel <WT>
7	27160379Y	Radiator
11	27141530A	Retainer (HS-2)
15	27300750	⚠ Cord Bushing #2271
18	801433Y	3SMS8W.SW+14B(BC), Self tapping screw
22	27190991	Holder, KGPS-16RF
28	27190266-1Y	Holder, KGLS-12RF
33	838130088Y	3TTB+8B, Self-tapping screw
35	830440089Y	4TTC+8C(BC), Self-tapping screw
36	27141671Y	Retainer
41	838430088Y	3TTB+8B(BC), Self-tapping screw
42	28184663Y	Top Cover
51	27175319Y	Leg
52	28135244Y	Badge
53	27267955Y	Guide (POW) <P,PT,WT>
54	28325451Y	Knob (POW) <P,PT,WT>
61	27211863Y	Front Panel <D>
	27211864Y	Front Panel <P,PT>
	27211865AY	Front Panel <WT>
62	28191753Y	Clear Plate
71	28325456Y	Knob (VOL)
72	28325454Y	Knob (TONE)
91	223025	AC262, Isolation Sheet
203	28141240Y	Cushion t3.5x35
206	28141332Y	Cushion, t=1.5
207	831430088Y	3TTW+8B(BC), Self-tapping screw
214	27215274Y	Decor Frame
216	28198778Y	Facet
D911	22380038 or	⚠ RBV602 or
	22380274	⚠ RS603M, diode
F901	252164	⚠ 5A-UL, /T-237, Fuse <D,WT>
F902	252075	⚠ 2.5A-SE-EAK, Fuse <P,PT,WT>
F903	252075	⚠ 2.5A-SE-EAK, Fuse <P,PT>
P711	2047311512	NCFC7-311512, Flexible flat cable

NOTE: THE COMPONENTS IDENTIFIED BY MARK ⚠ ARE CRITICAL FOR RISK OF FIRE AND ELECTRIC SHOCK. REPLACE ONLY WITH PART NUMBER SPECIFIED.

REF. NO.	PART NO.	DESCRIPTION
P901	253192HITY or	⚠ AS-UC-6#18, (SPT-2), Power supply cord <D>
	253194MAR	⚠
	253193HIT or	⚠ AS-CEE, Power supply cord <P,PT>
	253195MAR	⚠
	253233KAW	⚠ AS-CEE-2, Power supply cord <WT>
Q521,Q522	2202823	2SC5200-O, Power transistors
Q523,Q524	2202813	2SA1943-O, Power transistors
T901	2301214	⚠ NPT-1280P, Power transformer <P>
	2301214	⚠ NPT-1280P, Power transformer <PT>
	2301215	⚠ NPT-1280DG, Power transformer <WT>
	2301216	⚠ NPT-1281D, Power transformer <D>
U1	1A725564-3AY	NAAR-5864-3A, Main circuit pc board ass'y <D>
	1A725564 3BY	NAAR-5864-3B, Main circuit pc board ass'y <P,PT,WT>
U2	1A725566-3AY	NAETC 5866-3A, Power supply pc board ass'y <D>
	1A725566-3BY	NAETC-5866 3B, Power supply pc board <P,PT,WT>
U3	1A725565-3AY	NAETC-5865-3A, Volume pc board ass'y <D>
	1A725565-3BY	NAETC-5865-3B, Volume pc board ass'y <P,PT,WT>
U4	1A725518-1AY	NADIS-5918-1A, Display circuit pc board ass'y <D>
	1A725518-1BY	NADIS-5918-1B, Display circuit pc board ass'y <P,PT>
	1A725518-1CY	NADIS-5918-1C, Display circuit pc board ass'y <WT>
U5	1A725519-1AY	NARF-5919-1A, Tuner circuit pc board ass'y <D>
	1A725519-1BY	NARF-5919-1B, Tuner circuit pc board ass'y <P,PT>
	1A725519-1CY	NARF-5919-1C, Tuner circuit pc board ass'y <WT>
U6	1A725520-1AY	NAPS-5920-1A, Power supply circuit pc board ass'y <D>
	1A725520 1BY	NAPS-5920-1B, Power supply circuit pc board ass'y <P,PT>
	1A725520-1CY	NAPS 5920-1C, Power supply circuit pc board ass'y <WT>
U7	1A725521-1AY	NAETC-5921-1A, Video circuit pc board ass'y <D>
	1A725521-1BY	NAETC-5921-1B, Video circuit pc board ass'y <P,PT>
	1A725521-1CY	NAETC-5921-1C, Video circuit pc board ass'y <WT>
U8	1A725524-1AY	NAETC-5924-1A, Primary pc board ass'y <D>
	1A725524-1BY	NAETC-5924-1B, Primary pc board ass'y <P,PT>
	1A725524-1CY	NAETC-5924-1C, Primary pc board ass'y <WT>
U9	1A725522-1AY	NADIS-5922-1A, RI Terminal circuit pc board ass'y <D>
	1A725522-1BY	NADIS-5922-1B, RI Terminal circuit pc board ass'y <P,PT>
	1A725522-1CY	NADIS-5922-1C, RI Terminal circuit pc board ass'y <WT>
U10	1A725523-1AY	NAETC-5923-1A, Headphone pc board ass'y <D>
	1A725523-1BY	NAETC-5923-1B, Headphone pc board ass'y <P,PT>
	1A725523-1CY	NAETC-5923-1C, Headphone pc board ass'y <WT>
U11	1A725567-3AY	NAETC-5867-3A, Speaker Impedance pc board <D>
	1A725567-3BY	NAETC-5867-3B, Speaker Impedance pc board <P,PT>
	1A725567-3CY	NAETC-5867-3C, Speaker Impedance pc board <WT>

NOTE: <D> 120V model only
<P> 230V model only
<WT> Taiwanes model only
<PT> Asian model only

BLOCK DIAGRAM

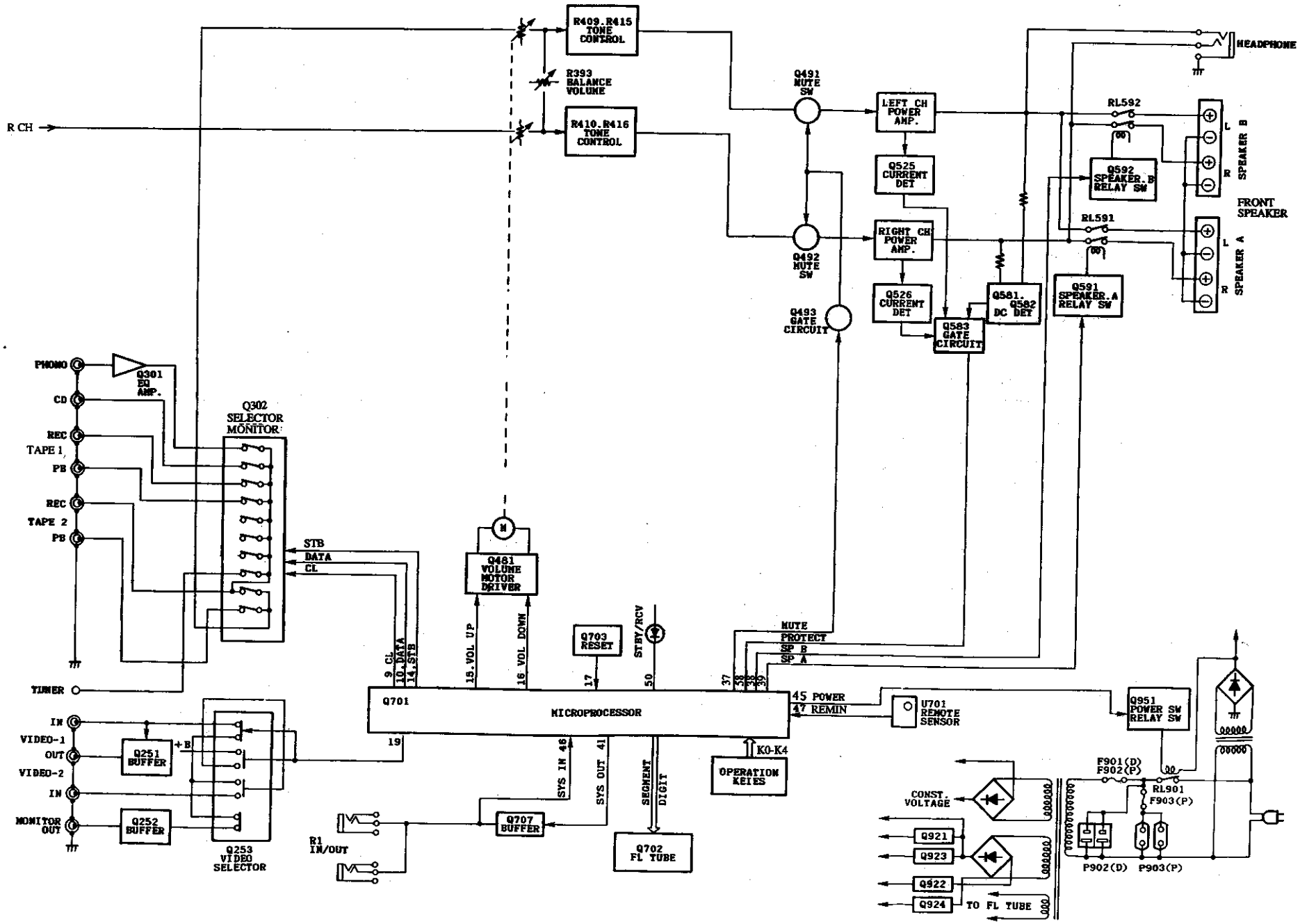

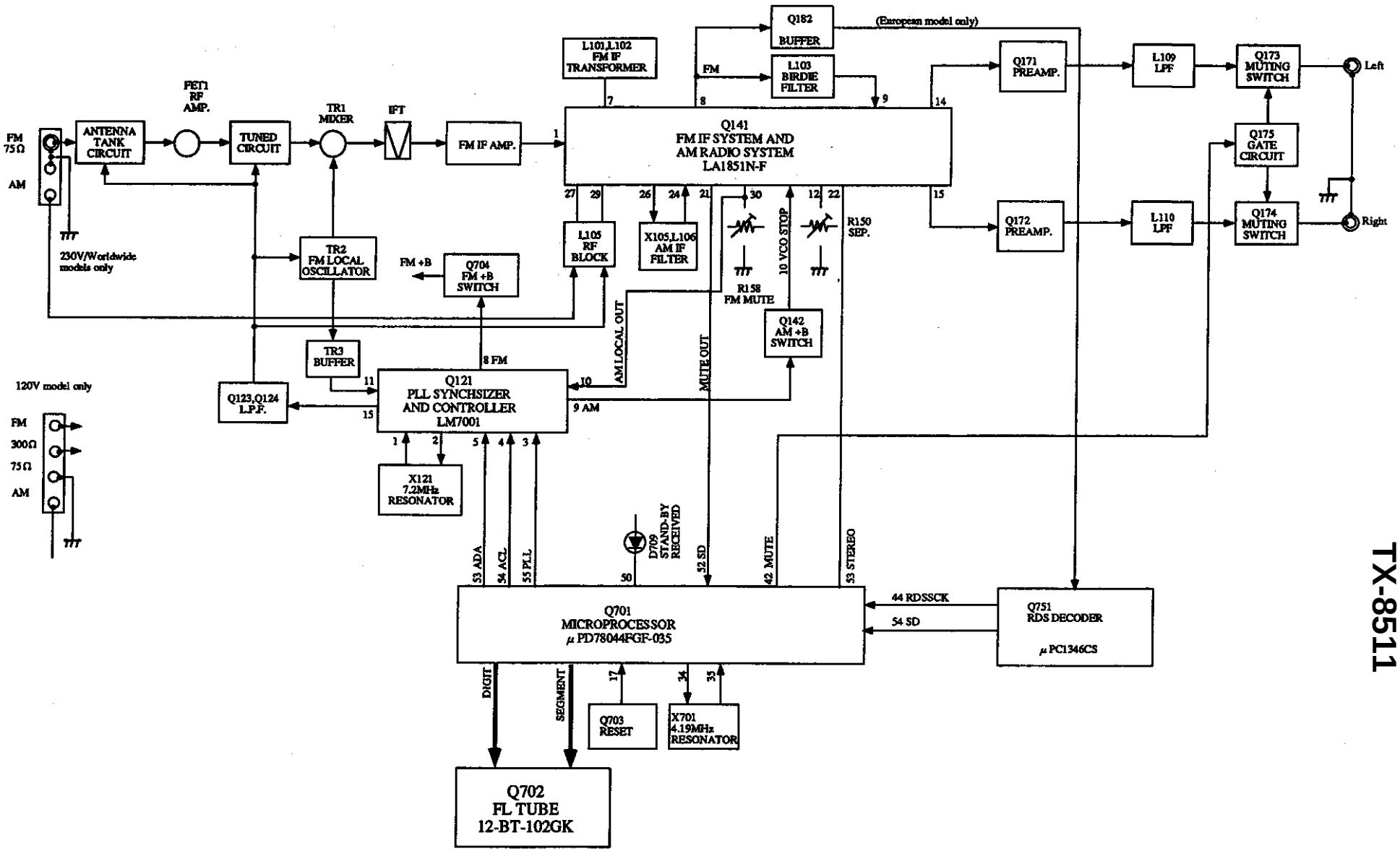
FM 75Ω
AM
ANTENNA TANK CIRCUIT
FET1 RF AMP.
TUNED CIRCUIT
TR1 MIXER
IFT
FM IF AMP.
230V/Worldwide models only
TR2 FM LOCAL OSCILLATOR
FM +B
Q704 FM +B SWITCH
TR3 BUFFER
120V model only
FM 300Ω
75Ω
AM
Q123,Q124 L.P.F.
Q121 PLL SYNCHSIZER AND CONTROLLER LM7001
X121 7.2MHz RESONATOR
L101,L102 FM IF TRANSFORMER
Q182 BUFFER
(European model only)
FM
L103 BIRDIE FILTER
Q141 FM IF SYSTEM AND AM RADIO SYSTEM LA1851N-F
L105 RF BLOCK
X105,L106 AM IF FILTER
10 VCO STOP
R150 SEP.
R158 FM MUTE
Q142 AM +B SWITCH
AM LOCAL OUT
MUTE OUT
8 FM
9 AM
Q171 PREAMP.
Q172 PREAMP.
L109 LPF
L110 LPF
Q173 MUTING SWITCH
Q174 MUTING SWITCH
Q175 GATE CIRCUIT
Left
Right
D709 STAND-BY RECEIVED
53 ADA
54 ACL
55 PLL
52 SD
42 MUTE
53 STEREO
Q701 MICROPROCESSOR μPD78044FGF-035
44 RDSSCK
54 SD
Q751 RDS DECODER μPC1346CS
DIGIT
SEGMENT
Q703 RESET
X701 4.19MHz RESONATOR
Q702 FL TUBE 12-BT-102GK

MICROPROCESSOR CONNECTION DIAGRAM

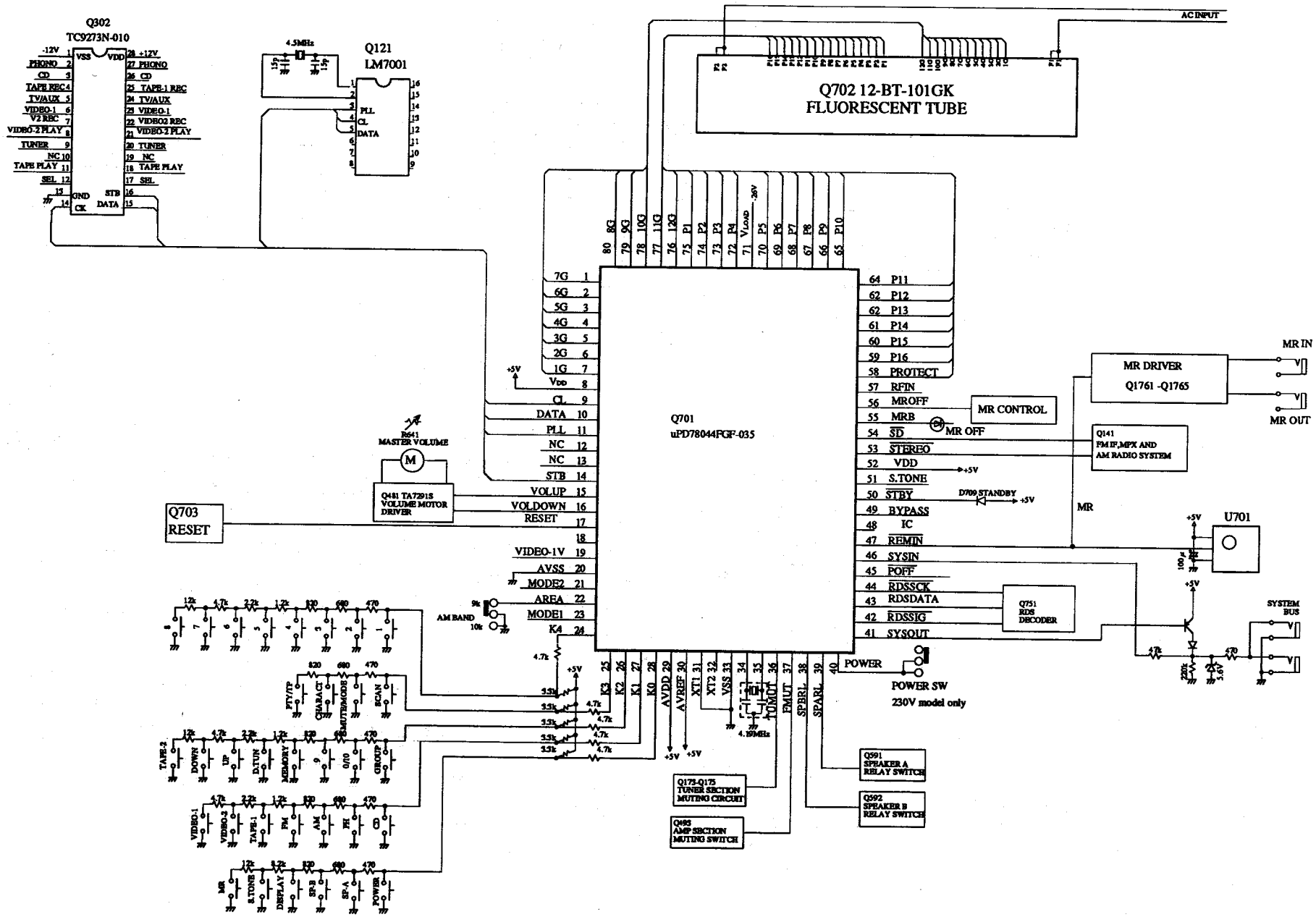

TERMINAL DESCRIPTION

Q701 : μPD78044FGF-035

Pin No.	Function	I/O	Description
1~7	7G~1G	O	Grid control output pin. On at the high level.
8	VDD		Power supply pin (+5V)
9	CL	O	Clock output pin. Connect to the terminals CK of function switch Q302, and PLL IC Q121.
10	DATA	O	Data output pin. Connect to the terminals DATA of function switch Q302, and PLL IC Q121.
11	PLL	O	Chip enable output pin for PLL IC Q121.
12	NC		Not used.
13	NC		Not used.
14	STB	O	Chip enable output pin. Connect to the terminal STB of function switch Q302.
15	VOLUP	O	Volume control output pin.
16	VOLDOWN	O	Volume control output pin. (Refer table 1.)
17	$\overline{\text{RESET}}$	I	System reset input pin
18	NC		Not used.
19	VIDEO-1V	O	Video-1 control pin.
20	AVSS		Ground pin of A/D converter
21	MODE2	I	A or B setting input pin.
22	AREA	I	Initializing input of band region
23	MODE1	I	Initializing input of operation mode
24	K4	I	Operation key connection pin
25	K3	I	Operation key connection pin
26	K2	I	Operation key connection pin
27	K1	I	Operation key connection pin
28	K0	I	Operation key connection pin
29	AVDD		Analogue power supply of A/D converter
30	AVREF		Reference voltage input pin of A/D converter
31	XT1		Crystal connection pin for sub system clock resonator
32	XT2		Not used.
33	VSS		Ground pin
34	X1		Resonator connection terminal for main system clock
35	X2		Connect the ceramic resonator 4.19MHz.
36	TUMUT	O	Muting output pin for tuner section.
37	FRONTMUT	O	Muting output pinfor front amp.
38	SPBRL	O	Relay control pin for speaker B
39	SPARL	O	Relay control pin for speaker A.
40	POWER	O	Power source control output pin
41	$\overline{\text{SYSOUT}}$	O	System code output pin
42	RDSSIG	I	Detecor input pin of RDS broadcast. L:RDS broadcast
43	$\overline{\text{RDSDATA}}$	I	Data input pin from RDS decoder uPD1346CS
44	RDSSCK	I	Clock input pin from RDS decoder IC uPC1346CS
45	$\overline{\text{POFF}}$	I	Power stoppage detector input pin
46	$\overline{\text{SYSIN}}$	I	System code input pin
47	REMIN	I	Remote control signal input pin
48	NC		Not used.
49	NC		Not used.
50	$\overline{\text{STBY/RECV}}$	O	Standby and received indicator output pin
51	S. TONE	O	Selective tone control output pin
52	VDD		Power supply pin (+5V)
53	$\overline{\text{STEREO}}$	I	Detector input pin of FM stereo broadcast
54	SD	I	Detector input pin of broadcast more than muting level
55	MROFF		Multi reem indicator
56	NC		Not used
57	RFIN	I	RF mode injput pin
58	PROTECT		Detector input pin of protection circuit.
59~70	P16 - P5	O	Segment output pins. On at the high level.
71	VLOAD	I	Pull-down resistor connection pin of controller and driver of FL.
72~75	P4 - P1	O	Segment output pins. On at the high level.
76~80	12G~8G	O	Grid control output pins. On at the high level.

Operation	#15	#16
VOLUME UP	H	L
VOLUME DOWN	L	H
STOP	H	H

Table 1

PACKING VIEW

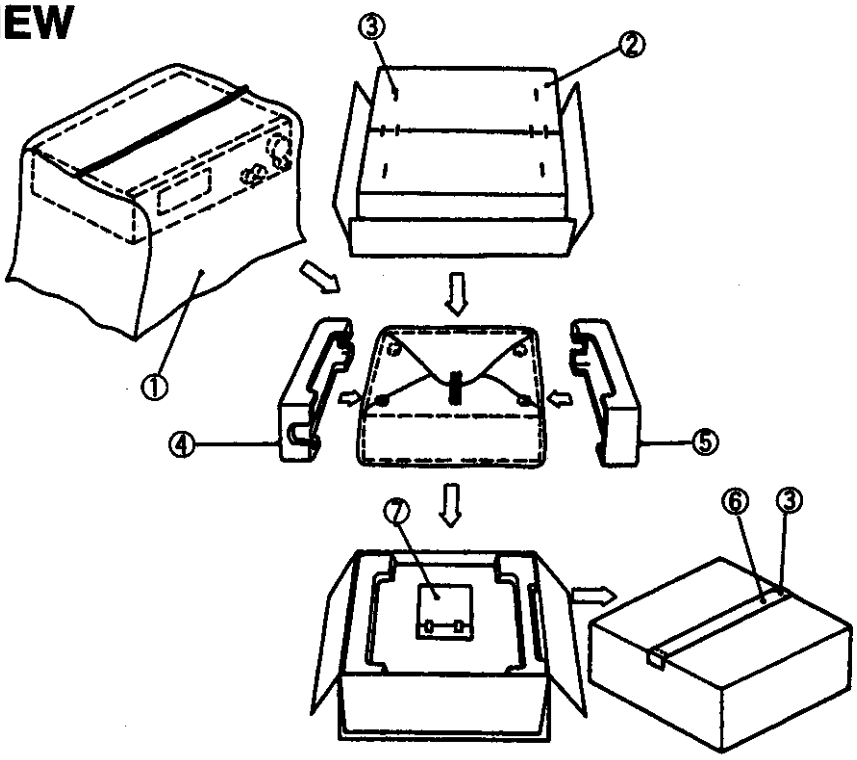

REF. NO.	PART NO.	DESCRIPTION
1	29100034-1AY	Styren Bag 850x650
2	29053096Y	Carton Box <D>
	29053098Y	Carton Box <P>
	29053111Y	Carton Box <PT>
	29053097Y	Carton Box <WT>
3	282321Y	Staple
4,5	29091763Y	Pad AS
7	Accessory	
	29342365Y	Instruction manual, E
	29342366Y	Instruction manual, U3FSI <P>
	29342369Y	Instruction manual, T <PT,WT>
	29342367Y	Instruction manual, U3GSWD <P>
	29355133AY	Instruction Sheet (DBP) <P>
	29365019BY	Warranty Card <D>
	29358002KY	Service Station list <D>
	29362090Y	Label (EAN) AS <P,PT,WT>
	29361786Y	Label (Masaysia) <PT,WT>
	29362005-1Y	Label (UPC)AS <D>
	29100097-1AY	Styren Bag, 350x250
	29361759Y	Label (UL/CUL) <D>
	232140Y	NMA-3057, AM Loop antenna
	292111Y	FM antenna <D>
	292112Y	FM antenna <P,PT,WT>
	25065462	YAE21-0237, FM adaptor <PT,WT>
	25055018	CV-K-1, Conversion plug <WT>
	24140329Y	RC-329S, Remote control transmitter
	3010194	UM-3, Two Batteies

NOTE: <D> 120V model only
<P> 230V model only
<WT> Taiwanes model only
<PT> Asian model only

ADJUSTMENT PROCEDURES

Preparation

1. Input

FM mono: 1 kHz, 75 kHz devi., 60 dB/μV

FM stereo: 1 kHz, 7 5 kHz devi., 60 dB/μV

Pilot signal :19 kHz,7.5 kHz devi.

AM : 400Hz ,30% mod.

2. Outputs

Connect the non-inductive type resistors of 8 ohms to the speaker terminals A unless otherwise noted.

3. Standard Knob Positions

Master Volume Control	Maximum
Bass Control	Center
Treble Control	Center
Balance Control	Center
Input Selector	CD
Tape 2 Monitor	CD
Muting	Off
Selective tone	Off
Speaker	A on, B off
Speaker Impedance	A or B 8 ohm min./Speaker

IDLING CURRENT ADJUSTMENT

1. Connect the DC voltmeter to the terminals P521and P522(VCT and IID) on the main circuit pc board.
2. Adjust the trim resistors R533and R534 so that the indicator of voltmeter becomes 2.0mV.
3. After 4 - 6 minutes of heat runing, readjust R533 and R534 to get 4.8 - 5.2mV.

NOTE: Set Volume knob to the minimum position.

Set speaker impedance selector switch to "A or B 8 ohms min./SPEAKER" position.

Set the unit to the test mode.

1. Press and hold down the CD button, then press the Power button.
2. " TEST-" is displayed on the display.
3. While "TEST-" is displayed, press the FM key.

FM ADJUSTMENT

Item	Step	Connection of instrument	FM SG output	Stereo modulator output	Tuning frequency	Output indicator	Adjustment point	Adjust for	Remarks
FM IF/RF	1	Fig.1	99.0MHz 1kHz 75kHz devi. 65dBf(60dB)	——	99.0MHz	DC voltmeter	L101	0±20mV	FM MUTE/MODE switch:ON/STEREO Repeat the steps 1 and 3 until no further adjustment is necessary.
	2					AC voltmeter	IFT on the front end	Maximum	
	3					Distortion analyzer	L102	Minimum	
Stereo Distortion		Fig.2	99.0MHz Ext. mod.65dBf(60dB)	Channel L or R 1kHz	99.0MHz	Distortion analyzer	IFT on the front end	Minimum	Don't turn more than ±180°
Stereo Separation	1	Fig.2	99.0MHz Ext. mod. 65dBf(60dB)	Channel L 1kHz	99.0MHz	Channel R AC voltmeter	R150	Minimum	Maximum and same separation
	2			Channel R 1kHz		Channel L AC voltmeter		Minimum	
Muting Level		Fig.2	99.0MHz 21.2dBf(16dB) <P/W Models> 23.2dbF(18dB) <D model>	——	99..0MHz	Oscilloscope or TUNED indicator	R158	Signal output or light on	
RDS		Fig.3	99.0MHz Ext. mod.40dB	RDS data or 57kHz 3% devi.	99.0MHz	Oscilloscope	R786	Maximum	European model only

AM ADJUSTMENT

120V model

Step	AM SG output	Tuning Frequency	Output Indicator	Adjustment point	Adjust for
1		530kHz	Digital DC voltmeter	OSC coil on RF block L105	1.3±0.1V
2	600kHz 400Hz 30% mod. 60dB/m	600kHz	AC voltmeter	RF coil on RF block L105	Maximum
3	990kHz 400Hz 30% mod. 60dB/m	990kHz	AC voltmeter	L106	Maximum

Reference Specification
FM tuned voltage: 87.9MHz~107.9MHz
More than 1.3V~Less than 10V
AM tuned voltage: 530kHz~1710kHz
1.3±0.2V~Less than 9.0V

230V and worldwide models

Step	AM SG output	Tuning Frequency	Output Indicator	Adjustment point	Adjust for
1		522kHz or 531kHz	Digital DC voltmeter	OSC coil on RF block L151	1.3±0.1V
2	603kHz 400Hz 30% mod. 60dB/m	603kHz	AC voltmeter	RF coil on RF block L105	Maximum
3	999kHz 400Hz 30% mod. 60dB/m	999kHz	AC voltmeter	L106	Maximum

Reference Specification
FM tuned voltage: 87.5MHz~108.0MHz
more than 1.3V ~Less than 10V
AM tuned voltage: 522kHz~1611kHz
1.3±0.2V~Less than 9.0V
(230V model)
AM tuned voltage: 531kHz~1602kHz
1.3±0.2V~Less than 9.0V
(Worldwide model)

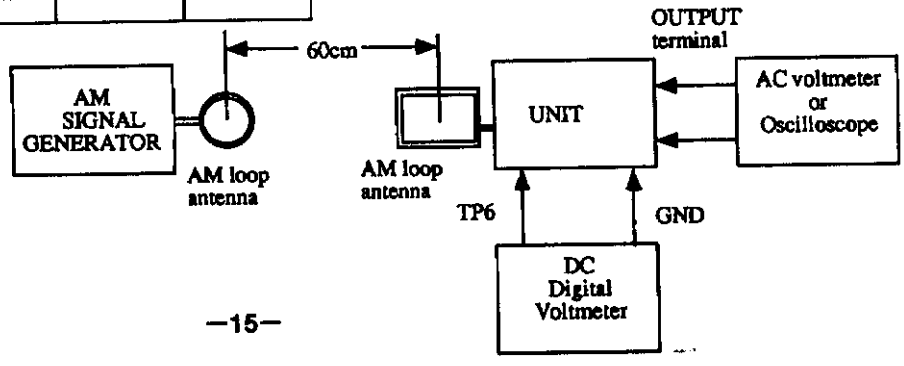

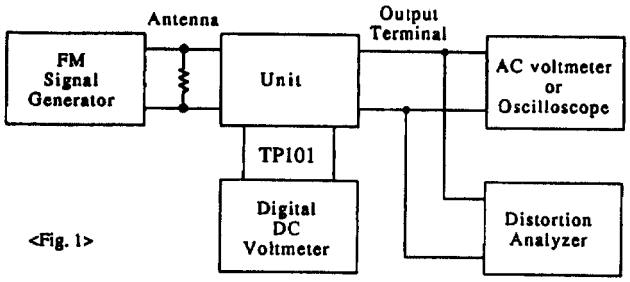

<Fig. 1>

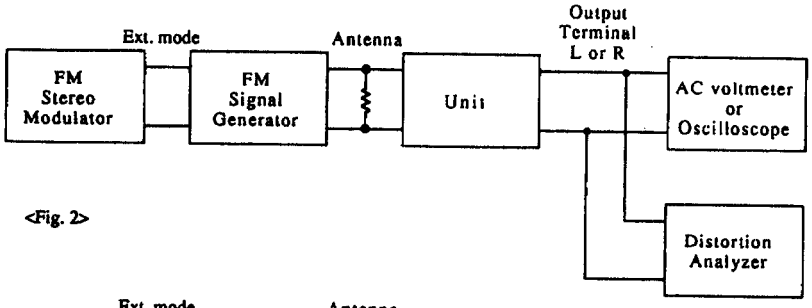

<Fig. 2>

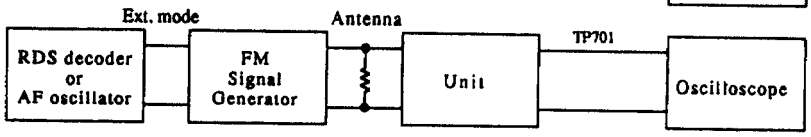

<Fig. 3>

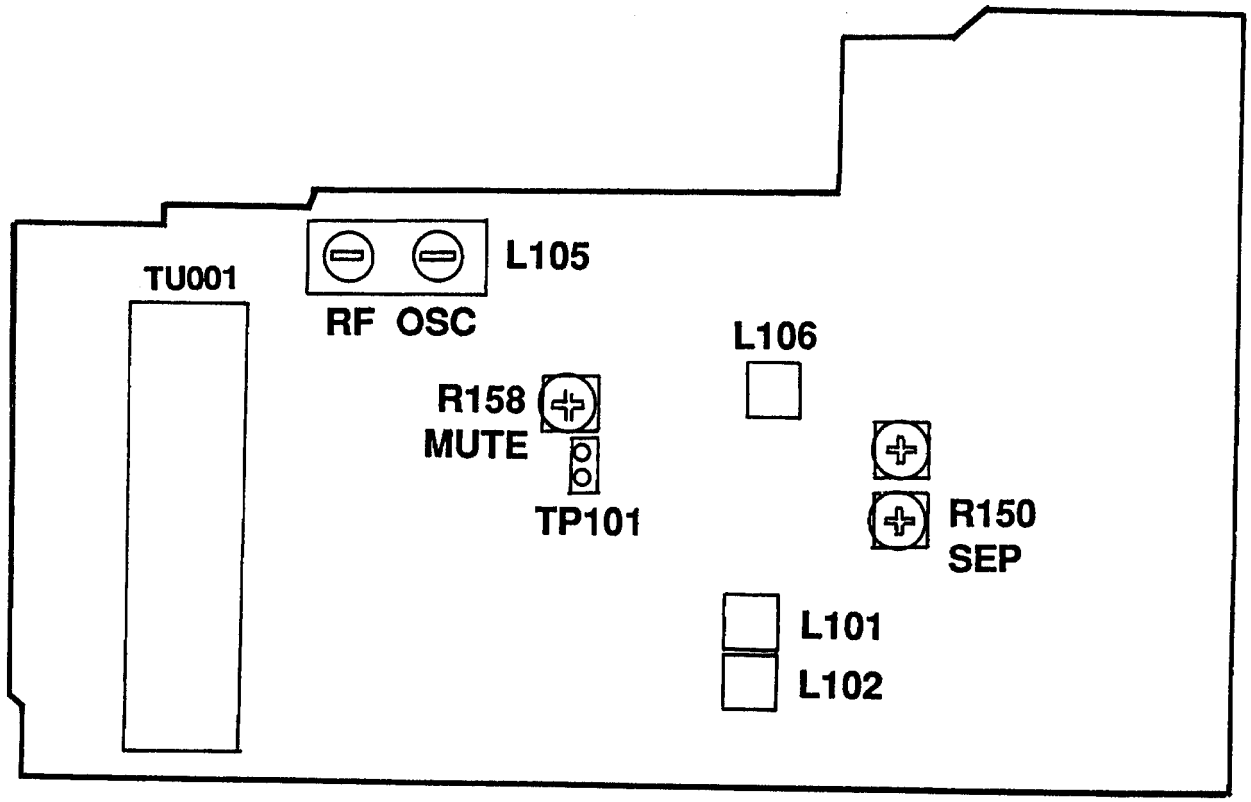

PRINTED CIRCUIT BOARD-PARTS LIST

U1 MAIN CIRCUIT PC BOARD (NAAR-5864)

CIRCUIT NO.	PART NO.	DESCRIPTION
	ICs	
Q301	222502	NJM4558D-X
Q302	22240881	TC9273N-010
Q401,Q402	22240250	NJM2068L-D
Q481	22240239	TA7291S
Q921	222780125NEC	MPC78M12AHF
Q922	222790125	79M12HF
Q923	222780565JRC	NJM78M56FA
	Transistors	
Q403-Q406	2211945	2SK246-GR
Q407	2213510 or	DTA114ES or
	2214350	RN2202
Q491,Q492	2213631	RN1241-A
Q493	2213510 or	DTA114ES or
	2214350	RN2202
Q501-Q504	2211733 or	2SC1845-E or
	2211732	2SC1845-F
Q505,Q506	2211353	2SA949-O
Q507,Q508	2211733 or	2SC1845-E or
	2211732	2SC1845-F
Q509,Q510	2213284	2SC1740S-R
Q511,Q512	2211353	2SA949-O
Q513,Q514	2211633	2SC2229-O
Q515,Q516	2213284	2SC1740S-R
Q517,Q518	2203010	2SC5171
Q519,Q520	2203000	2SA1930
Q525,Q526	2214984 or	2SC2631-R or
	2214985	2SC2631-S
Q527,Q528	2211353	2SA949-O
Q529,Q530	2211633	2SC2229-O
Q581,Q582	2211733 or	2SC1845-E or
	2211732	2SC1845-F
Q583	2211792	2SA992-F
Q591-Q593	2213640	DTC123JS
Q924	2211455	2SA1015-GR
	Diodes	
D401-D404	223163 or	1SS133 or
	223205	1SS270A
D501,D502	22380260 or	RL1N4003 or
	22380032	1SR139-100, GP104003E
D591,D592	223163 or	1SS133 or
	223205	1SS270A
D915-D921	22380260 or	RL1N4003 or
	22380032	1SR139-100, GP104003E
D922	224472704	MTZJ27D, Zener
D923-D926	223163 or	1SS133 or
	223205	1SS270A
	Capacitors	
C303,C304	354741009	10 μF,16V,Elect.
C307,C308	354721019	100 μF,6.3V, Elect.
C309,C310	374726224	6200pF±5%,50V, Plastic
C311,C312	374721824	1800pF±5%,50V, Plastic
C313-C316	354741009	10 μF,16V,Elect.
C391,C392	374721015	100pF±10%,50V, Plastic
C401,C402	354741009	10 μF,16V,Elect.
C407,C408	354741009	10 μF,16V,Elect.
C411,C412	354741009	10 μF,16V,Elect.
C413,C416	374721044	0.1 μF±5%,50V, Plastic
C417-C422	374721024	1000pF±5%,50V, Plastic
C433,C434	374721534	0.15 μF±5%,50V, Plastic
C435,C436	374721015	100pF±10%,50V, Plastic
C437	374721044	0.1 μF±5%,50V, Plastic
C441	354721019	100 μF,6.3V,Elect.
C442	354780479	4.7 μF,50V,Elect.
C501,C502	354781009	10 μF,50V,Elect.
C503,C504	374721015	100pF±10%,50V, Plastic
C507,C508	354724719	470 μF,6.3V, Elect.
C513,C514	354722219	220 μF,6.3V, Elect.
C515,C516	354794719	470 μF,100V, Elect.
C521,C522	354784709	47 μF,50V, Elect.
C529,C530	374721044	0.1 μF±5%,50V, Plastic
C581	354721019	100 μF,6.3V, Elect.
C915,C916	3504280	8200 μF,56V, Elect. <D,PT,WT>
C915,C916	3504281	10000 μF,71V, Elect. <D>
C918	354761029	1000 μF,35V, Elect.
C919	354763319	330 μF, 35V,Elect.
C922-C925	354781009	10 μF,50V, Elect.
C926	354761019	100 μF,35V, Elect.
C928	354781019	10 μF,50V, Elect.
C932	354781009	10 μF,50V, Elect.
C935	354754719	470 μF,25V, Elect.
C983	374721034	0.01 μF±5%,50V, Plastic
	Resistors	
R393	5104288	N11RCL, 250KWT20Z, BALANCE
R409	5104356	N14RLC, 100KWT20Z, BASS
R415	5104356	N14RLC, 100KWT20Z, TREBLE
R511,R512	443526804	68ohm±5%,1/2W,Metal oxid
R529-R532	443528204	82ohm±5%,1/2W,Metal oxid
R533,R534	5210259	N06HR, 2KBC, BIAS
R539,R540	443528204	82ohm±5%,1/2W,Metal oxid
R541,R542	443526804	68ohm±5%,1/2W,Metal oxid
R545,R546	4000132	0.22ohm±5%,5W,Metal Plate
R551,R552	453630824	8.2ohm±5%,1W,Metal
R563,R564	453530224	2.2ohm±5%,1/2W,Metal
R565,R566	443623914	390ohm±5%,1W,Metal oxid
R581,R582	443523314	330ohm±5%,1/2W,Metal oxid
R583-R586	453530224	2.2ohm±5%,1/2W,Metal
R925	443523314	330ohm±5%,1/2W,Metal oxid
R926	443522204	22ohm±5%,1/2W, Metal oxid
R933	443524704	47ohm±5%,1/2W,Metal oxid
	Coils	
L501,L502	231176	S-1.3C
	Plugs	
P211a	25055709	NPLG-13P665
P521,P522	25055038	NPLG-2P29
P613a	25055706	NPLG-10P664
	Jacks	
P301-P303	25045458 or	NPJ-6PDBL279 or
	25045300	NPJ-6PDBL159
	Terminals	
P501	25060224 or	NTM-8PDML146 or
	25060158	NTM-8PDML084
	Sockets	
P711a	25051838 or	NSCT-31P1625 or
	25051297	NSCT-31P1086, NSCT-31P758
	Relays	
RL591,R592	25065517 or	U11 NRL-2P5A-DC24-098 or
	25065485	NRL-2P2A-DC24-086
	Radiator	
Q921a	27160209	RAD-67
Q921b	838430107	3TTB+10S(BC), Self-tapping screw

U2 POWER SUPPLY PC BOARD (NAETC-5866)

CIRCUIT NO.	PART NO.	DESCRIPTION
	Resistors	
R921,R922	453530104	⚠ 1ohm±5%,1/2W,Metal

U3 VOLUME PC BOARD (NAETC-5865)

CIRCUIT NO.	PART NO.	DESCRIPTION
	Resistor	
R641	5104334	N16RGL100KBT, 25F, VOLUME
	Socket	
P613b	25051235	NSCT10P1025

U4 DISPLAY CIRCUIT PC BOARD (NADIS-5918)

CIRCUIT NO.	PART NO.	DESCRIPTION
	ICs	
Q701	22241057	MPD78044FGF-035
Q751	22240679	MPC1346CS <P,PT>
	Transistors	
Q703	221282	DTC144ES
Q705,Q706	2213284	2SC1740S-R
Q707	2213510	DTA114ES
Q791	2211255	2SC1815-GR
Q792	2213640	DTC123JS
	Diodes	
D701,D702	223163 or	1SS133 or
	223205	1SS270A
D703	224470913	MTZJ9.1C, Zener
D704,D705	223163 or	1SS133 or
	223205	1SS270A
D706,D707	224470562	MTZJ5.6B, Zener
D708	223163 or	1SS133 or
	223205	1SS270A
D709	225290T	SEL4110R, LED
D710-D712	223163 or	1SS133 or
	223205	1SS270A
D751	223163 or	1SS133 or <P,PT>
	223205	1SS270A
D791	223163 or	1SS133 or
	223205	1SS270A
D792	225291DT	SEL4910D-D, LED
	Capacitors	
C701	3000076 or	0.01F,5.5V Super
	3000078T	
C702	375524744	0.47 μF±5%,50V, Plastic
C703	353721019	100 μF,6.3V, Elect.
C704	353780109	1 μF,50V, Elect.
C706,C707	353780109	1 μF,50V, Elect.
C709	354721019	100 μF,6.3V, Elect.
C711	353721019	100 μF,6.3V, Elect.
C751	354721019	100 μF,6.3V, Elect. <P,PT>
C754	374724724	4700pF±5%, 50V, Plastic <P,PT>
C755,C756	374723324	3300pF±5%, 50V, Plastic <P,PT>
C757	354780229	2.2 μF,50V, Elect. <P,PT>
C758	374724734	0.047 μF±5%, 50V, Plastic <P,PT>
C759	374722234	0.022 μF±5%, 50V, Plastic <P,PT>
C760	374724724	4700pF±5%, 50V, Plastic <P,PT>
	Resistor	
R786	5210265	N06HR, 50KBC, BPF FC <P,PT>
	Coils	
L701-L703	233454K220	NCH-1452, 220K
	Sockets	
P211b	25051238	NSCT-13P1028
P711b	25051875 or	NSCT-31P1662 or
	25051335	NSCT-31P1124, NSCT-31P727
	Plug	
TP701	25055038	NPLG-2P29 <P,PT>
	FL Tube	
Q702	212157	12-BT-102GK
	Holder	
Q702a	27190989	HOLDER(FL)
	Switches	
S701	25035652	NPS-111-S604 <D>
S702-S713	25035652	NPS-111-S604
S715-S725	25035652	NPS-111-S604
S726	25035548	NPS-111-S510 <P,PT>
S731-S738	25035652	NPS-111-S604
S739	25035653	NPS-122-L605 <P,PT,WT>
	Remote sensor	
U701	24130011	PIC-12043TE2
	Ceramic lock	
X701	3010163	CST-4.19MGW
	Resonator	
X751	3010203	AF6146CG <P,PT>

U5 TUNER CIRCUIT PC BOARD (NARF-5919)

CIRCUIT NO.	PART NO.	DESCRIPTION
	ICs	
Q121	22240090	LM7001
Q141	22240983	LA1851N-F
	Transistors	
Q101	2210746	2SC945A-P <P,PT,WT>
Q102	2211723	2SC1923-O
Q105	2213284	2SC1740S-R
Q122	2213510	DTA114ES
Q123	2212445	2SK365-GR
Q124	2213284	2SC1740S-R
Q142	2213510	DTA114ES
Q143	221282	DTC144ES
Q144	2213640	DTC123JS
Q171,Q172	2213284	2SC1740S-R
Q173,Q174	2212794	2SD1468-R
Q175	2213510	DTA114ES
Q182	2213284	2SC1740S-R <P,PT>
	Diodes	
D101,D102	223191	SD101
D165	224470512	MTZJ5.1B, Zener
	Front end	
TU001	240104	ENV172D2G1 <D>
	240103	ENV172A2G1 <P,PT,WT>
	Capacitors	
C001	354741019	100 μF,16V, Elect.
C106	354742209	22 μF,16V, Elect.
C107	354784799	0.47 μF,50V, Elect.
C127	354721019	100 μF,6.3V, Elect.
C130	354780229	2.2 μF,50V, Elect.
C131	374722234	0.022 μF±5%, 50V, Plastic
C132	354783399	0.33 μF,50V, Elect.
C133,C142	354741019	100 μF,16V, Elect.
C145	354741009	10 μF,16V, Elect.
C146	374723324	3300pF±5%, 50V, Plastic
C147	374721534	0.015 μF±5%, 50V, Plastic <D>
C147	374721034	0.01 μF±5%, 50V, Plastic <P,PT,WT>
C149	354780479	4.7 μF,50V, Elect.
C151,C152	354780109	1 μF,50V, Elect.
C153	354783399	0.33 μF,50V, Elect.
C154	354741009	10 μF,16V, Elect.
C155,C156	374721034	0.01 μF±5%, 50V, Plastic <D>
C155,C156	374724724	4700pF±5%, 50V, Plastic <P,PT>
C155,C156	374725624	5600pF±5%, 50V, Plastic <WT>
C159	354780229	2.2 μF,50V, Elect.
C160	354784799	0.47 μF,50V, Elect.
C162,C166	353741009	10 μF,16V, Elect.
C171,C172	354741009	10 μF,16V, Elect.
C173,C174	374721024	1000pF±5%, 50V, Plastic <D>
C175,C176	374722724	2700pF±5%, 50V, Plastic <P,PT,WT>
C177	354780229	2.2 μF,50V, Elect.
C178	354741009	10 μF,16V, Elect.
	Resistors	
R150	5210261	N06HR, 5KBC, Septation
R158	5210264	N06HR, 30KBC, Mute
	Coils	
L101	233457	NFIF-4081
L102	233458	NFIF-4082
L103	233471	NMC-6084 <P,PT,WT>
L104	233454K220	NCH-1452, 220K
L105	232174	NMRF-5077
L106	232139	NMIF-4062
L107,L108	233484	NMC-4085 <P,PT,WT>
L109,L110	231092	NCH-2140 <D>

PRINTED CIRCUIT BOARD-PARTS LIST

CIRCUIT NO.	PART NO.	DESCRIPTION
	Terminals	
P101	25060239 or	NTM-4PDML161 or
	25060195	NTM-4PDML117 <D>
	25060222 or	NTM-2PDML144 or
	25060117	NTM-2PDML051<P,PT>
	25060222 or	NTM-2PDML144 or
	25060117	NTM-2PDML051 <WT>
	Plug	
TP101	25055038	NPLG-2P29
	Shiled plate	
TU001a	27150397	<P,PT,WT>
	Ceramic filters	
X101	3010071	SFE10.7MA5, (RED)
X102	3010130	SFE10.7MZ2A <P,PT,WT>
X103	3010071	SFE10.7MA5, (RED)
X105	3010123	SFZ-45OJL
	Resonator	
X104	3010268	CSB456F23
X121	3010141	XTL-7.2M

U6 POWER SUPPLY CIRCUIT PC BOARD (NAPS-5920)

CIRCUIT NO.	PART NO.	DESCRIPTION
	Transistor	
Q951	2213284	2SC1740S-R
	Diodes	
D951-D954	22380260 or	⚠ RL1N4003 or
	22380032	1SR139-100, GP104003E
D955	223163 or	1SS133 or
	223205	1SS270A
	Capacitors	
C901	3500191	⚠ 0.01 μ F,400VAC, IS C
C952	354742219	220 μ F,16V, Elect.
	Resistors	
R901	431533355	⚠ 3.3M ohm ± 10%,1/2W, Solid <D>
R951	453530824	8.2 ohm ± 5%,1/2W, Metal
	Transformer	
T902	2300670A	⚠ NPT-1111D, Power <D>
	2300671A	⚠ NPT-1111P, Power <P,PT>
	2300672A	⚠ NPT-1111DG, Power <WT>
	Fuse Holders	
F901a	25050065	YSH403T <D>
F902a,F903a	25050065	YSH403T <P,PT,WT>
	Plug	
P901a	25055675	⚠ NPLG-2P631
	AC Outlets	
P902	25051126	⚠ NSCT-4P913 <D>
P903	25051125	⚠ NSCT-4P912 <P,PT,WT>
	Relays	
RL901	25065515 or	⚠ NRL-1P5A-DC12-096 or
	25065508	⚠ NRL-1P10A-DC12-093
	Switch	
S901	25065437	⚠ NSS-22157P, Voltage Selector <WT>

U7 VIDEO CIRCUIT PC BOARD (NAETC-5921)

CIRCUIT NO.	PART NO.	DESCRIPTION
	IC	
Q253	222840661	4066B
	Transistors	
Q251,Q252	2213284	2SC1740S-R
	Diode	
D251	223163 or	1SS133 or
	223205	1SS270A
	Capacitors	
C251,C252	354721019	100 μ F,6.3V, Elect.
C255,C256	354724719	470 μ F,6.3V, Elect.
C257	354721019	100 μ F,6.3V, Elect.
C259	354741019	100 μ F, 16V, Elect.

CIRCUIT NO.	PART NO.	DESCRIPTION
	Jack	
P251	25045462 or	NPJ-4PDYE283 or
	25045339	NPJ-4PDYE190

U9 RI TERMINAL CIRUCUIT PC BOARD (NADIS-5922)

CIRCUIT NO.	PART NO.	DESCRIPTION
	Transistors	
Q1761-Q1763	221282 or	DTC144ES or
	2213560	RN1204
Q1764	2213510 or	DTA114ES or
	2214350	RN2202 <D>
	Diodes	
D1761,D1763	223163 or	1SS133 or
	223205	1SS270A
D1762	223163 or	1SS133 or
	223205	1SS270A <D>
D1764	223163 or	1SS133 or
	223205	1SS270A <P,PT,WT>
	Capacitors	
C1761	354721019	100 μ F,6.3V, Elect.
C1762	374724724	4700pF ± 5%, 50V, Plastic
	Jacks	
P1761	25045481	NPJ-2PDBL299, RI
P1762	25045433	HSJ-1003-01-013, MR <D>
	25045293	HSJ-1003-01-012, MR <P,PT,WT>
	Photo Coupler	
Q1765	24120043	ON3131, PHT CPL <D>
	Switch	
S1761	25065286	NSS-22112, AM Band <WT>

U10 HEADPHONE PC BOARD (NAETC-5923)

CIRCUIT NO.	PART NO.	DESCRIPTION
	Jack	
P503	25045255	YKB21-5009, Headphone

U11 SPEAKER IMPEDANCE (NAETC-5867)

CIRUCUIT NO.	PART NO.	DESCRIPTION
	Switch	
S911	25065437	NSS-22157P, Speaker Impedance <D>

NOTE: THE COMPONENTS IDENTIFIED BY MARK ⚠ ARE CRITICAL FOR RISK OF FIRE AND ELECTRIC SHOCK. REPLACE ONLY WITH PART NUMBER SPECIFIED.

NOTE: <D> 120V model only
<P> 230V model only
<WT> Taiwanes model only
<PT> Asian model only

SCHEMATIC DIAGRAM PART-1

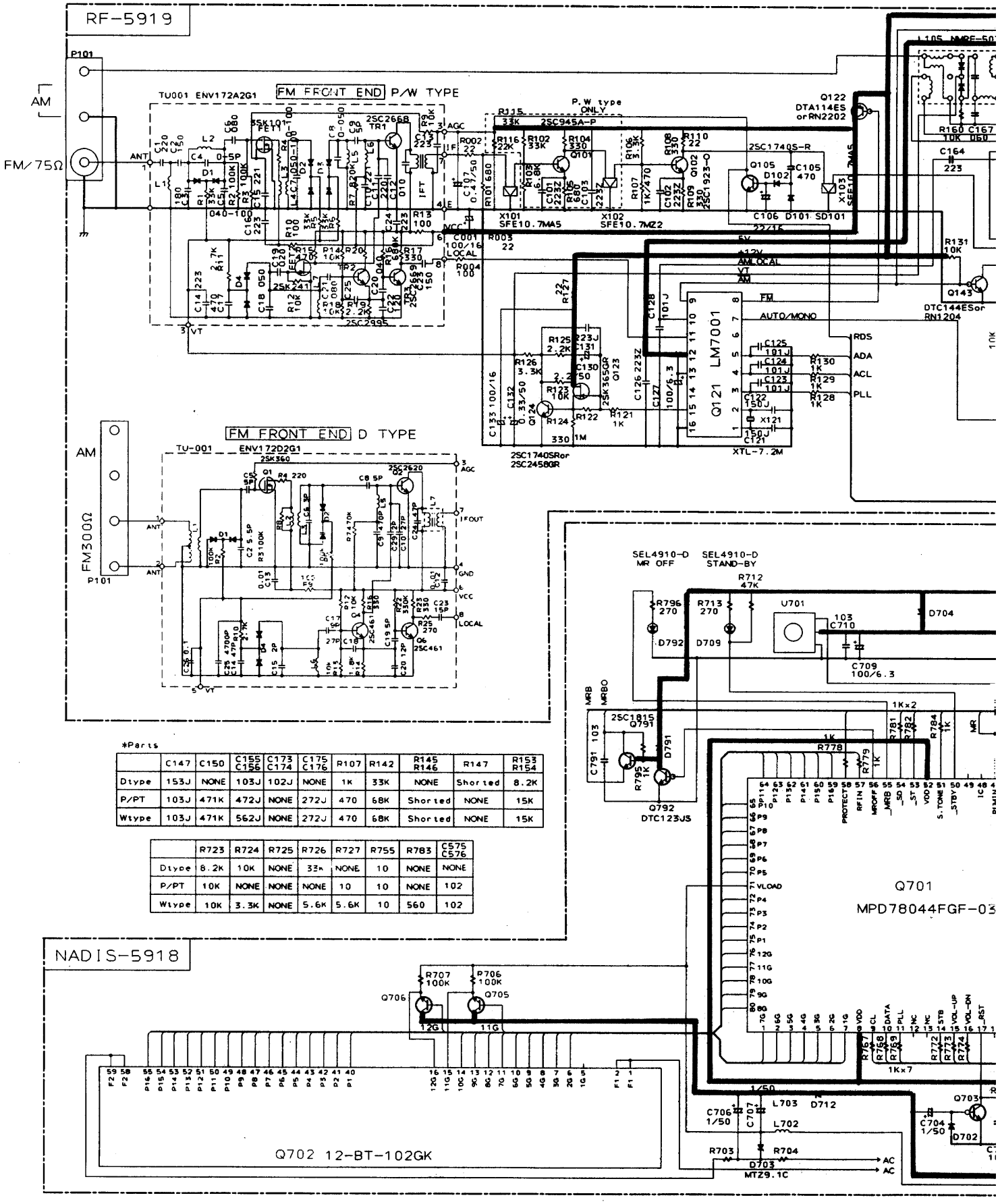

*Parts

	C147	C150	C155 C156	C173 C174	C175 C176	R107	R142	R145 R146	R147	R153 R154
Dtype	153J	NONE	103J	102J	NONE	1K	33K	NONE	Shorted	8.2K
P/PT	103J	471K	472J	NONE	272J	470	68K	Shorted	NONE	15K
Wtype	103J	471K	562J	NONE	272J	470	68K	Shorted	NONE	15K

	R723	R724	R725	R726	R727	R755	R783	C575 C576
Dtype	8.2K	10K	NONE	33K	NONE	10	NONE	NONE
P/PT	10K	NONE	NONE	NONE	10	10	NONE	102
Wtype	10K	3.3K	NONE	5.6K	5.6K	10	560	102

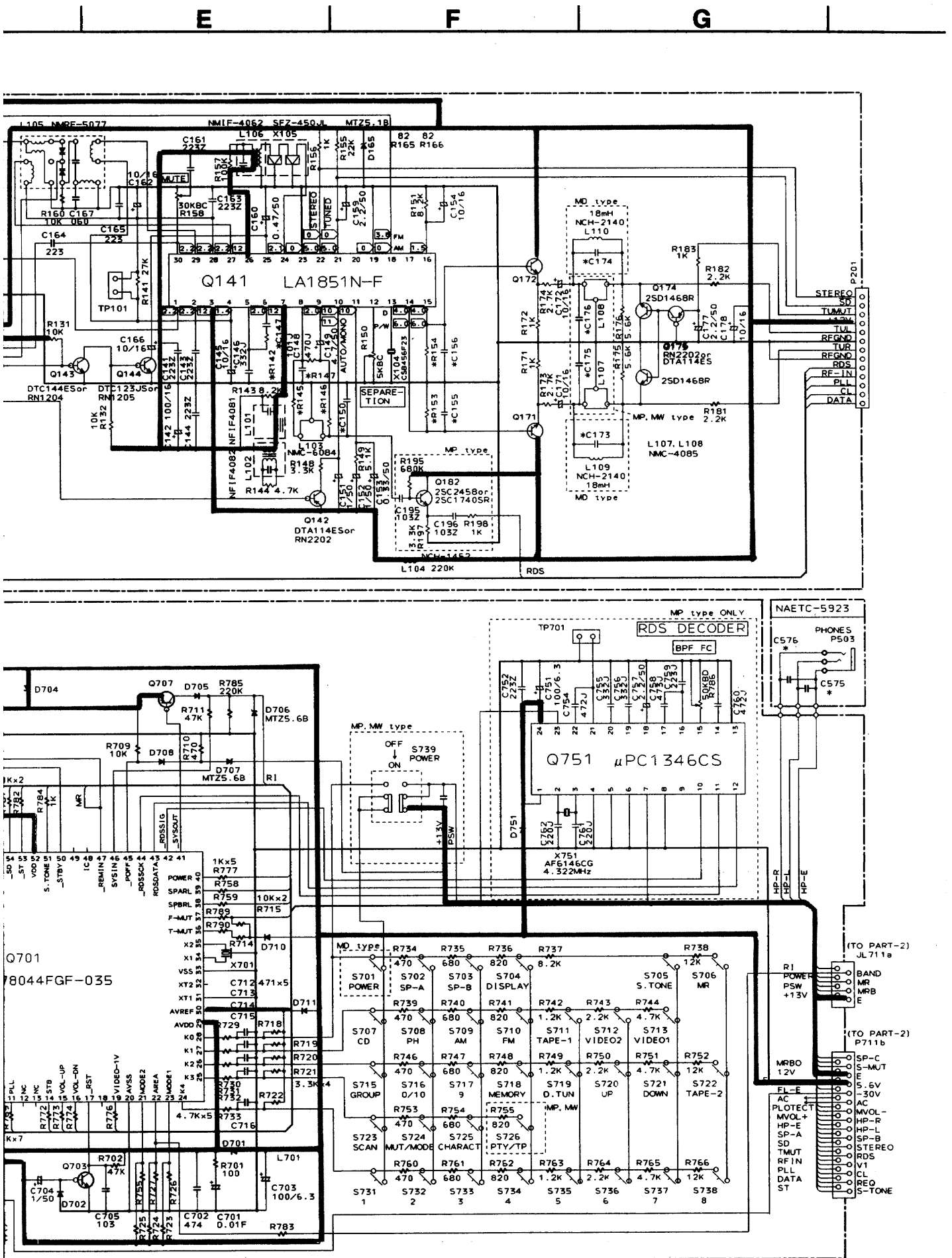
E
F
G
Q141 LA1851N-F
Q142 DTA114ESor RN2202
Q143 DTC144ESor RN1204
Q144 DTC123JSor RN1205
Q171
Q172
Q174 2SD1468R
Q175 RN2202or DTA114ES
Q182 2SC2458or 2SC1740SR
L107, L108 NMC-4085
L109 NCH-2140 18mH
L110 NCH-2140 18mH
L104 220K
L106 X105
L103 NMC-6084
MD type
MP type
MP, MW type
SEPARE-TION
STEREO
TUNED
AUTO/MONO
MUTE
P201
STEREO
SD
TUMUT
TUL
RFGND
TUR
RFGND
RDS
RF-IN
PLL
CL
DATA
RDS
NAETC-5923
PHONES P503
MP type ONLY
RDS DECODER
BPF FC
TP701
Q751 μPC1346CS
X751 AF6146CG 4.322MHz
S739 POWER
OFF
ON
Q701
78044FGF-035
S701 POWER
S702 SP-A
S703 SP-B
S704 DISPLAY
S705 S.TONE
S706 MR
S707 CD
S708 PH
S709 AM
S710 FM
S711 TAPE-1
S712 VIDEO2
S713 VIDEO1
S715 GROUP
S716 0/10
S717 9
S718 MEMORY
S719 D.TUN
S720 UP
S721 DOWN
S722 TAPE-2
S723 SCAN
S724 MUT/MODE
S725 CHARACT
S726 PTY/TP
(TO PART-2) JL711a
(TO PART-2) P711b
BAND
MR
MRB
E
RI
POWER
PSW
+13V
MRBO
12V
SP-C
S-MUT
E
5.6V
-30V
AC
MVOL-
HP-R
HP-L
SP-B
STEREO
RDS
V1
CL
REQ
S-TONE
PLOTECT
MVOL+
HP-E
SP-A
SD
TMUT
RFIN
PLL
DATA
ST

SCHEMATIC DIAGRAM PART-2

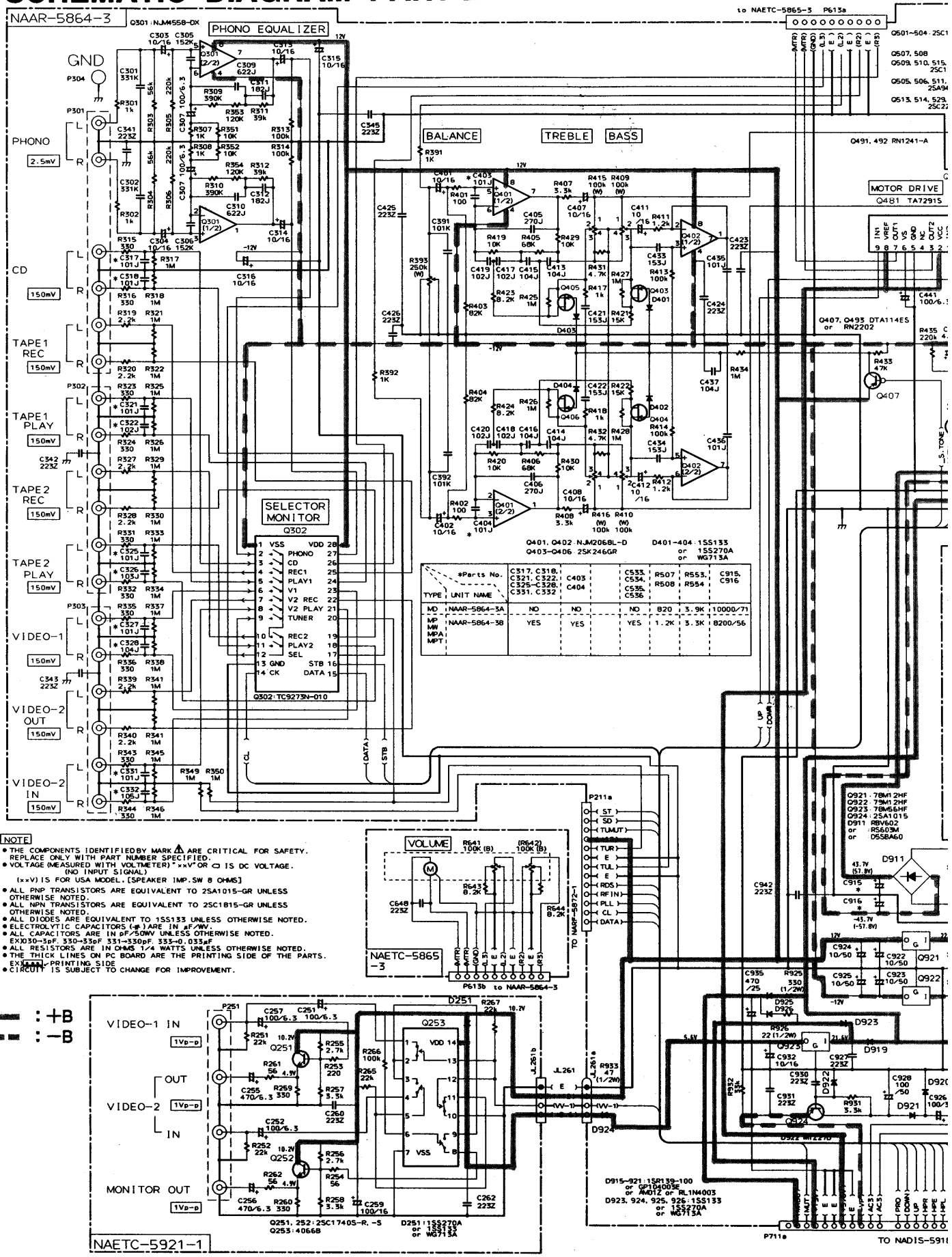

D E F G

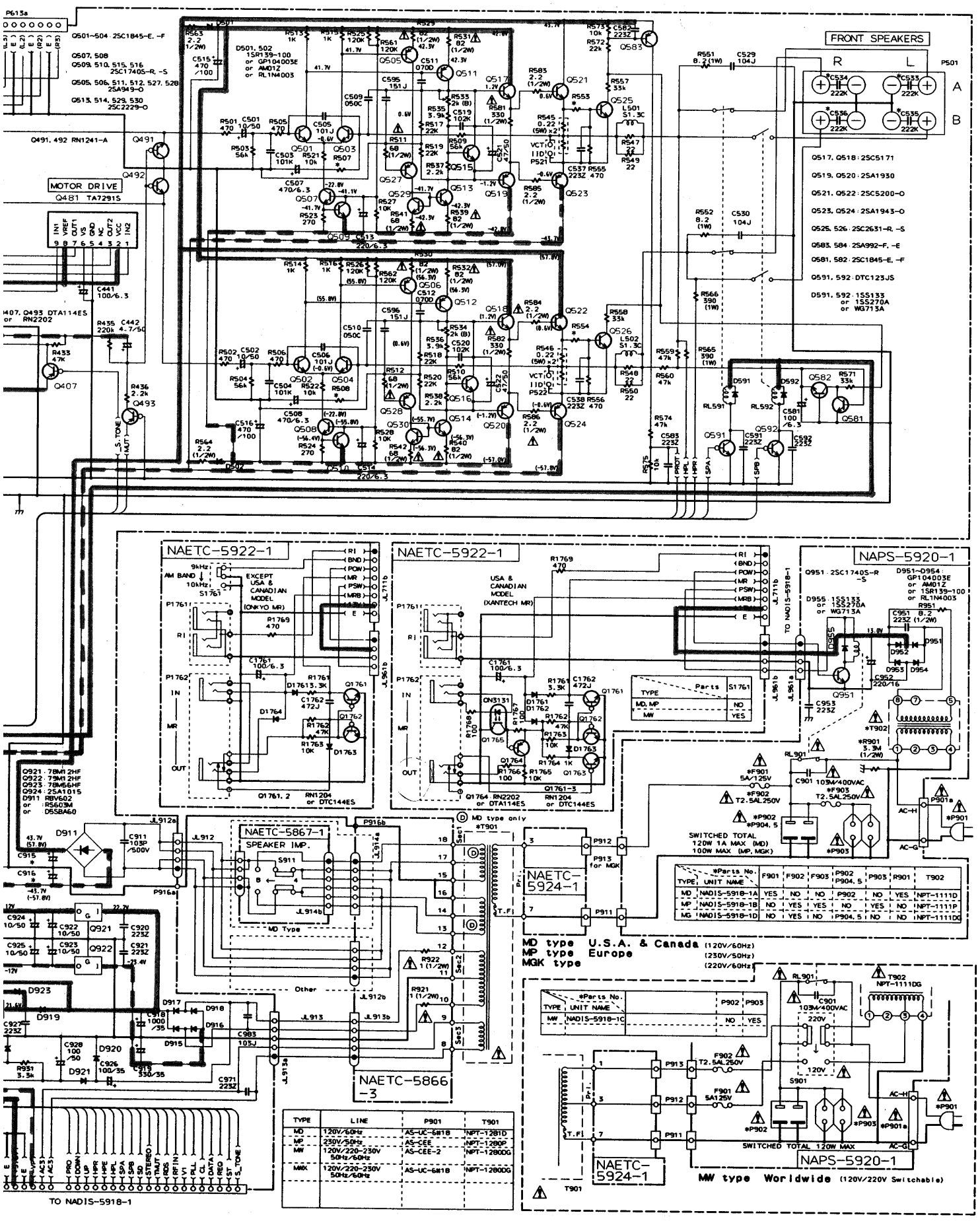
FRONT SPEAKERS
MOTOR DRIVE
Q481 TA7291S
NAETC-5922-1
NAETC-5922-1
NAPS-5920-1
NAETC-5867-1
SPEAKER IMP.
NAETC-5924-1
NAETC-5866-3
NAETC-5924-1
NAPS-5920-1
MD type U.S.A. & Canada (120V/60Hz)
MP type Europe (230V/50Hz)
MGK type (220V/60Hz)
MW type Worldwide (120V/220V Switchable)
TO NADIS-5918-1