NEC Authentic series

STEREO CASSETTE DECK

SERVICE MANUAL

MODEL
AUK-9000E
TYPE (BG) / (SG)

SER. NO. 3038

Better Service
Better Reputation
Better Profit

AUK-9000E(BG)

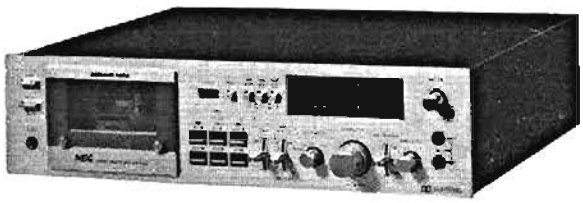

AUK-9000E(SG)

SPECIFICATIONS

MECHANICAL PERFORMANCE	NOMINAL VALUE
Tape Speed	4.75 cm/sec.
Tape Speed Deviation	±0.8%
Tape Speed Variation	0.3%
Wow & Flutter	0.045% WRMS
Fast Forward Time	98 sec. with C60
Rewind Time	98 sec. with C60

ELECTRICAL PERFORMANCE	NOMINAL VALUE
Bias OSC Frequency	105 KHz
Playback Sensitivity	580mV (with TEAC MTT150 test tape)
Frequency Response:	
Normal	20–14,000 Hz
CrO_2/FeCr	20–16,000 Hz
Metal	20–16,000 Hz
Recording Input Sensitivity:	
MIC/DIN	0.3 mV/4.7 KΩ
LINE	70 mV/47 KΩ
REC/PLAY Sensitivity:	
Normal	580 mV
CrO_2	580 mV
REC/PLAY Distortion at 0 VU:	
Normal	1.0%
CrO_2	2.0%

Signal to Noise Ratio:	Dolby NR Off	Dolby NR On
Normal	55 dB	64 dB
CrO_2/FeCr	59 dB	66 dB
Metal	63 dB	70 dB
Erasing Capability		66 dB
Crosstalk between Channels		45 dB at 1 KHz
Dolby NR Effect		10 dB

OTHER SPECIFICATIONS

Power Supply:	
Voltage (V AC)	110/120/220/240
Hertz (Hz)	50/60
Dimensions	450 (W) x 110 (H) x 340 (D) mm
Standard Accessory:	
L & R Stereo Pin Cord Set	2 pairs
Owners Manual	1 piece

NOTE:

- The above specifications are subject to change without notice for further improvement.
- Noise reduction system manufactured under license from Dolby Laboratories.
  "Dolby", "Dolbyized" and the double-D symbol are trade marks of Dolby Laboratories.

Nippon Electric Co.,Ltd.
TOKYO, JAPAN

DISASSEMBLY INSTRUCTIONS

Removing cabinet top and bottom cover as shown below.

1. Remove four cabinet screws (A) from left and right sides and lift off cabinet.
2. Remove nine bottom cover screws (C) and lift off bottom cover.

Removing front panel as shown below.

Remove six screws (B) from chassis and lift off front panel.

NOTE: Before removing front panel, be sure to take off three knobs (Timer, Dolby and Input Selector).

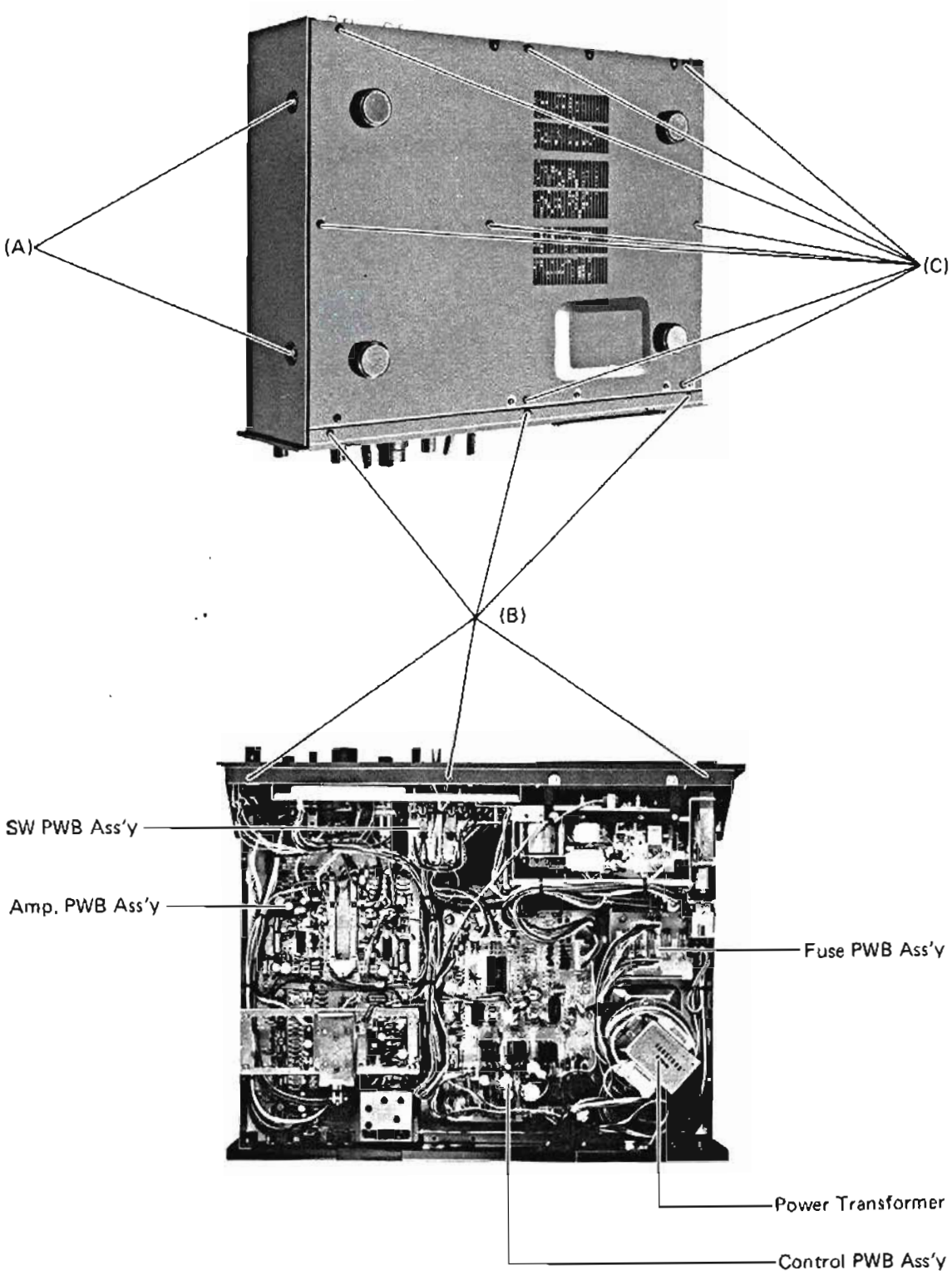

ALIGNMENT PROCEDURE

1. **Adjustment of azimuth**

   Play back TEAC MTT-114 or Phillips TC-A10 and adjust the azimuth of the R/P head by manipulating the adjusting screw so as to maximize the output.
   After the adjustment, be sure to fix the adjusting screw in place with a screw locking agent.

2. **Adjustment of playback sensitivity**

   Conditions:
   a. The playback volume control, if equipped, is set at the maximum.
   b. Dolby NR switch is on.
   c. The tape selector is set at Fe_2O_3.

   Play back Dolby calibration tape (TEAC MTT-150) and adjust AVR101 (Lch) and AVR201 (Rch) so as to obtain the line output of 580 mV.

3. **Adjustment of level meter**

   Conditions:
   a. The playback volume control, if equipped, is set at the maximum.
   b. Dolby NR switch is on.
   c. The tape selector is set at Fe_2O_3.

   After making sure that the line output of 580 mV has been obtained as a result of the adjustment made as instructed in Item 2 above, turn AVR103 (Lch) and AVR203 (Rch) so as to cause the level meter to point at +3 dB.

4. **Adjsutment of bias**

   Actuate the instrument for sound recording.
   (1) Set the tape selector at the METAL position and turn AVR301 so as to set the voltage at either end of C303 at 25V.
   (2) Turn AVR104 (Lch) and AVR204 (Rch) so as to set the voltage at either end of R101 (Lch) and that of R201 (Rch) at 1.2 mV (1200 μA).
   (3) Measure the record/playback frequency characteristics at 333 Hz and 14 KHz using a metal tape and make sure that the level meter points at a range of +1 to −3 dB. If it does not come in this range, finely adjust the bias current.
   (4) Also, measure it using CrO_2 and FeCr tapes respectively and make sure that the level meter points at the same range. If it does not come in the range, turn AVR302 finely for adjustment when the CrO_2 tape is used and AVR303 in case of the FeCr tape.
   (5) Measure the record/playback frequency characteristics at 333 Hz and 12.5 KHz using Fe_2O_3 tape and make sure that the level meter points at the same range. If it does not, turn AVR304 finely for adjustment.

   Standard bias current

   NOTE:
   i) Generally speaking, as the bias current increases, the frequency response of high frequency range deteriorates and the distortion factor improves.
   ii) Generally speaking, as the bias current descreases, the frequency response of high frequency range improves and the distortion factor deteriorates.
   iii) After adjusting the bias current with the above fact kept in mind, check the distortion factor and the R/P sensitivity without fail.

5. **Adjustment of record/playback sensitivity**

   Input the signal of 333 Hz, 100 mV as line input and manipulate the recording volume control so as to set the line output at 580 mV. (The playback volume control is set at the maximum.)
   Make sure that the line output is 580 mV when the record/playback are performed on metal tape with the instrument set under the above condition.
   If the line output is more or less, adjust it by manipulating AVR102 (Lch) and AVR202 (Rch).

6. **Adjustment of tape speed.**

   Play back TEAC MTT-111 and adjust the motor by manipulating the motor control so as to set the frequency of the line output at 3 KHz.

ALIGNMENT LOCATION

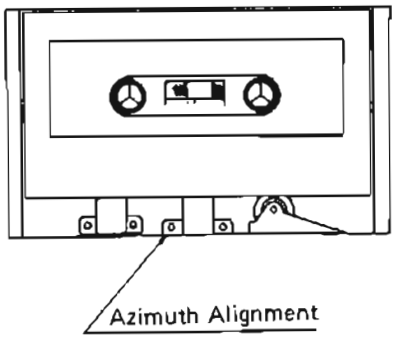

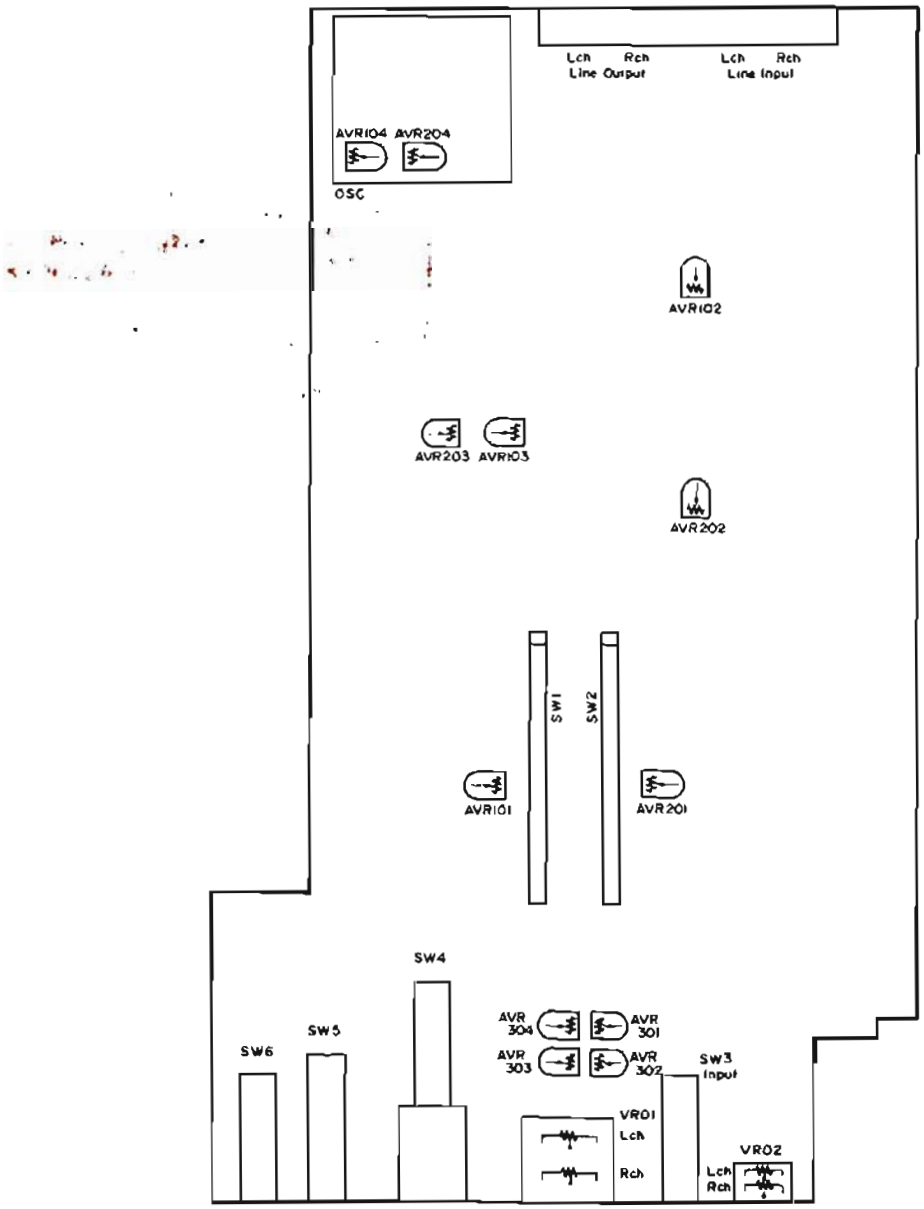

EXPLANATION OF CIRCUIT

1. **PLAY-mode operation** (Refer to Fig. 2.)

When PLAY switch is closed (by pressing it), the head chassis rises to push pinch roller against capstan, and the DC servo motor begins to drive take-up reel. The sequence of events leading to the rise of the head chassis and the starting of the motor is as follows:

Pressing, PLAY switch (SW-18) drives pin (4) (of IC503) to GND level — from "H" to "L" — so that, by inversion, pin (15) goes up to "H" to switch on TR610: this "H" level applies through panel-lock switch (SW-12), which is presently in "down" position to bridge M5 to M4 terminal, and through D609.

As TR610 starts conducting, TR609 becomes conductive to pass a current through pull solenoid. Now energized, this solenoid raises the head chassis to bring pinch roller into contact with capstan.

NOTE:

In STOP, FF, REW and PAUSE modes, the head chassis stays in its "down" position, keeping pinch roller separated from capstan.

There being a link between pull solenoid and panel-lock switch (SW12), this switch is caused to shift to "lock" side, bridging M5 to M3. Consequently, "H" level applies to the base of TR608 to switch on this transistor and, on the other hand, TR610 and TR609 go off to de-energize pull solenoid.

But brake solenoid is energized through TR608, which has just been switched on: this solenoid now locks the head chassis in "up" position.

Let's go back to the change in potential from "L" to "H" at pin (15) of IC503. The "H" level applies through D604 to the base of TR602 to switch on this transistor and thereby drive down the base of TR605 to switch it on. With TR605 made conductive, a current flows through drive motor (M) to run the take-up reel. The path of this load current is indicated in Fig. 1.

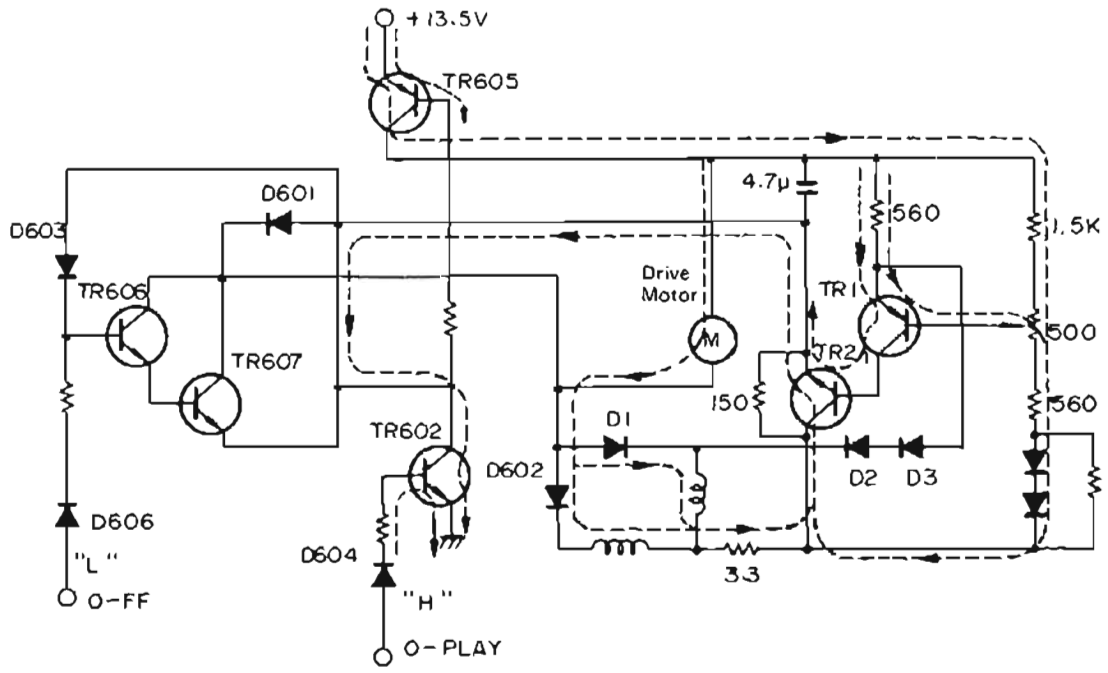

Fig. 1

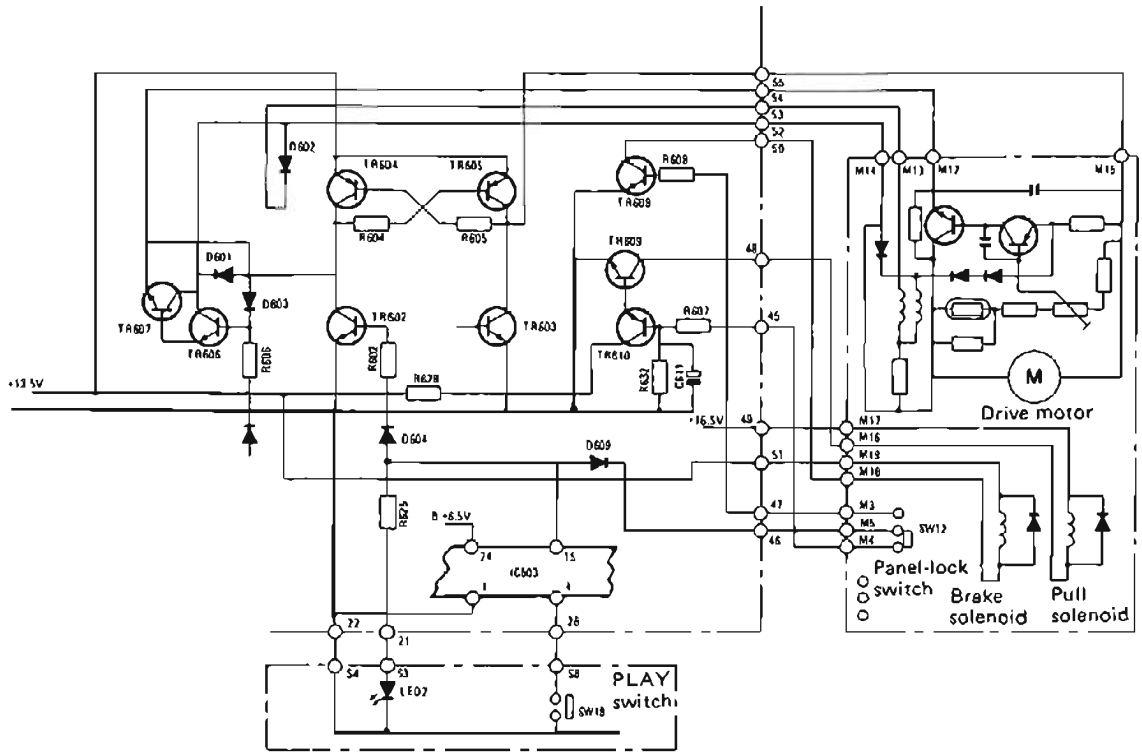

TIMING CHART

Play-Back Operation

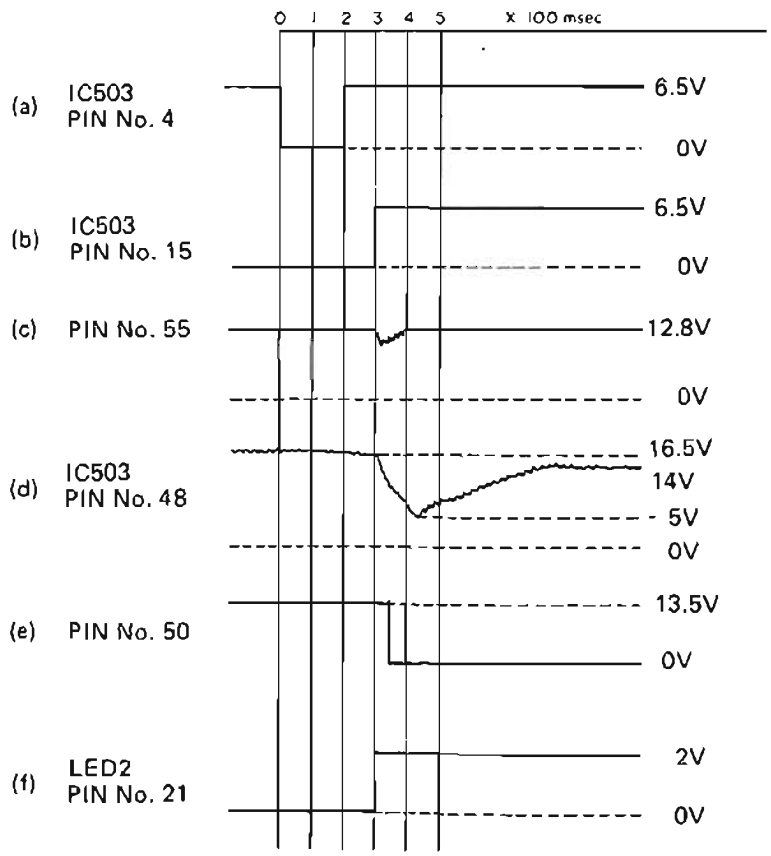

Fig. 2

FLOW CHART FOR TROUBLE SHOOTING

Play-Back Operation

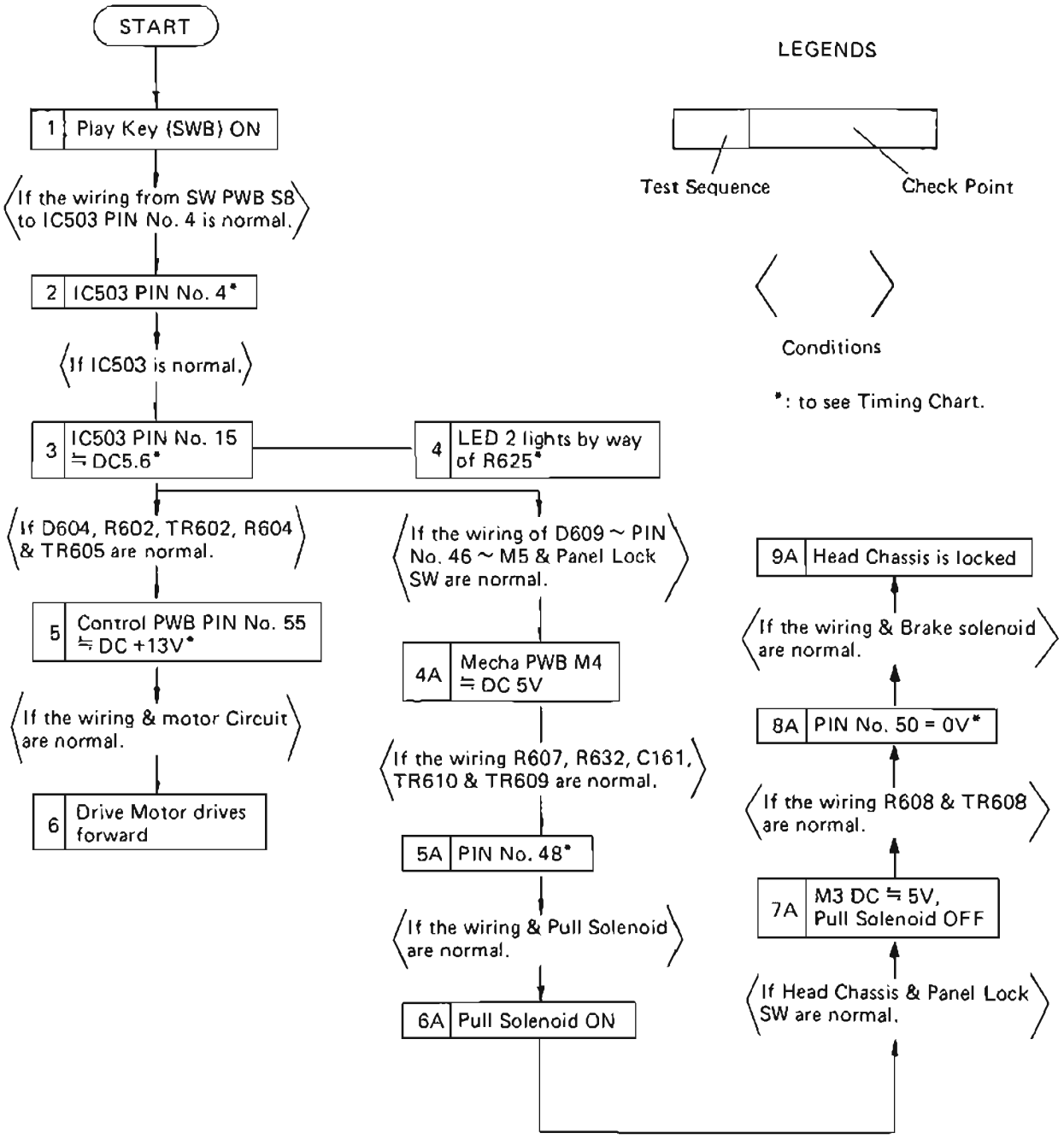

Fig. 3

2. REC-mode operaiton (Refer to Fig. 4.)

Suppose PLAY switch (SW-18) and REC switch (SW-19) are pressed at the same time: this will change the level from "H" to "L" at pins (4) and (5) of IC503 and, correspondingly, from "L" to "H" at pins (15) and (16).

If the anti-erasure pin or finger of the tape case had been removed, the tape would refuse to be recorded on: REC safety switch would remain closed so that pin (5) will not go down to "L". In other words, instead of PLAY/REC mode, PLAY mode will be introduced.

Pins (15) and (16) of IC503 are connected to pins (1) and (2) of IC501 through CR circuits, whose time constant is such that, at the moment the level of pins (15) and (16) jumps to "H" (5.6 volts), the level of pins (1) and (2) begins to fall gradually from its "H" level (5.6 volts) and the level of pin (3) jumps to "H" (5 volts). These changes are illustrated by waveforms (c), (d) and (e) of Fig. 4.

At 2.8 volts of falling voltage, waveform (d), output pin (3) dips to "L" so that it would appear that a pulse has issued forth from this pin. This pulse-like change is then differentiated by C601 and R609 to result in a sharp-pointed wave (whose form is like the one indicated in the circuit diagram of Fig. 4) applying to the base of TR407 through R408.

By this signal, TR407 turns on to drive down the base of TR405. Consequently, TR405 and TR406 are switched on to impress +34 volts to REC solenoid: this energization of REC solenoid is momentary.

Referring back to the moment pin (16) of IC503 rises to "H", it will be seen that TR611 becomes conductive because its base is connected to this pin through R622. With TR611 being conductive, an energizing current flows through RC solenoid to move and shift REC/PLAY sliding switch to recording side by means of the solenoid plunger.

Three transistors, TR405 ~ TR407, serve as the means of high-current energization of REC solenoid during the short interval in which both PLAY and REC key switches are pressed. When either switch is released, TR406 turns off to shut off +37 volts applying to REC solenoid but this solenoid remains energized from the +16.5-volt source if REC switch is kept in pressed-down condition, as will be noted in waveform (f), Fig. 4.

The actions of drive motor and head chassis for the foregoing sequence of events are the same as in the PLAY-mode operation.

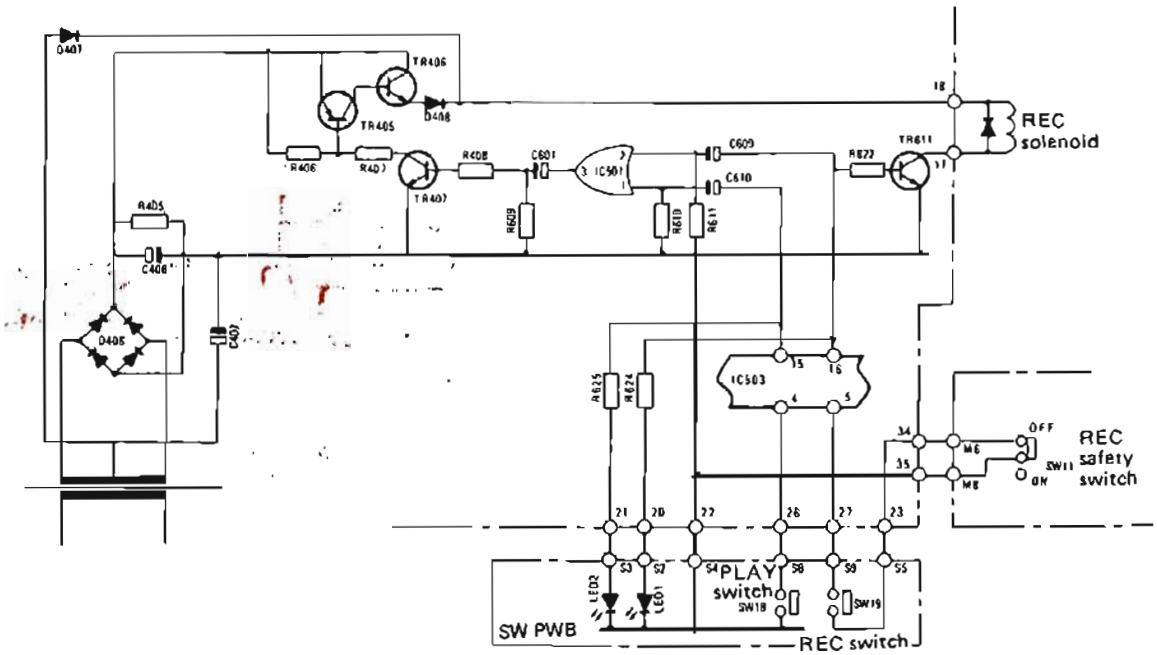

Fig. 4

TIMING CHART

REC Solenoid Operation

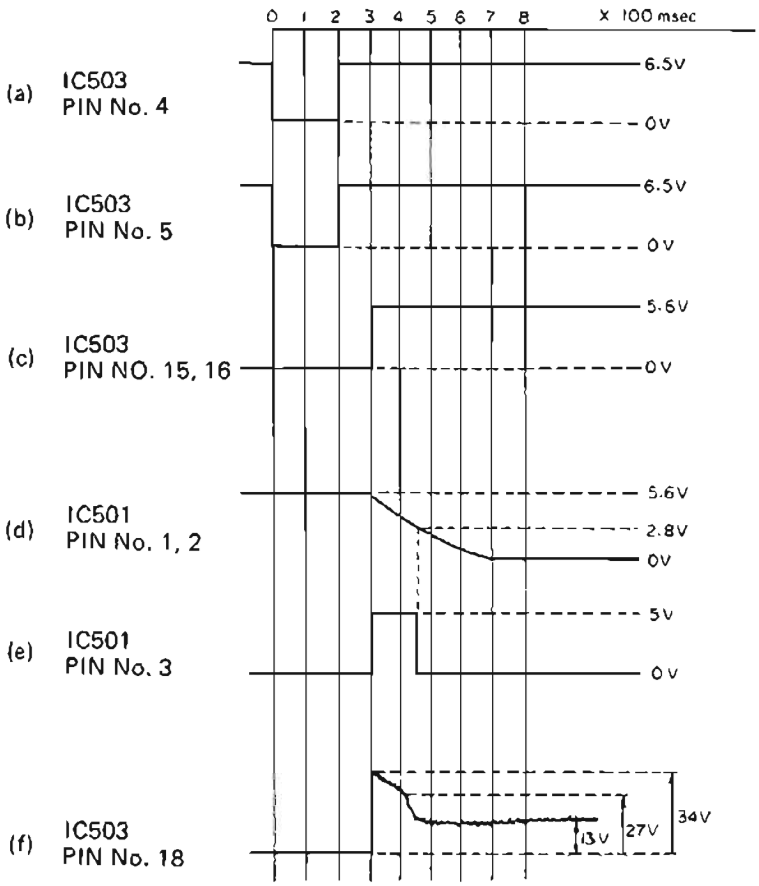

Fig. 5

FLOW CHART FOR TROUBLE SHOOTING
REC Solenoid Operation

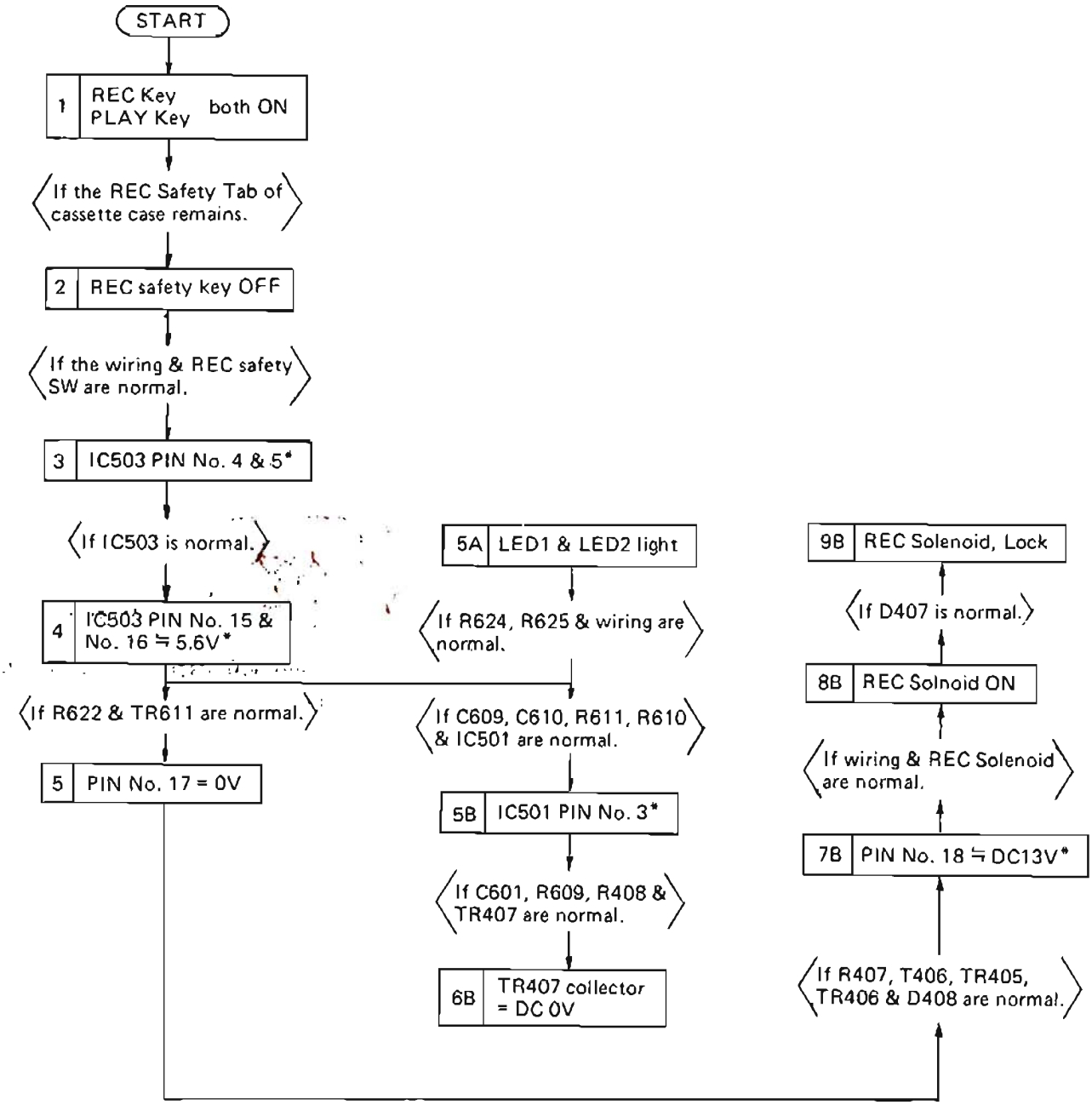

Fig. 6

3. FF-mode operation (Refer to Fig. 8.)

In the circuit diagram of Fig. 8, FF switch (SW-17) is indicated. Pressing this switch causes pin (22) of IC503 to instantly rise to "H". This "H" level applies to the base of TR608 through panel-down switch and, by switching on this transistor, allows brake solenoid to be energized from the +13.6-volt source.

The same "H" level applies to the bases of TR602 and TR606 through D605 and D606, respectively, to switch on these transistors. The resultant flows of current are as shown in Fig. 7. Load current flows through TR605, drive motor (M), TR607 and TR602, and the motor runs in normal direction to transport the tape at FF (fast-forward) speed.

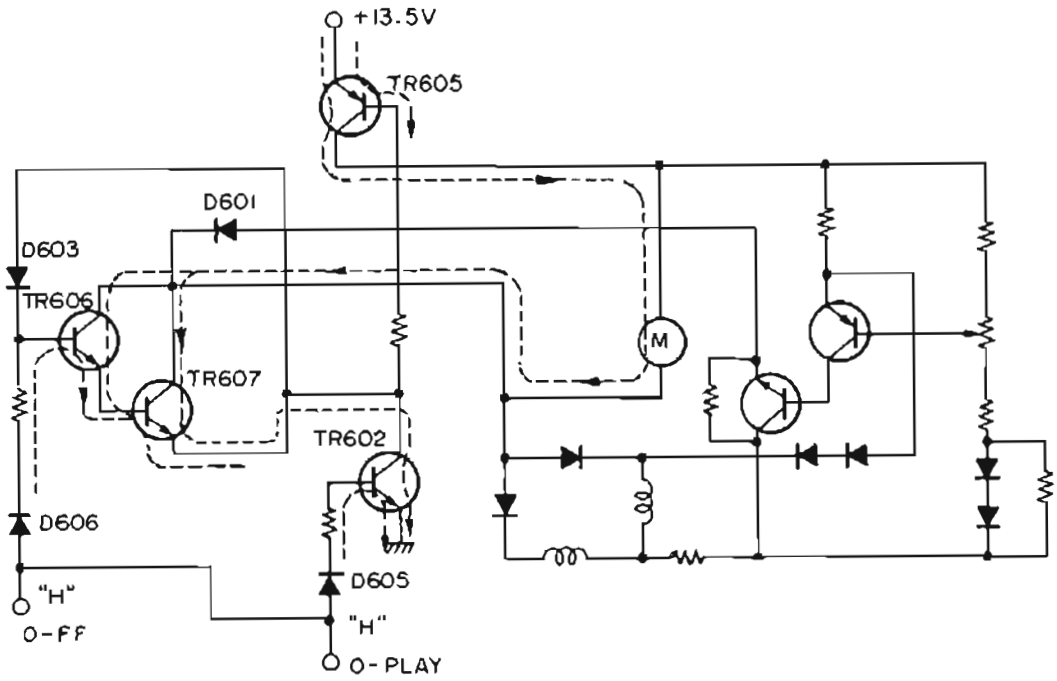

Fig. 7

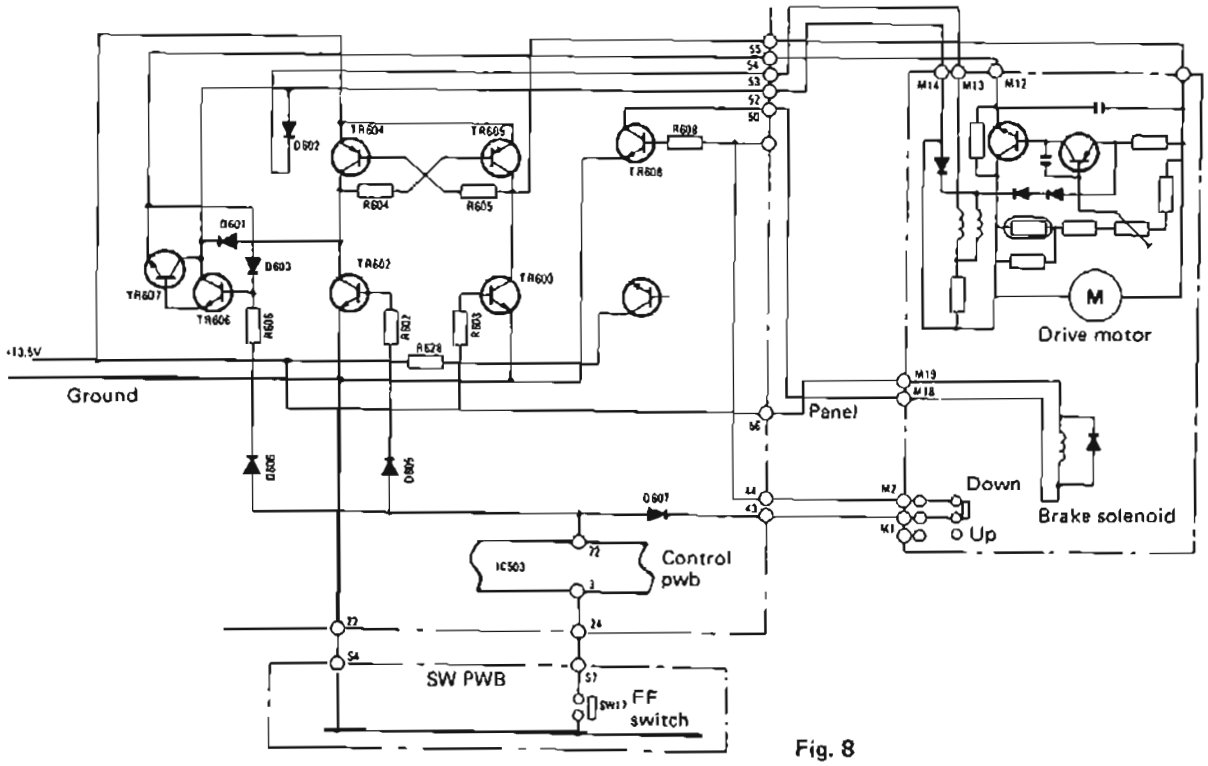

Fig. 8

TIMING CHART

FF Operation

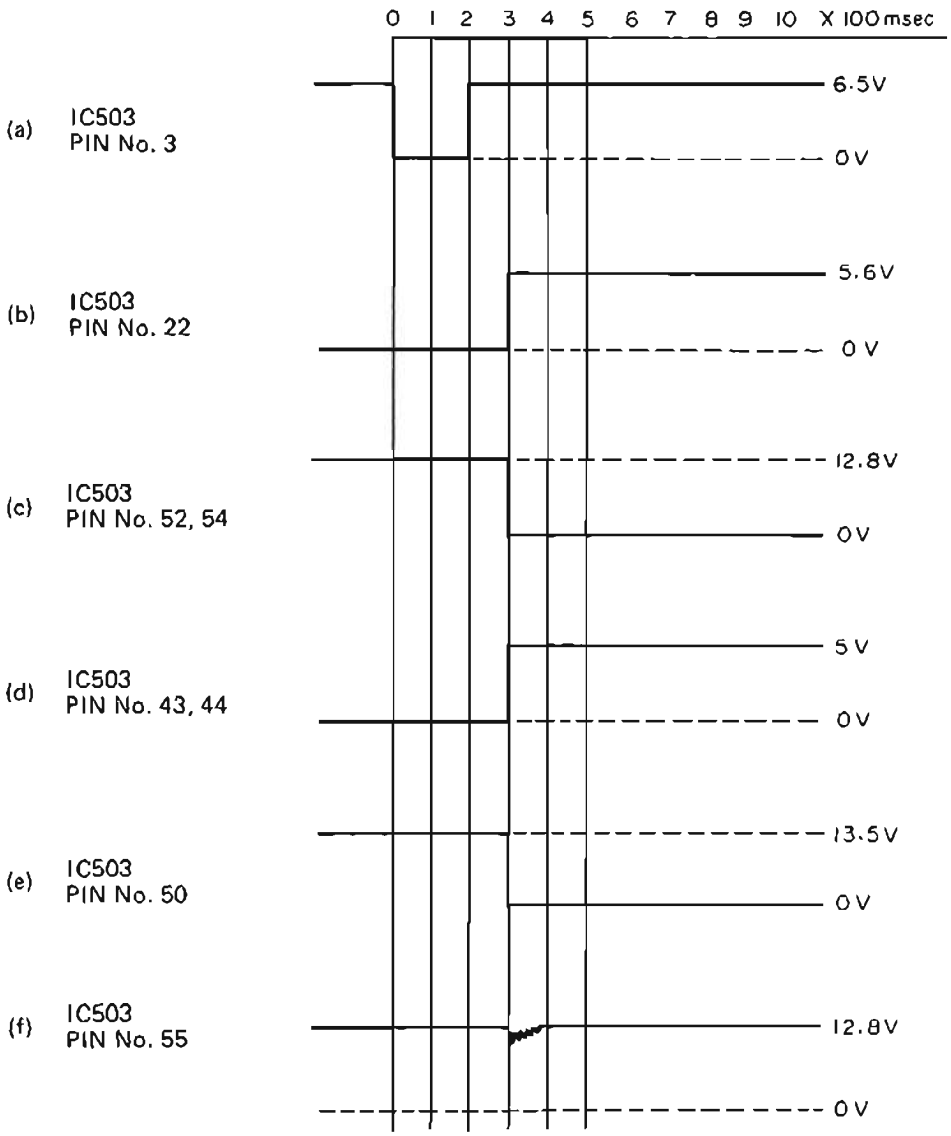

Fig. 9

FLOW CHART FOR TROUBLE SHOOTING

FF Operation

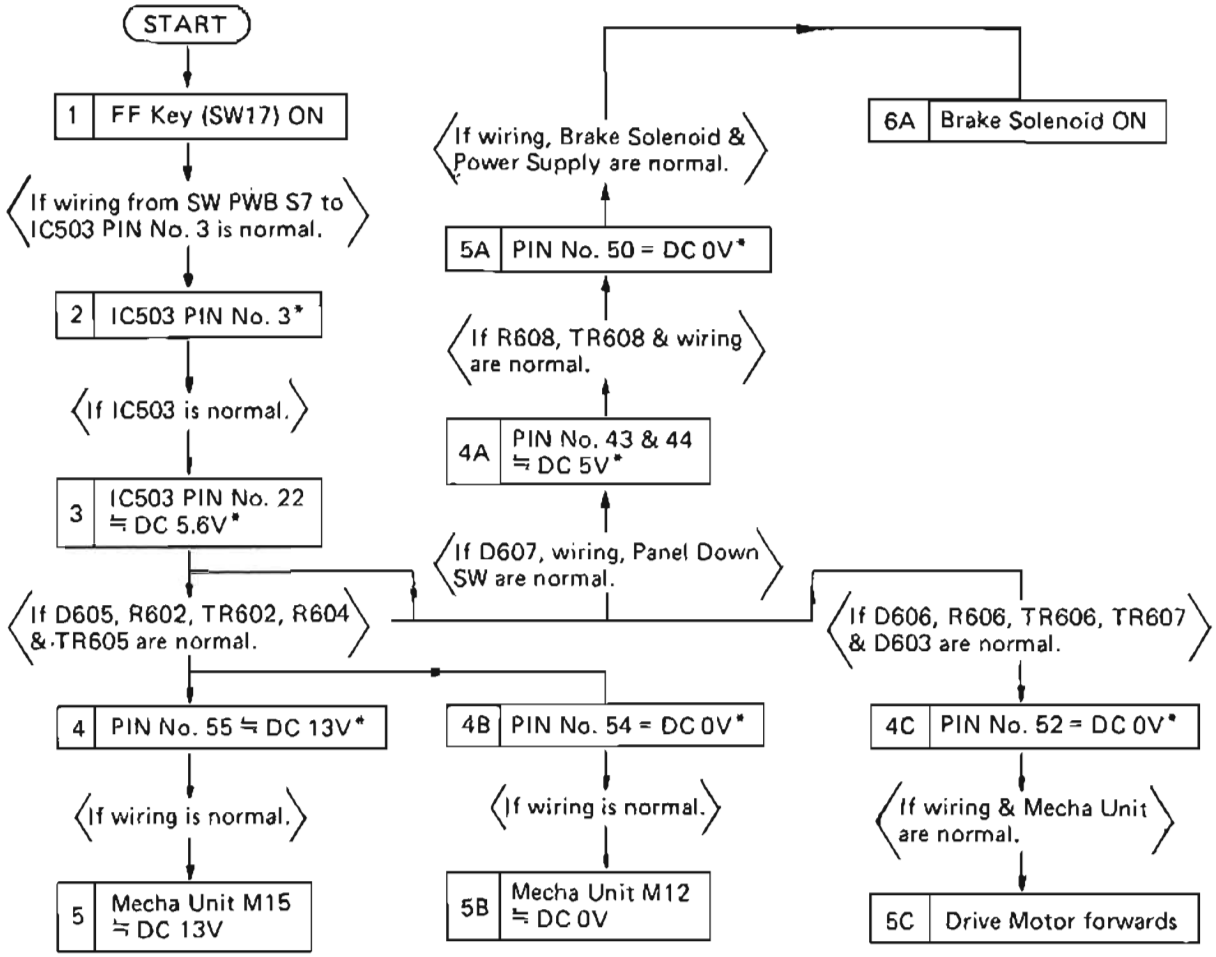

Fig. 10

4. REW-mode operation (See Fig. 13.)

Pressing REW switch (SW-16) change the level from "H" to "L" at pin (2) and from "L" to "H" at pin (21) of IC503. With "H" applying to the base of TR608 through D608 and panel-down switch, this transistor turns on to energize brake solenoid. The same "H" switches on TR603 at the same time, so TR604 too turns on. With TR603 and TR604 conducting, load current for drive motor (M) flows as shown in Fig. 11 so that the motor runs in reverse direction for tape rewinding

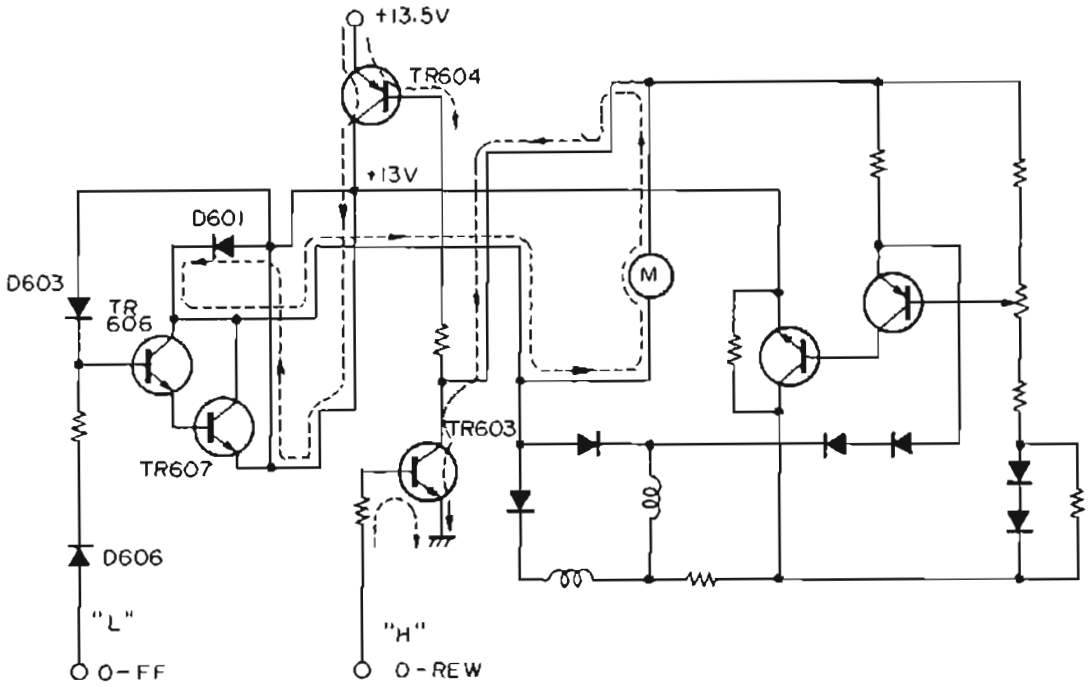

Fig. 11

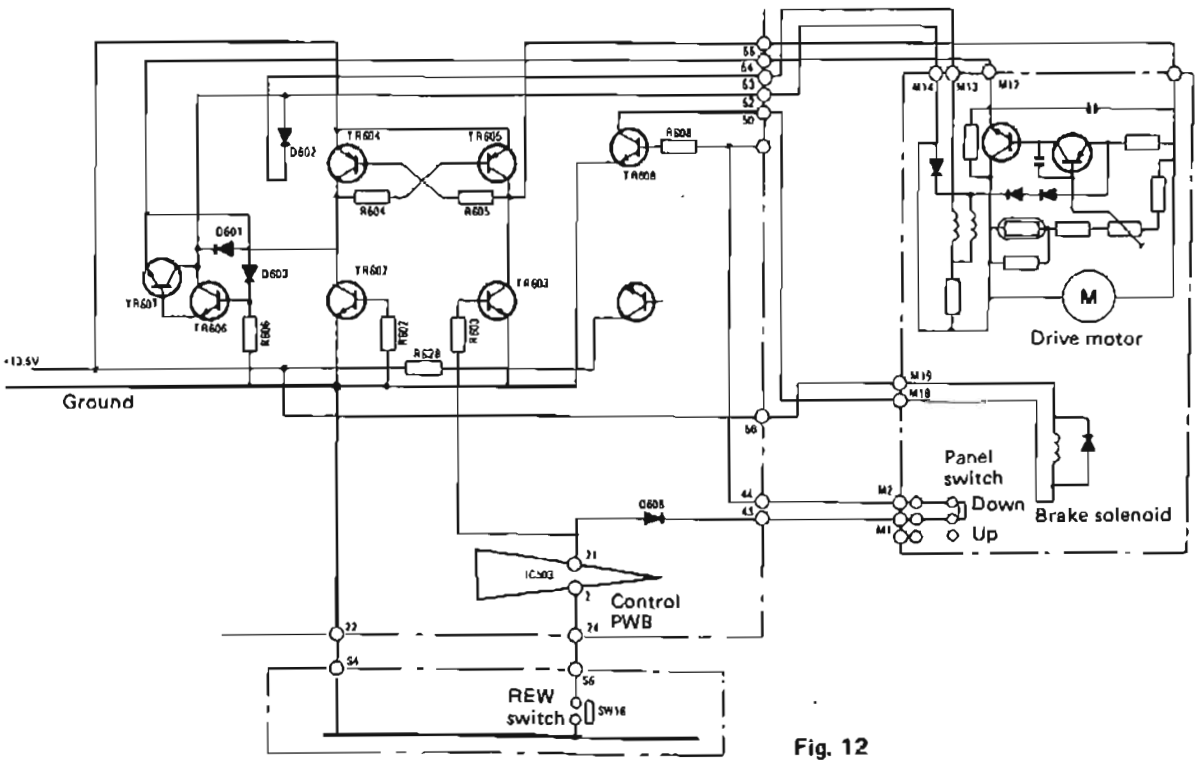

Fig. 12

TIMING CHART

RWD Operation

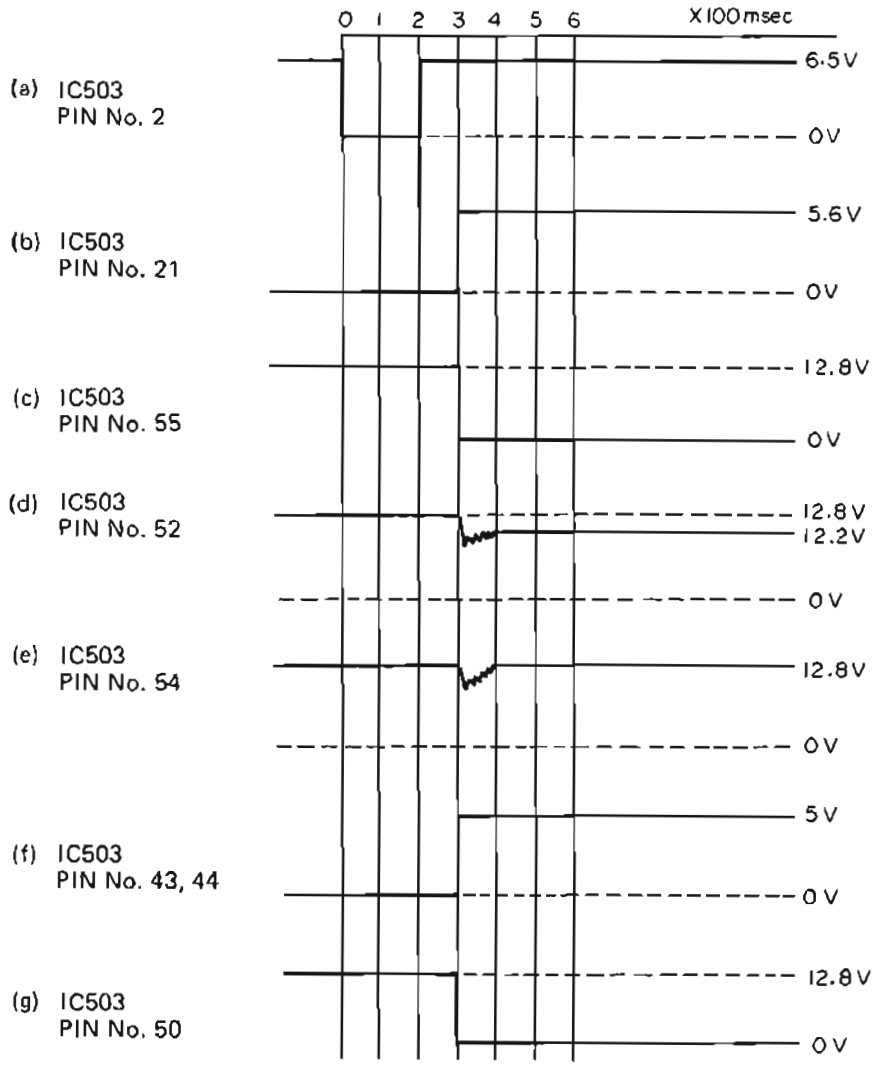

Fig. 13

FLOW CHART FOR TROUBLE SHOOTING

RWD Operation

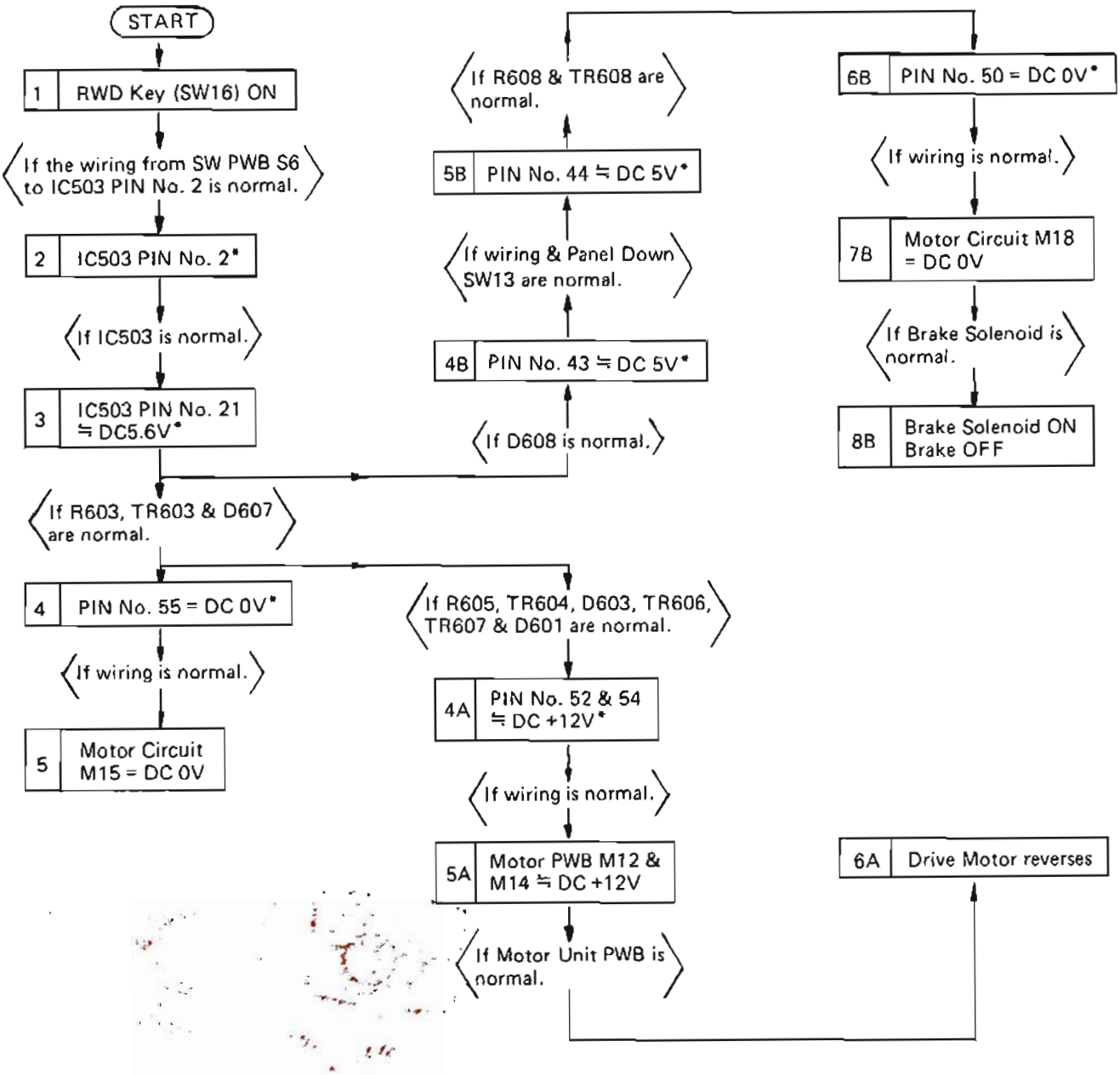

Fig. 14

5. PAUSE-mode operation (See Fig. 15.)

5-1 Pausing in STOP mode

Pressing PAUSE switch (SW-21) changes the level from "H" to "L" at pin (7) and from "L" to "H" at pin (19) of IC503, so that LED-3 lights up. Pin (15) of IC503 remains at "L"; the head chassis is down; and the drive motor is at standstill.

5-2 Pausing in PLAY mode

In PLAY mode, pin (15) is at "H"; panel-lock switch is on M3 side; TR608 is on; and brake solenoid is in energized state to keep the head chassis locked. On the other hand, the drive motor is running.

Under this condition, pressing PAUSE switch causes pin (15) to drop to "L" to switch off TR608 and de-energize brake solenoid, so that the head chassis goes down. TR602, too, turns off to stop the drive motor.

Pressing PAUSE switch again causes pin (15) to return to "H", thereby restoring the deck to PLAY mode. When the deck is in PAUSE mode, pin (19) is at "H", so that LED-3 remains on, just as in pausing in STOP mode: this applies to pausing in any mode.

5-3 Pausing in REC/PLAY mode

In REC/PLAY mode, pin (15) and pin (16) of IC503 are both at "H". Pressing PAUSE switch drives pin (15) to "L" but pin (16) remains at "H". So, both brake solenoid and drive motor are turned off.

By pin (16) at "H", LED-1 remains lit to signify the pause in RECORDING mode. Pin (19) is of caurse at "H" to light up LED-3. In other words, two LEDs show that the deck is in REC-and-PAUSE mode.

Pressing PAUSE switch again reverts pin (15) to "H" to restore the deck to REC mode.

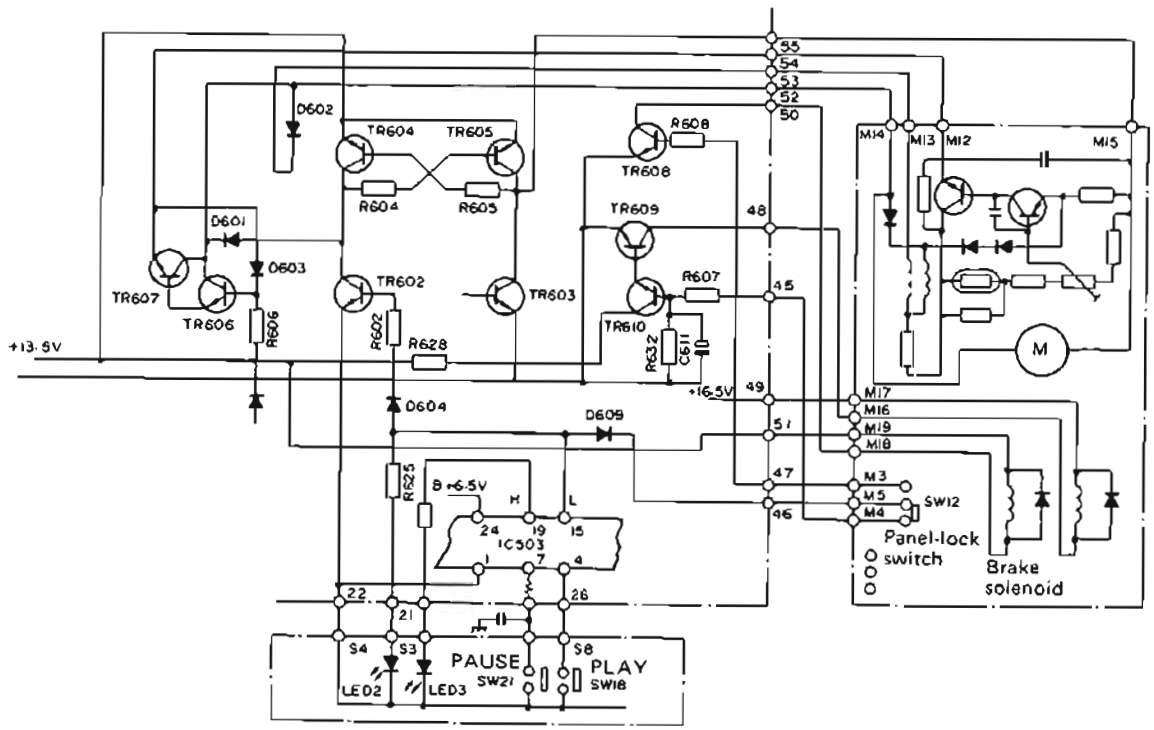

Fig. 15

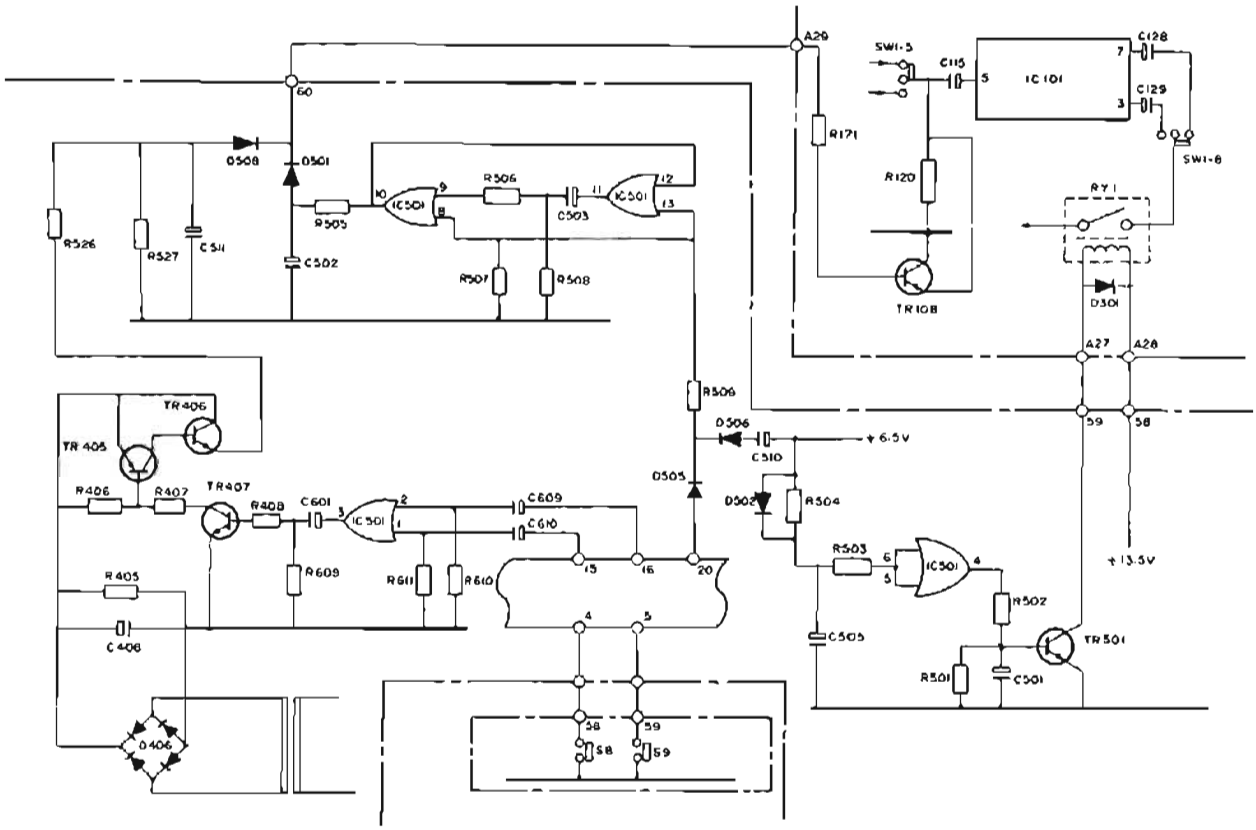
A29
SW1-5
C115
IC101
C128
C129
SW1-8
R171
R120
TR108
RY1
D301
A27
A28
59
58
60
D508
D501
R526
R527
C511
R505
IC501
R506
C503
C502
R507
R508
R509
D506
C510
+6.5V
D505
D502
R504
R503
R502
C505
TR501
R501
C501
+13.5V
TR406
TR405
R406
R407
TR407
R408
C601
C609
C610
R609
R611
R610
R405
C408
D406
S8
S9

Fig. 16

Timing Chart (B) (C)

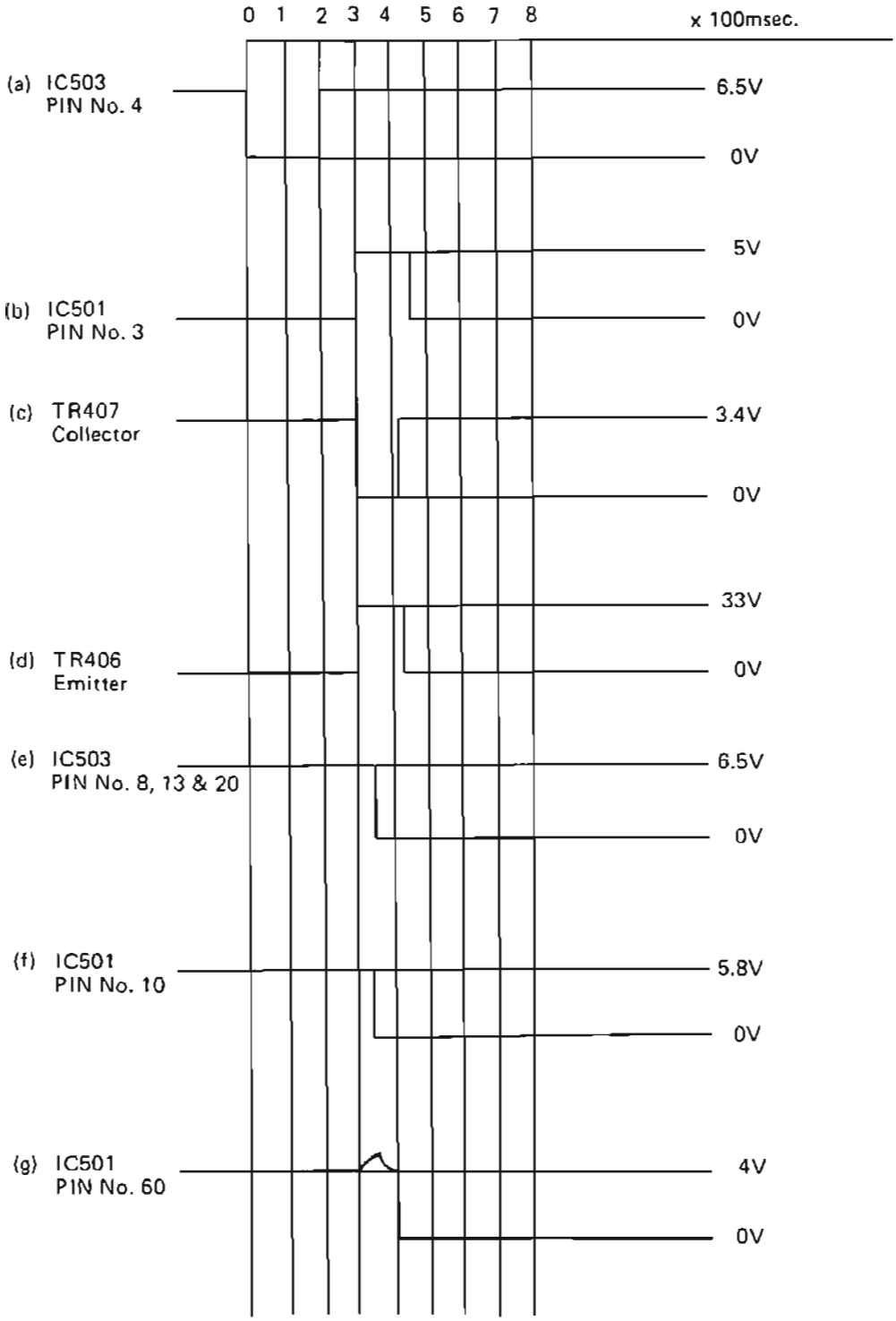

FLOW CHART FOR TROUBLE SHOOTING

Muting System Operation 1

(A) POWER MUTING

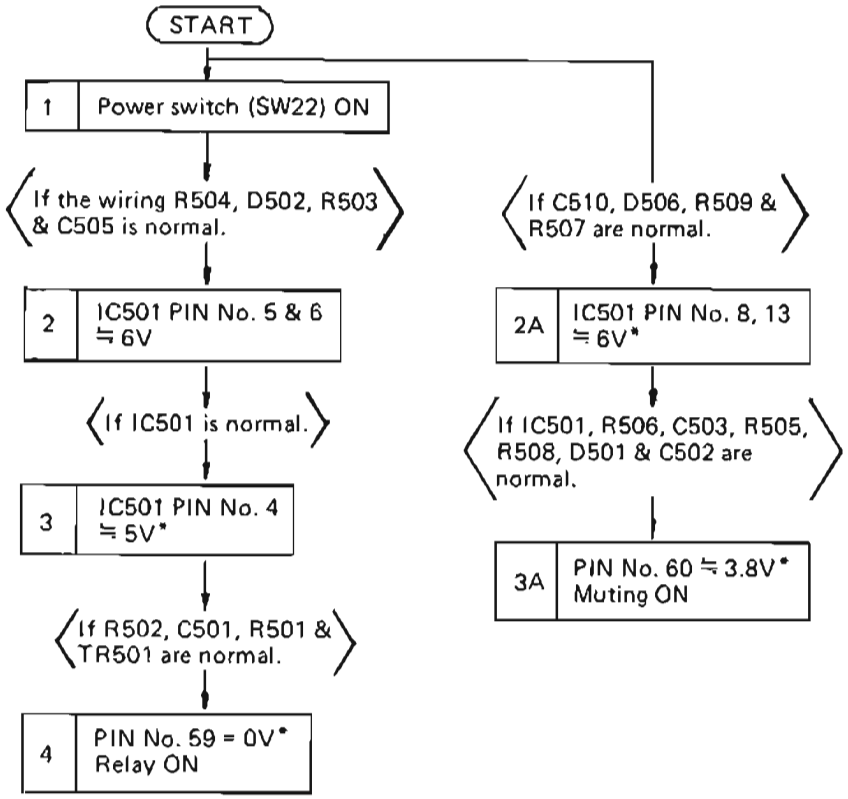

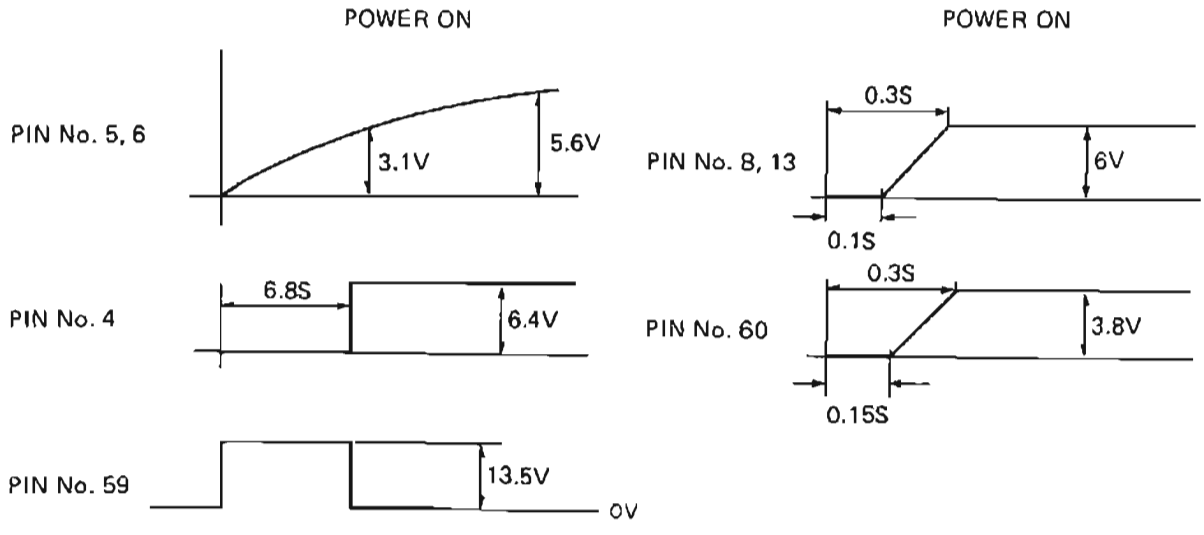

Fig. 17

FLOW CHART FOR TROUBLE SHOOTING

Muting System Operation 2

(B) PLAY MUTING

(C) REC MUTING

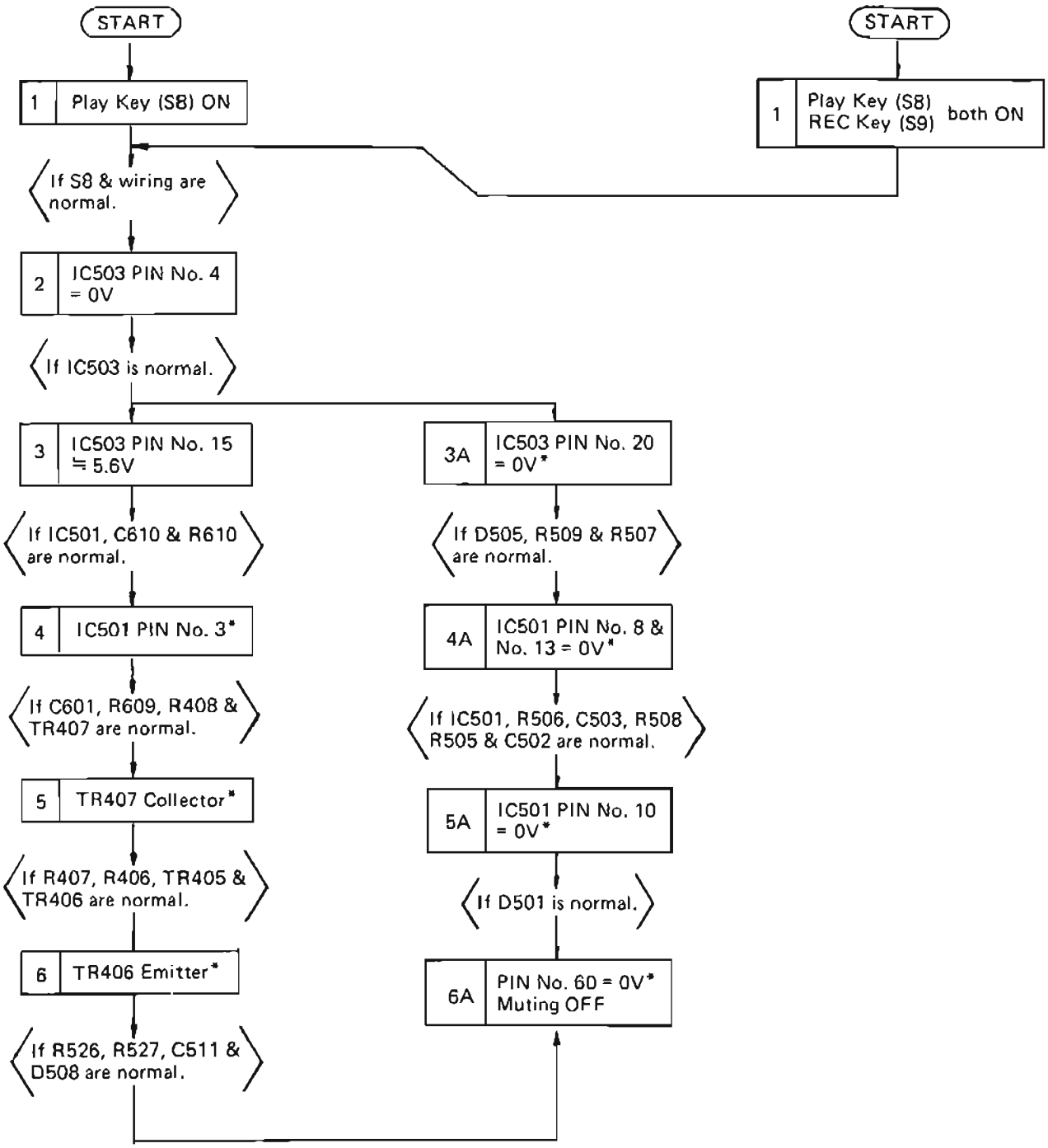

Fig. 18

6. AUTO STOP (See Fig. 19.)

When the tape comes to its end in PLAY, REC, FF or REW mode, the magnet stops rotating and the Hole IC504 ceases to operate: no signal emerges from this IC.

Pin (6) of IC502 remains at "L" level because no signal comes in from IC504, whereas the other pin (5) is always at "L" except when the deck is in PAUSE mode. Pins (5) and (6) being at "L", output pin (4) of this IC is at "H" and this level is inverted and shows up as "L" signal at pin (3) connected to pin (12) of IC503. With pin (12) at "L", pin (15) changes its level from "H" to "L" to turn off brake solenoid and drive motor, resulting in STOP mode.

7. AUTO PLAY (See Fig. 19.)

When the tape comes to its start at the end of rewinding, it halts and induces a temporary STOP mode by the action of the auto-stop circuit. If AUTO-PLAY switch (SW-9) has been set in "on" position, pin (9) of IC503 remains at "L", so that pin (15) rises to "H" to shift the deck to PLAY mode, as if PLAY switch had been pressed.

8. AUTO STOP by memory switch (See Fig. 19.)

Memory switch (SW-7) and counter switch (SW-10) are connected in series to pin (11) of IC503. With memory switch left in "on" position, suppose that counter switch closes as the count goes down to all-zero "000" in the counter: this short-circuits pin (11) to ground, thereby driving its level to "L" and causing pin (15) to rise to "H" to result in STOP mode.

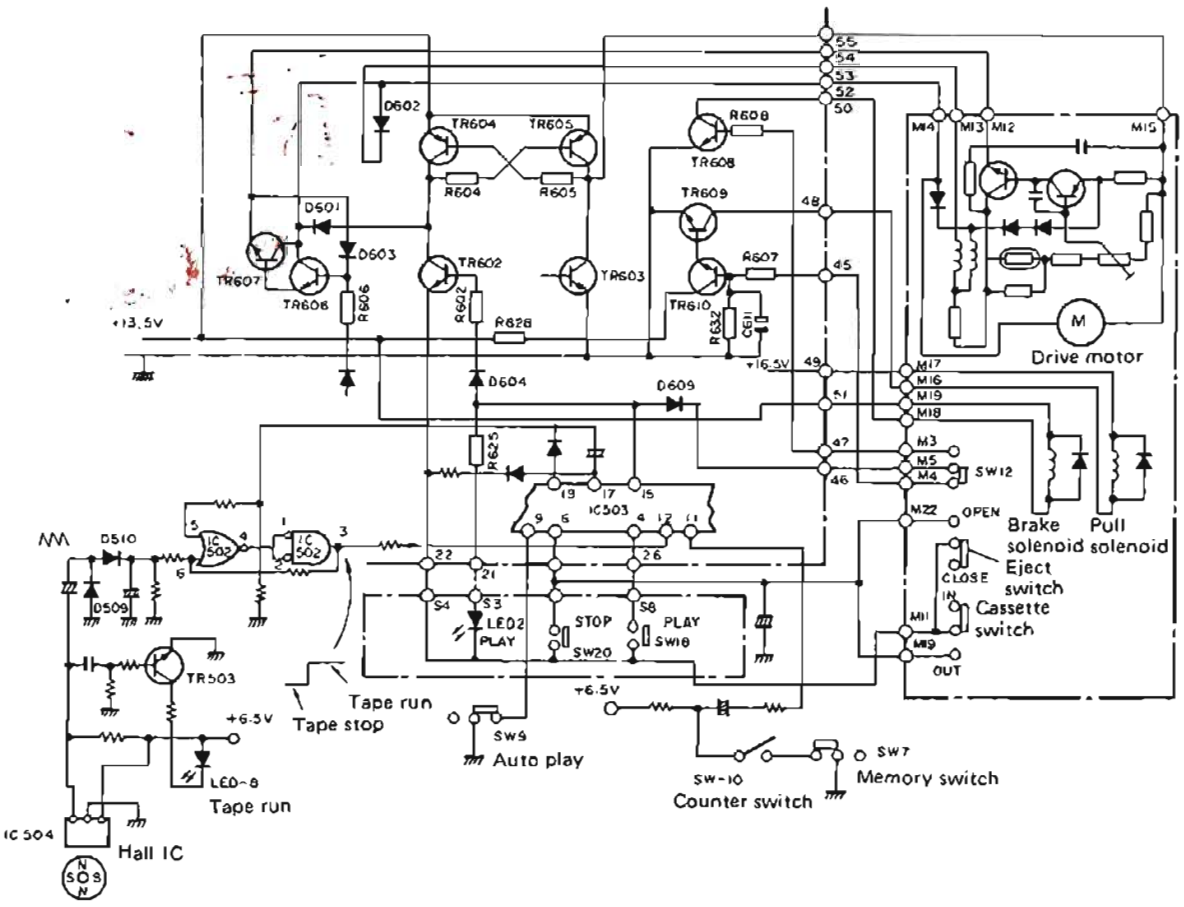

Fig. 19

9. AUTO REW (See Fig. 20.)

With AUTO REW switch turned on, pin (8) of IC503 remains at "L" level. As the tape comes to its end in PLAY mode under this condition, pin (3) of IC502 in the auto-stop circuit goes down to "L" level and, consequently, pin (15) of IC503 drops to "L" – pin (3) is connected to pin (12), which is related to pin (15) – to turn off brake solenoid and drive motor: the result is STOP mode. As the deck shifts to STOP mode in this manner, pin (21) of IC503 rises to "H" to turn on brake solenoid and drive motor: the result is REW mode automatically brought about.

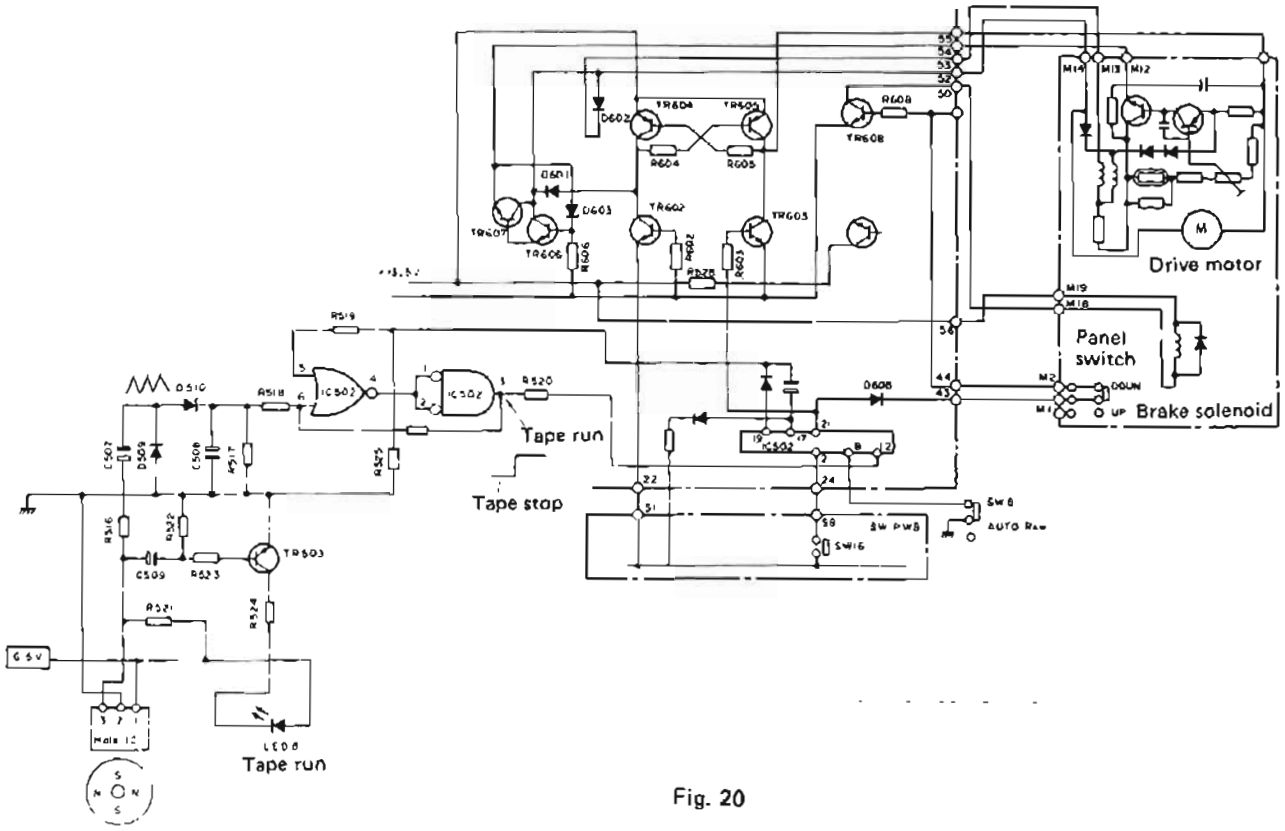

Fig. 20

10. Timer in standy condition (See Fig. 21.)

Leaving the deck unattended but ready to start recording by itself after the lapse of a preset time is a special standby mode implemented by two timer switches (SW-6-1) and (SW6-2) connected to pins (1) and (8) of IC503, as shown in Fig. 20, in which the diagram reflects REC mode. These switches are of lever type.

Note, in the diagram, that SW6-1 is a substitute for PLAY switch (SW-18) and SW6-2 for REC switch (SW-19). Since the level of pin (8) drops to GND when REC safety switch turns off, SW6-2 is set to remain at "L".

It should be noted that one end of SW6-1 is connected to the +13.5-volt source through a time-constant circuit. Upon timing out of the timer, pin (4) goes to "L" level in several seconds to set the deck in REC mode.

Leaving SW6-1 and SW6-2 in "play" position causes SW6-2 to open, so that, regardless of the level of pin (8), the deck shifts to PLAY mode.

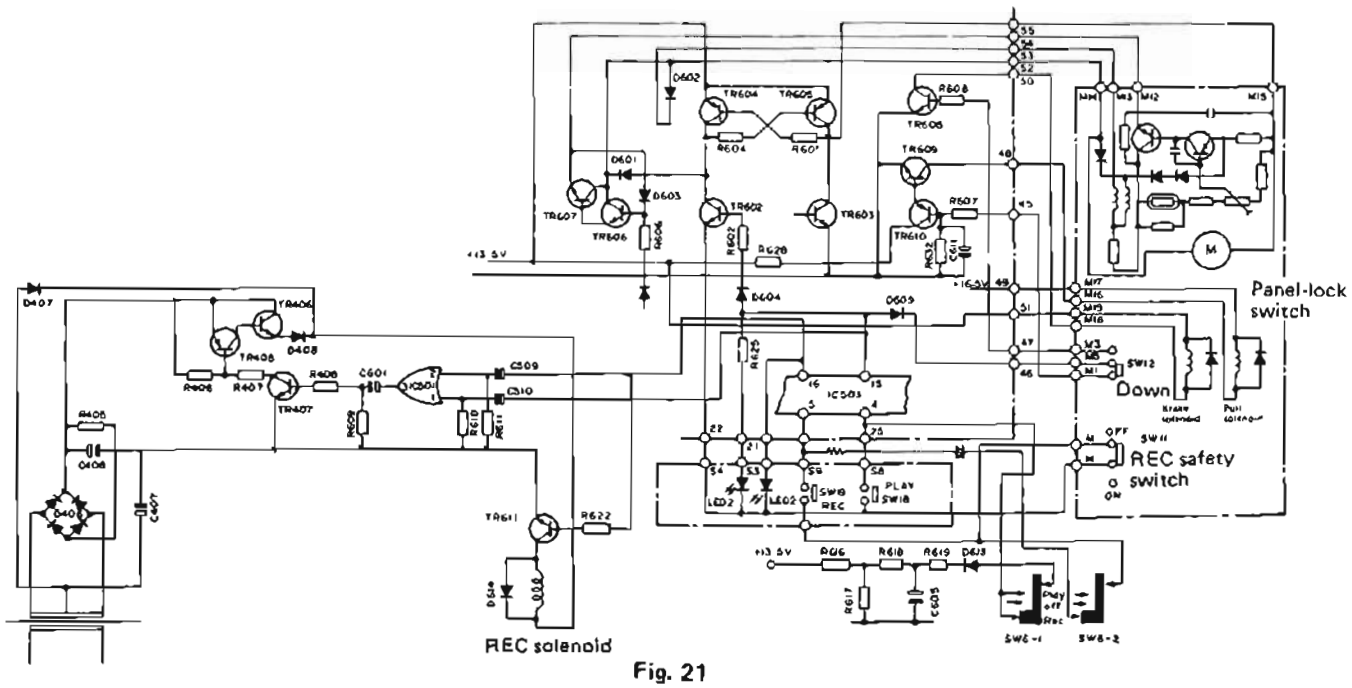

Fig. 21

TC9121P LSI FOR TAPE DECK CONTROL

The TC9121P is a C-MOS LSI for use in cassette-tape decks having feather-touch switches as means of initiating control actions and, as applied to such decks, performs many electronic functions to control the deck mechanism in a manner characteristic of advanced LSI.

1. Features

- Non-lock keys can be used for the input keys. A mechanical control action of the desired mode is accurately initiated by instantly lowering the voltage level to "L".
- Direct switching from one operating mode to another is possible. Depending on the nature of switch-over, stop mode may intervene in the switch-over but this intervention is automatic.
- Provisions are included to allow for erroneously pressing two or more input keys at the same time. Such misoperations do not foul up the function of this LSI.
- Turning on or off of power supply automatically sets the deck in stop mode.
- Timers for setting the deck in unattended recording operation can be readily implemented.
- Inputs are not limited those from keys: various control inputs can be applied for a variety of electronic control functions.
- Many output signal terminals are provided to meet a wide range of control needs for the deck mechanism.
- Each output terminal is backed by a drive-use bipolar transistor for greater current-carrying capacity to drive a motor or solenoid and to light up mode-indicating LEDs.
- Remote control is no problem.
- All input terminals are complete with built-in pullup resistors.

2. Shape

DIP 24 pins molded in plastic.

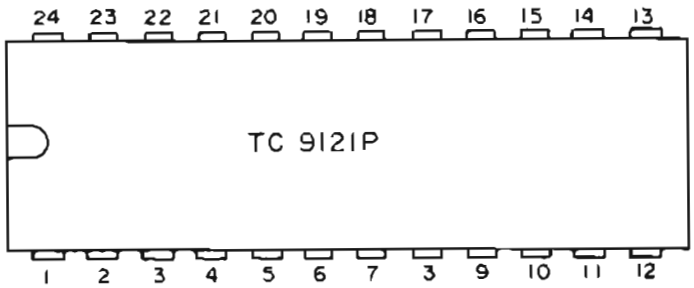

Fig. 22

3. Pin indentification

1.	GND	
2.	REW	Control-key input
3.	FF	
4.	PLAY	
5.	REC	
6.	STOP	
7.	PAUSE	
8.	A-REW	Control input except-key input
9.	A-PLAY	
10.	Y	
11.	X	
12.	Z	
13.	OSC	
14.	INH	In-put
15.	O-PLAY	Output terminals
16.	O-REC	
17.	O-STOP	
18.	O-FF-REW	
19.	O-PAUSE	
20.	MUT	
21.	REW	
22.	FF	
23.	TAPE.END	
24.	VDD	

Fig. 23

Equivalent input and output circuits

a. All inputs except Z

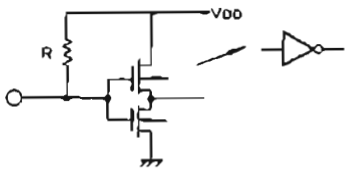

Fig. 24

b. Z input (Schmitt triggar)

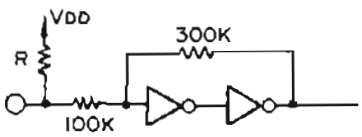

Fig. 25

c. O-MUT output

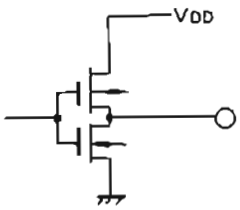

Fig. 26

d. All output pins except for O-MUT

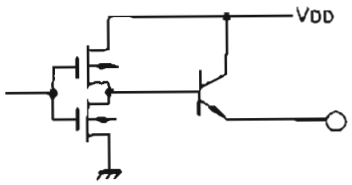

Fig. 27

4. Circuitry of TC9121P

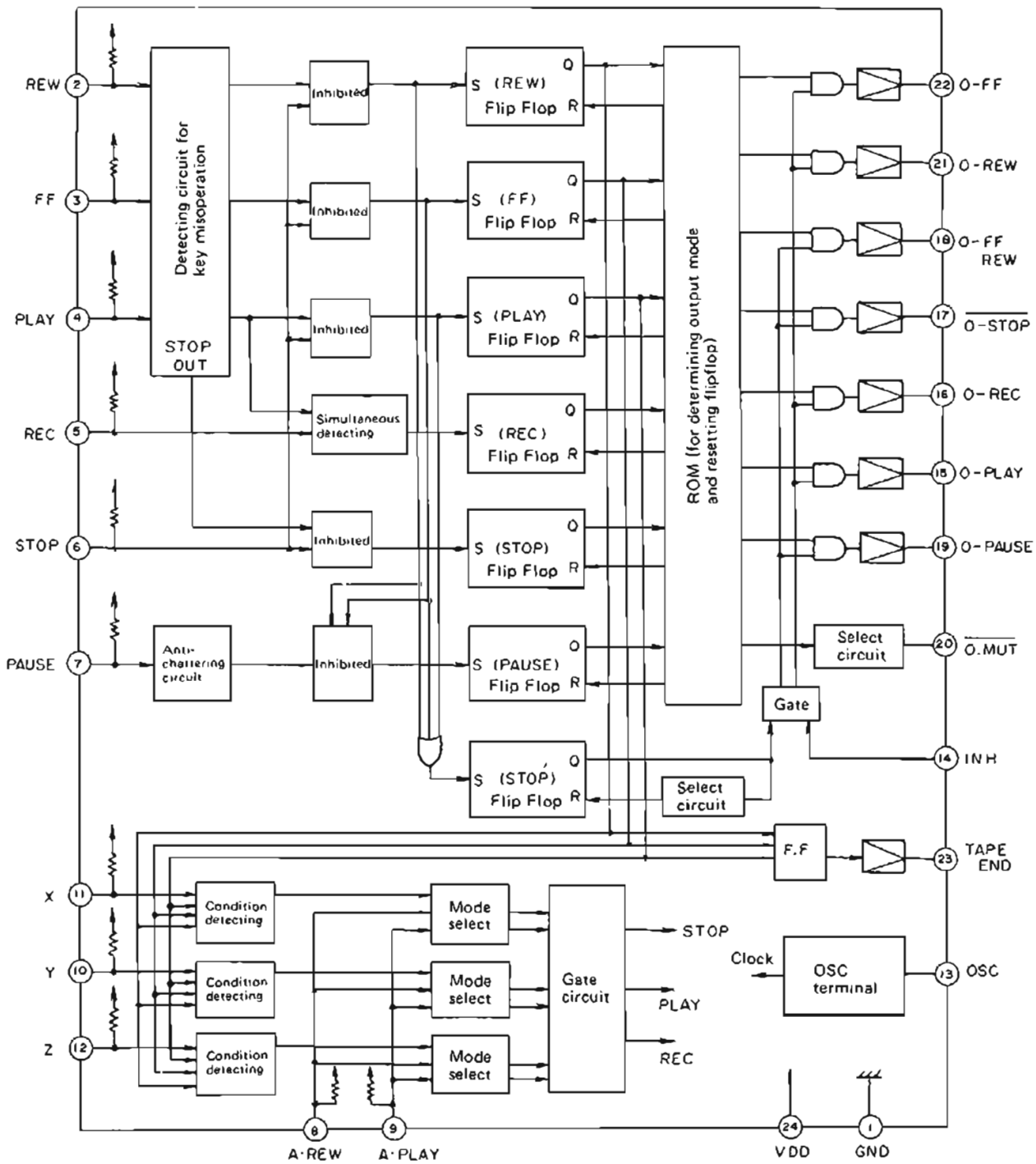

Fig. 28

5. Electrical characteristics

(1) Rating

Item	Symbol	Rating	Unit
Power supply voltage	V_{DD}	0 ~ 10	Volt (V)
Input voltage	V_{IN}	−0.3 ~ V_{DD} + 0.3	Volt (V)
Power consumption	P_C	800	Milliwatt (mW)
Operating temperature	T_{opr}	−30 ~ 75	Degree C (°C)
Storage temperature	T_{str}	−55 ~ 125	Degree C (°C)
*Output current	I_{out}	30	Milliampere (mA)

NOTE: * At output terminal of bipolar transistor.

(2) Electrical data

(V_{DD} = 5V and T_a = 25°C, unless otherwise stated)

Item	Symbol	Condition	MIN	TYP	MAX	Unit
Operating supply voltage	V_{DD}		4.5	–	10.0	V
Current consumption	I_{DD}	No-load play			1.0	mA
"L" input level	V_{IL}		0	–	1.0	V
"H" input level	V_{IH}		4.0	–	5.0	V
"H" output level	V_{OH}	20mA I_{OH} (Tr output to B_1)	3.5			V
"L"-level output leak current	I_{LL}	0-volt V_{OL} (B_1-Tr output)			10	μA
"H"-level output current	I_{OH}	V_{OH} = 4.0V (O-Hut output)	0.5			mA
"L"-level output current	I_{OL}	V_{OL} = 1.0V (O-Hut output)	0.5			mA
Pullup resistance	R_{up}		20	50	80	kΩ

NOTE: Except where supply voltage is not 5V, the values of V_{IL} and V_{IH} are determined by these equations:

$$V_{IL} = 1.0 \times \frac{V_{DD}}{5.0} \; ; V_{IH} = V_{DD} - V_{IL}$$

6. Description of operating-key inputs

(1) Functions of inputs from operating keys

Pin No.	Key	Input function
2	REW	To tell the mechanism to rewind the tape.
3	F.F	To tell the mechanism to wind the tape fast.
4	PLAY	To demand tape playback and, with REC, tape recording.
5	REC	To demand tape recording, provided that PLAY too is pressed.
6	STOP	To halt the action in progress.
7	PAUSE	To temporarily halt the tape in motion and to let the tape resume the same motion, effective for three modes: stop, playback and recording. The input is of self-setting self-resetting type.

(2) **Input priority when more than one key are pressed.**

With two or more keys in pressed-down condition, a certain input has priority over the other(s) to induce the output mode listed in this chart. As the pressed-down keys are released one after another, the last pressed-down key becomes effective and sets the mode until it is released.

Fist input	Other keys pressed down	Resultant mode
STOP	REW, F.F, PLAY, REC, PAUSE	Stop
F.F	REW, PLAY	Stop
	REC, PAUSE	Fast forward
REW	F.F, PLAY	Stop
	REC, PAUSE	Rewind
PLAY	PAUSE	Playback pause
	PLAY	Recording
REC	PAUSE	Pause
	PLAY and PAUSE	Recording pause

(3) **Effect of pressing operating keys on current mode**

Mode in Progress	Key inputs					
	STOP	F.F	REW	PLAY	PAUSE	REC/PLAY
Stop	–	* Fast forward	* Rewind	* Playback	Pause	* Record
Fast forward	Stop	–	* Rewind	* Playback	–	* Record
Rewind	Stop	* Fast forward	–	* Playback	–	* Record
Playback	Stop	* Fast forward	* Rewind	–	Playback pause	* Record
Pause	Stop	Fast forward	Rewind	Playback	Stop	Record pause
Record	Stop	* Fast forward	* Rewind	–	Record pause	–
Record pause	Stop	Fast forward	Rewind	–	Record	–
Playback pause	Stop	Fast forward	Rewind	–	Playback	Record pause

NOTES: 1) * Change to the indicated mode is executed with a 0.5-second delay (stop time).
(The change not marked with * is instantaneous, involving no delay.)

2) "–" means that the mode in progress remains unchanged.

7. Description of control inputs (as distinguished from those from operating keys)

(1) Functions of control inputs for LC1

Pin No.	Input designation	Function
8	A.REW	This input selects the mode when the input to Y or Z changes to "L" during playback or recording operation. With A.REW set at "H" level . . . . . Change of Y or Z to "L" results in STOP. With A.REW set at "L" level . . . . . Change of Y or Z to "L" results in STOP, followed automatically by REWIND. NOTE: When Z changes to "L" curing FAST FORWARD, STOP is induced automatically regardless of the state of A. REW.
9	A.PLAY	This input selects the mode when Y or Z input changes to "L" during REWIND. With A.PLAY set at "H" level . . . . Change of Y or Z to "L" results in STOP. With A.PLAY set at "L" level . . . . Change of Y or Z to "L" results in STOP, followed automatically by REWIND.
10	X	This input selects STOP or PLAY, depending on the setting of A.PLAY, when REWIND is in progress. It is used to halt or initiate PLAY at a desired position when the tape is being rewound, by means of a counter with memory. This input has no effect unless the current mode is REWIND.
11	Y	This input selects STOP or REWIND, depending on the setting of A.REW, when playback or recording is in progress. By connecting a counter with memory, it is possible to halt or start rewinding the tape at any desired position. This input has no effect unless the current mode is PLAY or RECORD.
12	Z	The signal resulting from detection of the halting of the tape comes to input terminal Z: the input signal is in the form of "L"-level pulse. When the tape is moving, it remains at "H". The mode to follow the end of the tape is selected by this input together with A.REW and A.PLAY.

(2) Modes selected by control inputs, X, Y and Z, together with A.PLAY and A.REW.

Input and condition / Present operation mode	X input		Y input		Z input	
	A.PLAY H	A.PLAY L	A.REW H	A.REW L	A.PLAY A.REW H	A.PLAY A.REW L
STOP	–	–	–	–	–	–
FAST FORWARD →	–	–	–	–	Stop	Stop
REWIND →	Stop	Play	–	–	*Stop	*Play
PLAY →	–	–	Stop	Rewind	Stop	Rewind
RECORD →	–	–	Stop	Rewind	Stop	Rewind
PAUSE	–	–	–	–	–	–

NOTES: 1) The dash – means that the on-going mode remains unchanged even when a "L"-level X, Y or Z input is received.

2) * Determined by A.PLAY: all other modes in the Z input column are determined by A.REW.

(3) Example of producing Z signal

Z signal is a two-level signal staying at "H" or "L" according as the tape is "running" or "standstill". There are a number of ways to produce this signal on the basis of a rotary body. This circuit is an example of detecting rotation to produce the Z signal:

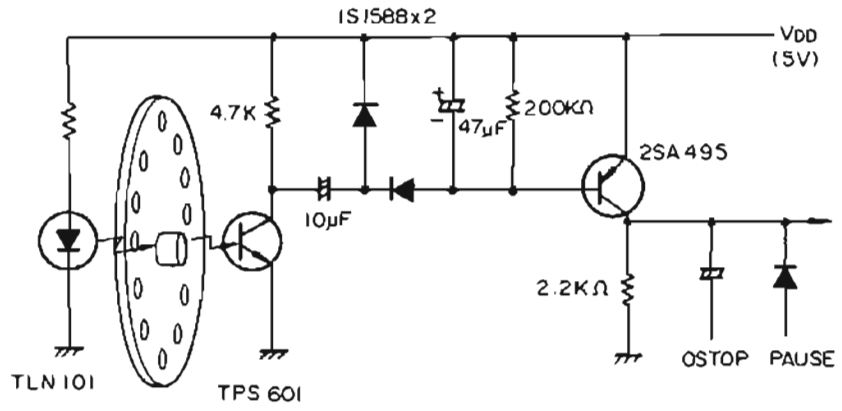

(4) Example of operations initiated by control inputs (A.REW, A.PLAY, X, Y, Z)

NOTES: 1) In the following chart, three symbols are used:
- o Tape start position
- ▶ Tape stop position
- ⏚ Automatic mode change

2) A.REW and A.PLAY initiate actions (⏚) by going to "L" level.

3) For "ON" of X and Y, connection is to be made to a memory-type counter, there being no connection for "OFF".

A-REW	A-PLAY	X	Y
H	H	OFF	OFF
L	H	OFF	OFF
H	L	OFF	OFF
L	L	OFF	OFF
H	H	ON	OFF
H	L	ON	OFF
L	L	ON	OFF
H	H	OFF	ON
L	L	OFF	ON
L	L	ON	ON

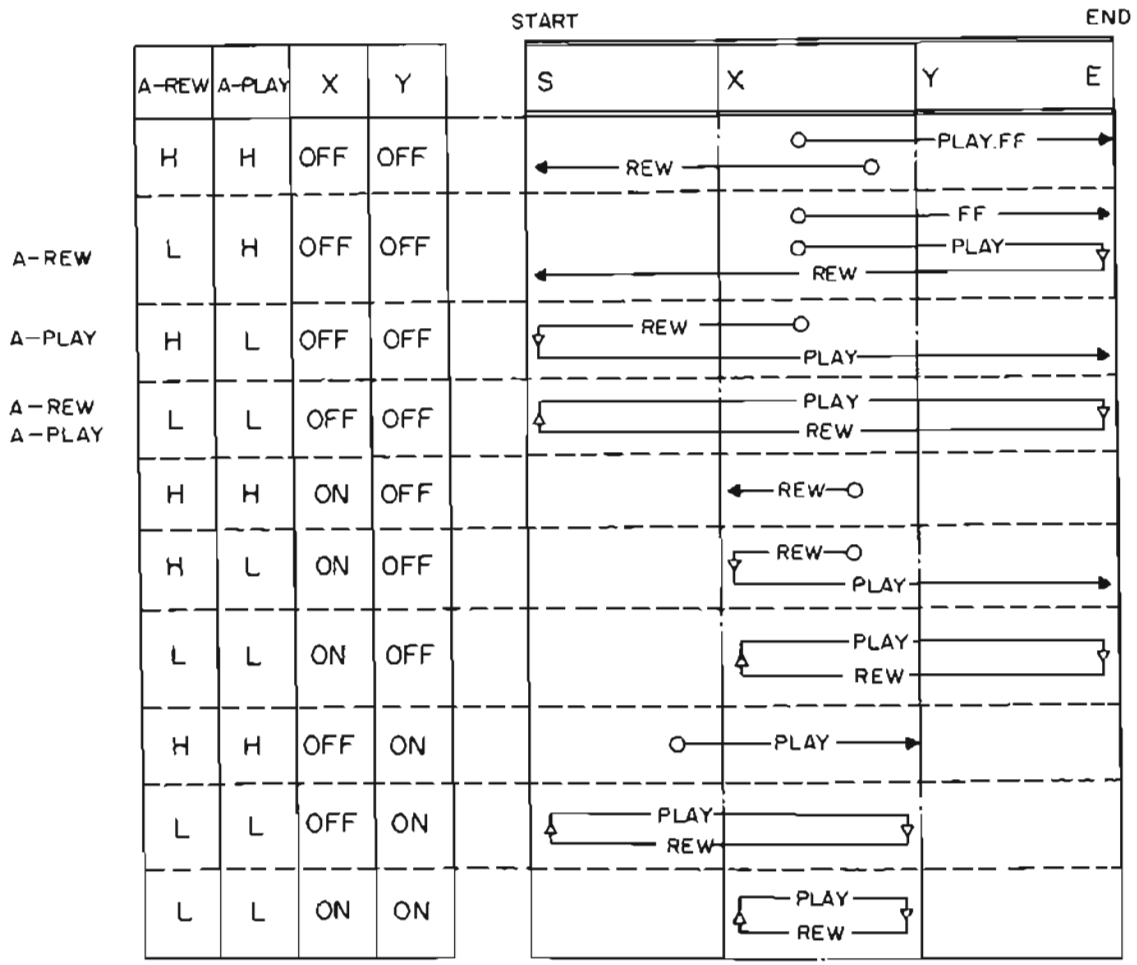

8. Description of outputs

(1) Signal level at output terminals

Pin No.	Signal	Description
15	O-PLAY	Output level is "H" for play or recording mode.
16	O-REC	Output level is "H" for recording or recording-pause mode.
17	$\overline{\text{O-STOP}}$	"H" level for all modes except for stop mode.
18	O-OFF.REW	"H" level for F.F. or rewind mode.
19	O-PAUSE	"H" for pause mode.
20	$\overline{\text{O-MUT}}$	"L" level for play, recording and pause modes, and "H" level for all other modes.
21	O-REW	"H" level for rewind mode.
22	O-OFF	"H" level for F.F.
23	TAPE.END	Normally "H" output comes out of this terminal. As the end of tape motion is detected by means of Z input, the level goes to "L" but, if one of the keys is operated or if A.REW or A.PLAY input becomes effective, it reverts to "H".

(2) Correspondence between outputs and key inputs

NOTE: ○ means that output level changes to "H".

Key inputs / Output terminal	STOP	F.F.	FEW	PLAY	REC/PLAY	Pause		
						STOP →	PLAY →	REC/PLAY →
O-PLAY				○	○			
O-REC					○			○
O-STOP		○	○	○	○	○	○	○
O-FF.REW		○	○					
O-PAUSE						○	○	○
O-MUT	○	○	○			○		
O-REW			○					
O-F.F.		○						
TAPE.END	○	○	○	○	○	○	○	○

(3) Timing relation between outputs and key inputs

In order to protect the tape and deck mechanism, a halt duration of about 0.5 sec is provided in the process of "direct switch-over" from one mode to another. In other words, the 0.5-sec halt intervenes automatically. The circuitry of this LSI is arranged to produce that delay. Where this halt occurs will be seen in the following example:

Example 1: Output timing for PLAY key pressed during rewinding

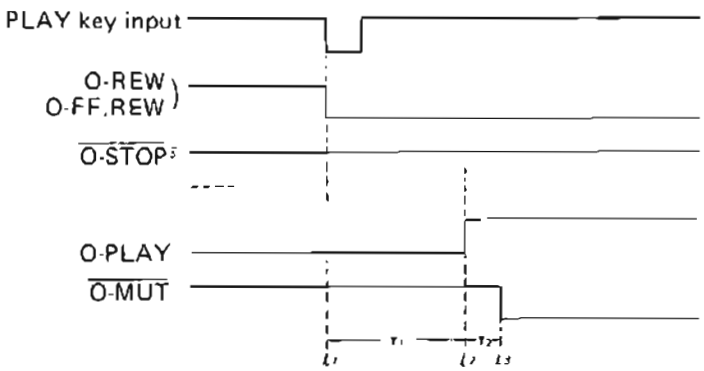

Reference is made to the above timing diagram in the following explanatory notes:

a) Pressing PLAY key during rewinding changes O-REW and O-FF.REW instantly to "L" level and, after a lapse of T_1 (about 0.4 sec), O-PLAY changes to "H". Then, about 0.1 sec later (T_2), $\overline{\text{O-MUT}}$ falls to "L" to relieve the amplifier from muted condition. The values of T_1 and T_2 can be changed as desired by properly sizing the C and R external to the oscillator terminal, of which mention will be made later.

b) $\overline{\text{O-STOP}}$ goes to "L" for stop mode but the halt (stop) period occurring as above does not force it to go to "L": it remains at "H" as shown.

c) There is some delay in signal rise for some outputs; the other output signals exhibit an instant rise. The delayed-rise outputs are as follows:
O-PLAY; O-REC; O-REW; O-FF; and $\overline{\text{O-MUT}}$

d) Pressing PAUSE key to release the pause (recording pause, play pause, etc.) causes outputs to change instantly.

(4) How to use outputs

The outputs can be made use of in several ways and should be so used as to suit the deck mechanism to be served by the LSI. The basic scheme of using the outputs will be explained here.

a) Current-carrying capacity of output terminals
All output terminals except for that of $\overline{\text{O-MUT}}$ are backed by bipolar transistors and deliver an open-emitter output, so that each is capable of passing up to 20 mA for "H" level, a value large enough to drive a motor, solenoid or drive transistor directly. This capability reduces the number of needed parts in deck. LEDs used as indicating lamps, too, can be directly energized.

b) Correspondence between outputs and deck mechanism (example)

Pin No.	Output	Mechanism component served	
15	O-PLAY	PLAY solenoid and PLAY pilot lamp.	
16	O-REC	RECORD solenoid and RECORD pilot lamp	
17	$\overline{\text{O-STOP}}$	HOLDER solenoid	
18	O-FF.REW	BRAKE solenoid	
19	O-PAUSE	PAUSE pilot lamp	
20	$\overline{\text{O-MUT}}$	Amplifier muting circuit	
21	O-REW	REEL motor	Fast-forward pilot lamp
22	O-FF		Rewind pilot lamp
23	O-TAPE END	CAPSTAN motor	

NOTE: If O-TAPE END is used to drive the capstan motor, turning on power supply to the deck sets the motor in operation, and the tape runs to the end in such a mode as FF.REW and PLAY: the motor will stop running as the mechanism comes automatically to a halt. The motor will start running when a control key is pressed again for action.

9. Description of non-output functions

(1) OSC and INH ternimals

Pin No.	Terminal	Function
13	OSC	The C and R elements for determining the frequency of the single-terminal oscillator are to be connected to this terminal. Clock pulses produced by this oscillator are used to time various circuit actions inside the LSI and are applied to an anti-chattering circuit and the like.
14	$\overline{\text{INH}}$	In all modes, holding the potential of this terminal at „L" level shuts off all outputs except for $\overline{\text{O-MUT}}$ and TAPE END, turning the mechanism into stop state. This feature may be utilized for protection of the mechanism and tape at the time of turning off power supply to the deck or for providing a warm-up time preceding the unattended, self-initiated recording operation to start upon timing out of the timer.

(2) How to size the C and R for OSC terminal

a) Let T stand for the period in the oscillation, whose frequency is 1/T. The circuitry of this LSI is such that the time delays T_1 and T_2 [indicated in the timing diagram of 9. (3), above] are multiples of period T:

$T_1 = T \times 4$, and $T_2 = T$

Thus, determining the value of T determines the values of T_1 and T_2. If T = 100 milliseconds, the frequency of oscillation, f_{osc}, is 10 Hz, and T_1 = 0.4 sec and T_2 = 0.1 sec.

b) The values of the C and R for obtaining the frequency of 10 Hz is, in the present LSI, are 1 microfarad and 75 kilohms: these are standard values. Since some deviation from the standard must be anticipated in the individual LSIs, it is advisable that a 75-kilohm semi-fixed resistor should be used for the R. With such a resistor, resistance can be adjusted to secure exact 10 Hz for T = 0.1 sec.

(3) How to utilize power on-off actions

a) Automatically bringing the deck into initial state by turning on power supply.

By "intital state" is meant STOP mode. In order to force the deck into this mode when its power switch is turned on, a capacitor must be added.

Locate the capacitor between STOP input terminal and GND terminal. As the power switch is turned on, the voltage in the deck's power source will instantly rise but, since the capacitor gets charged through the internal pullup resistor, voltage at the STOP terminal will rise gradually. This delay or time lag produces the same effect as if STOP key were pressed (to set the deck in STOP mode).

The capacitive size of the capacitor must be determined experimentally to suit the rise time characteristic of the deck's power source.

b) Automatically bringing the deck into PLAY or RECORD mode by turning on power supply

This automatic setting is desired where a timer is added to the deck to start playing or recording upon timing out of the timer. In this case, too, a capacitor is needed for each of input terminals, PLAY and RECORD.

The circuit diagram, below, illustrates the locations of the capacitors associated with the timer switches. Note that C_2 is for PLAY and C_3 is for REC. The capacitor mentioned above for STOP is left in place. The requirement here is that the capacitive values of C_2 and C_3 be smaller than that of C_1. The capacitor C_1 may be disconnected or be left in the condition shown in the diagram.

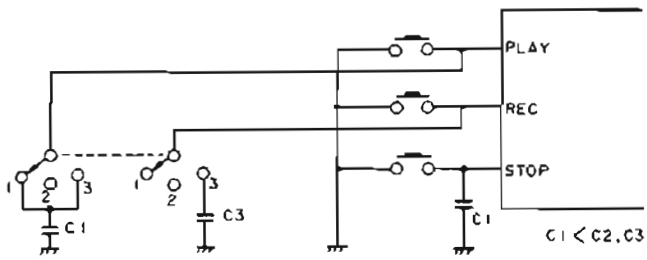

c) Providing a deck warming-up time for timed starting
Where a timer is included in the deck as explained above, a warm-up duration can be provided automatically by taking advantage of INH (inhibit) terminal in order to allow for the warm-up delay of internal and external circuits at each timed starting in PLAY, RECORD, etc. Actually, the starting of a mode can be held up as much as several seconds. How to implement such a starting delay is illustrated in the diagram to follow.
It was stated earlier that two-level voltage, "H" or "L", is to be applied to INH terminal and that, with "L" level, all outputs except for $\overline{\text{O-MUT}}$ and TAPE END become inhibited regardless of the on-going mode in the LSI to hold it in STOP mode. When the voltage changes to "H", the LSI resumes the previous mode and delivers outputs.
A starting delay of the desired duration can be introduced into this inhibiting action by connecting a time-constant circuit, consisting of C and R, to INH terminal, as shown.

d) Instant stopping by turning off of power supply
INH terminal can be utilized in another way to instantly force the deck into STOP mode, automatically, upon turning off power supply regardless of the on-going mode. This is accomplished by using a capacitor (indicated as C_2 in the diagram below) to drive the voltage of INH terminal to "L" level by capacitor discharging.
There are two ways to form a discharging circuit. One is as shown in the diagram and consists of C_2 and D_1; the other is to use a mechanical switch linked to the power on-off switch. In either case, the capacitor must be such as to release its charge quickly.

Examples of utilizing INH terminal

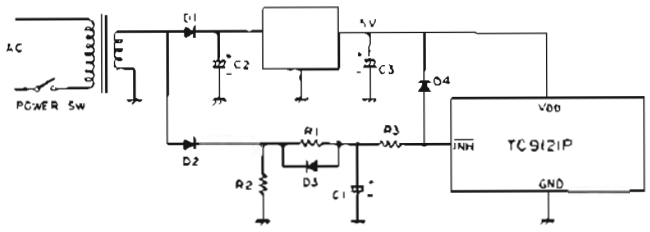

NOTES:
1) The duration of warming up is determined by R_1 and C_1. The threshold voltage for INH terminal is approximately half the V_{DD}.
2) R_3 and D_4 are for protection of this LSI, and prevents any excessively high voltage from applying to INH terminal.
3) The time constant for discharging is determined by C_1 and R_2. The smaller the resistance of R_2, the quicker the discharge.

Voltage variations at V_{DD} and INH terminals

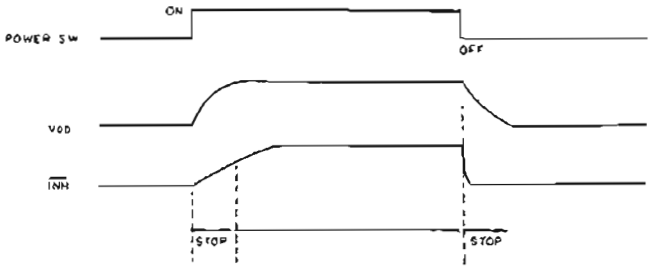

(4) **How to provide control functions external to TC9121P**
How to defeat all key inputs when the deck is not loaded with a cassette tape; to prevent a pre-recorded tape from getting accidentally erased; to alter key functions temporarily to suit a special operating condition, and to accommodate remote control for the deck — these control functions can be readily implemented where this LSI is applied. In the following explanation, it will be seen that many other functions too are possible.

a) How to defeat all key inputs (in the absence of the tape)
A switch, designed to close when the cassette tape is inserted and set in place, is needed in the deck. Connect this switch in the manner illustrated here:

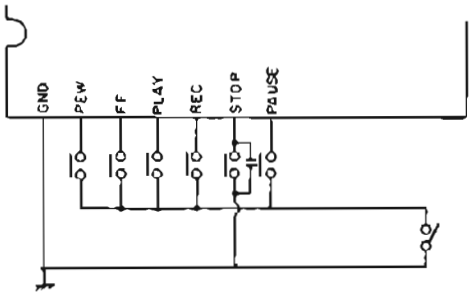

Note that the switch, named "cassette switch," is located between ground on the one side and the key switches on the other. As you take out the cassette, the cassette switch opens to render all keys (with the exception of STOP key) ineffective: pressing them do not lower the input level to "L". The reason why STOP key is excluded from this arrangement and kept effective is too obvious.
Capacitors C_1 and C_2, suggested in the examples of utilizing INH terminal, above, with respect to the timer to be added, must be grounded through the cassette switch coming on their ground side.

b) How to prevent a recorded tape from getting erased
It will be recalled that each brand-new cassette tape has an anti-erasure pin or finger sticking out from its case: by breaking off this pin, the tape can be made to refuse recording and be amenable only to playback. The pin, if left intact, actuates a microswitch to subject the tape to recording or playing, whichever is desired.

In the tape deck, to which this LSI is to be applied, such a microswitch is required as in any cassette tape recorder. Connect the microswitch in series to REC key as shown in this diagram:

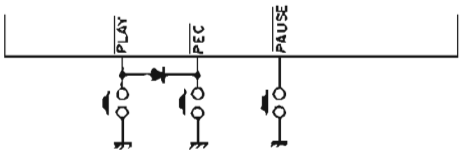

c) How to alter key functions temporarily

Let's take up REC key for example. Input from this key is effective only when PLAY key is pressed at the same time. It may be desired in some instances that the deck goes into operation in REC mode when REC key alone is pressed. This can be accomplished by inserting a diode between PLAY key and REC key, as shown.

With the diode so connected, pressing PLAY key drives PLAY input to "L" but not REC input. Pressing REC key, however, drives both inputs, PLAY and REC, to "L" to achieve the desired end.

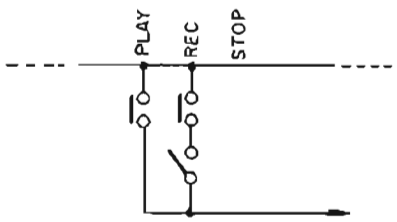

The function so added may be designated "REC/PLAY." In the same sense, "REC/PAUSE" function can be obtained by adding a diode.

d) How to provided remote control

One of the outstanding advantages of the electronic control with the TC9121P is that remote control over the deck can be realized with the use of a simple switching means external to the deck. All you have to use are duplicates of the deck's operating keys: provide the duplicate keys in the remote controller (switch box) and electrically parallel each duplicate key to its counterpart key on the deck.

TRANSISTOR & IC BASE CONNECTION

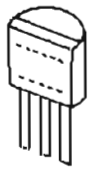 E C B	2SA-733, 2SC-945, 2SC-900 2SA-991, 2SC1844, 2SC2002	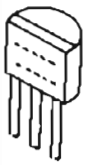 B C E	2SA-906G (2SA-991 or), 2SB-525, 2SD-355
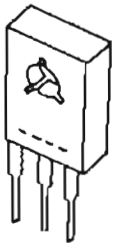 E C B	2SD-794	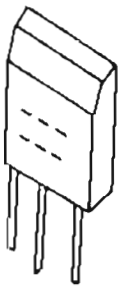 E C B	2SD-571

TC9121

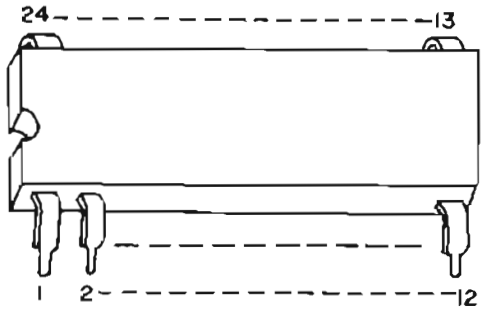

Pin No.	Jacks Name		Pin No.	Jacks Name	
1	GND		13	OSC	
2	REW	IN	14	INH	IN
3	F.F.	IN	15	0-PLAY	OUT
4	PLAY	IN	16	0-REC	OUT
5	REC	IN	17	$\overline{\text{0-STOP}}$	OUT
6	STOP	IN	18	0-F.F.-REW	OUT
7	PAUSE	IN	19	0-PAUSE	OUT
8	A. REW	IN	20	0-MUT	OUT
9	A. PLAY	IN	21	0-REW	OUT
10	Y	IN	22	0-F.F.	OUT
11	X	IN	23	0-TAPE-END	OUT
12	Z	IN	24	V_{DD}	

NE645B

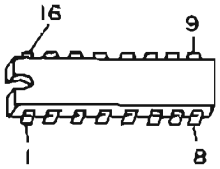

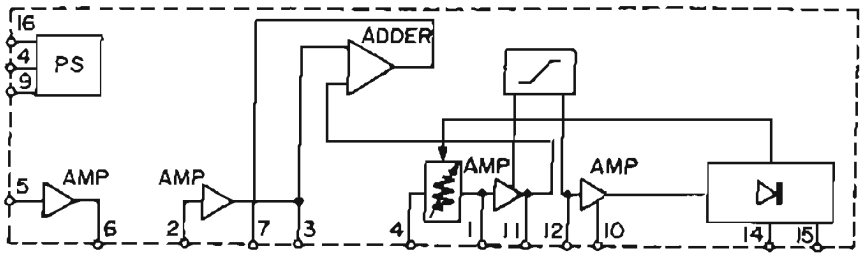

[CMOS]
μPD4001C

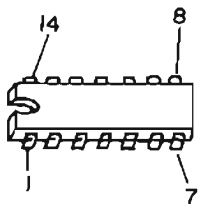

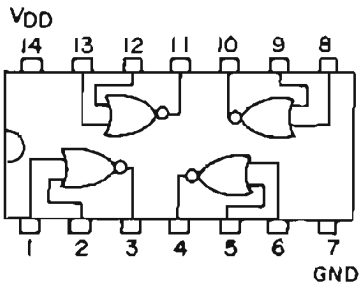

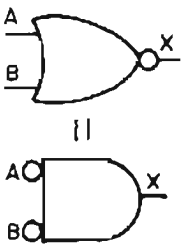

A	B	X
L	L	H
L	H	L
H	L	L
H	H	L

[CMOS]
μPD4071C

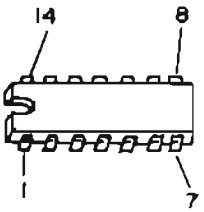

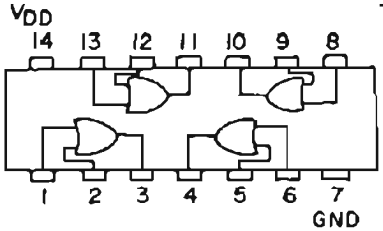

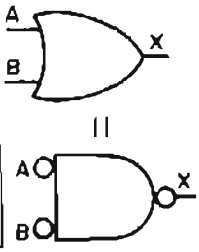

A	B	X
L	L	L
L	H	H
H	L	H
H	H	H

DN6838

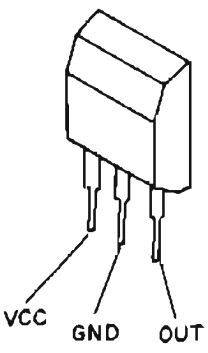

MAIN PWB ASS'Y Component Side

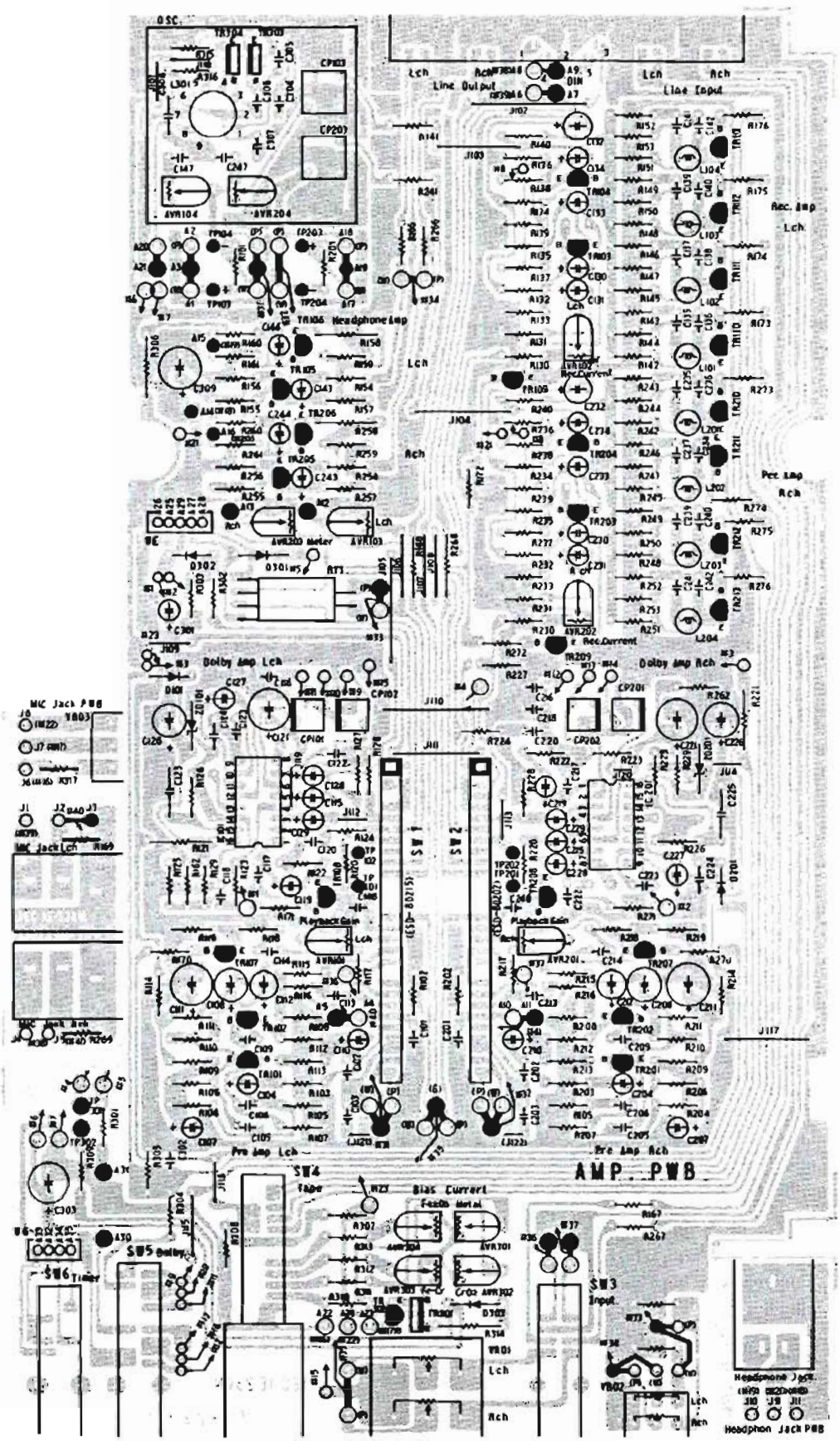

MAIN PWB ASS'Y Solder Side

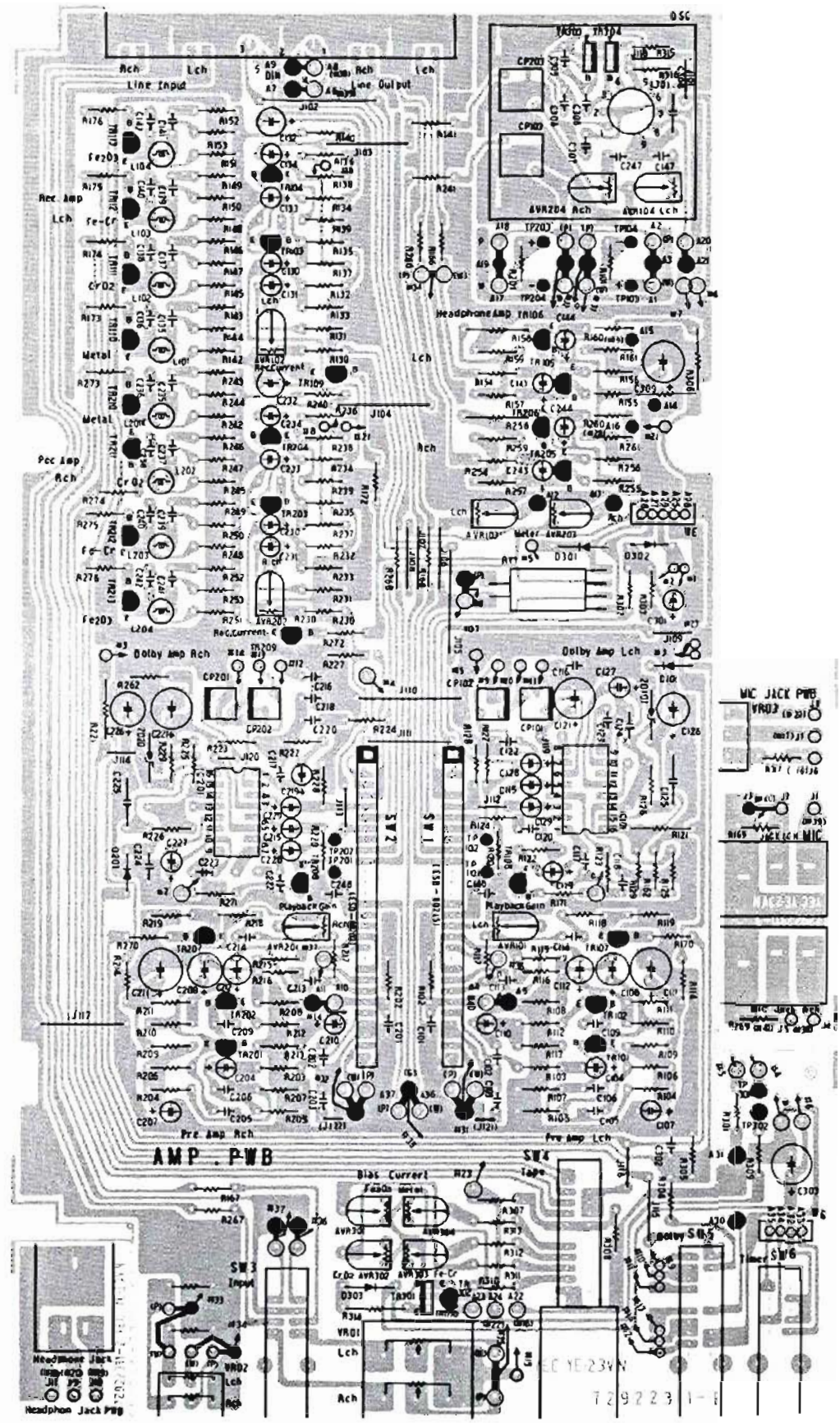

SWITCH PWB ASS'Y (A)
Component Side

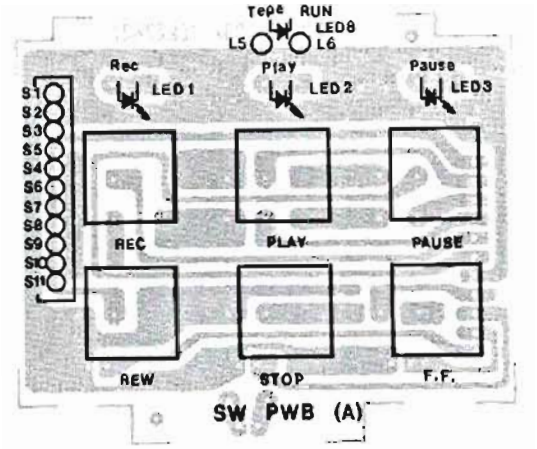

SWITCH PWB ASS'Y (A)
Solder Side

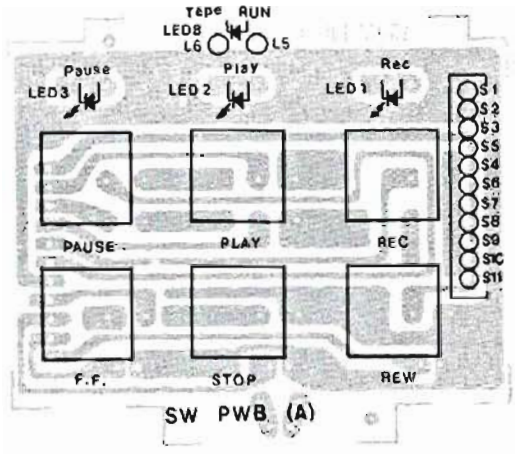

SWITCH PWB ASS'Y (B)
Component Side

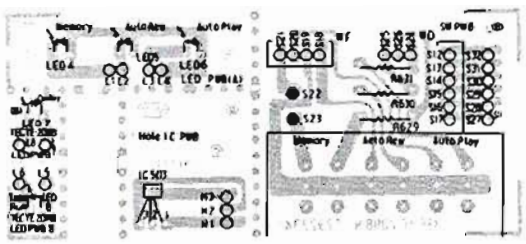

SWITCH PWB ASS'Y (B)
Solder Side

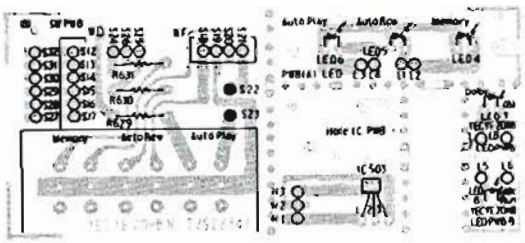

FUSE PWB ASS'Y
Component Side

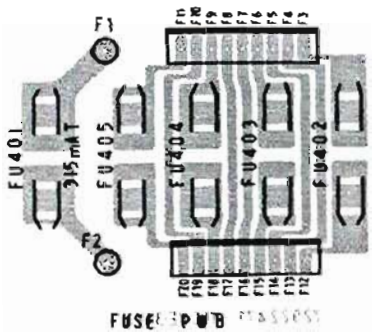

FUSE PWB ASS'Y
Solder Side

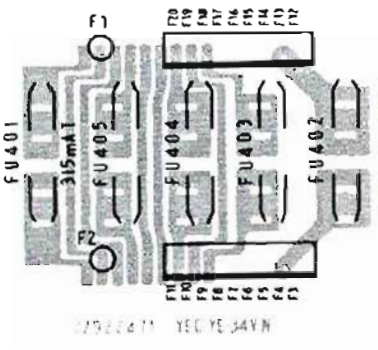

CONTROL PWB ASS'Y
Component Side

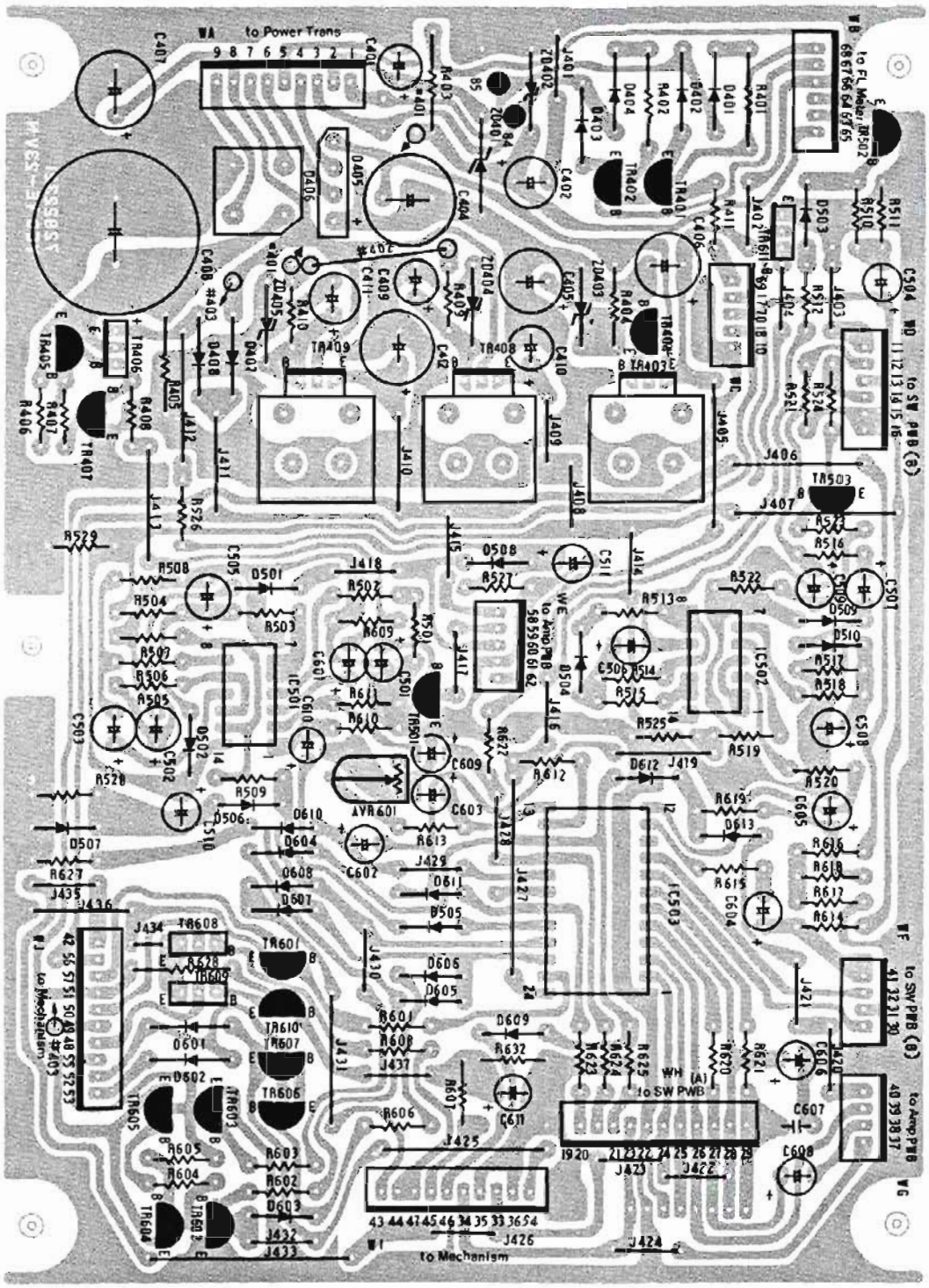

CONTROL PWB ASS'Y
Solder Side

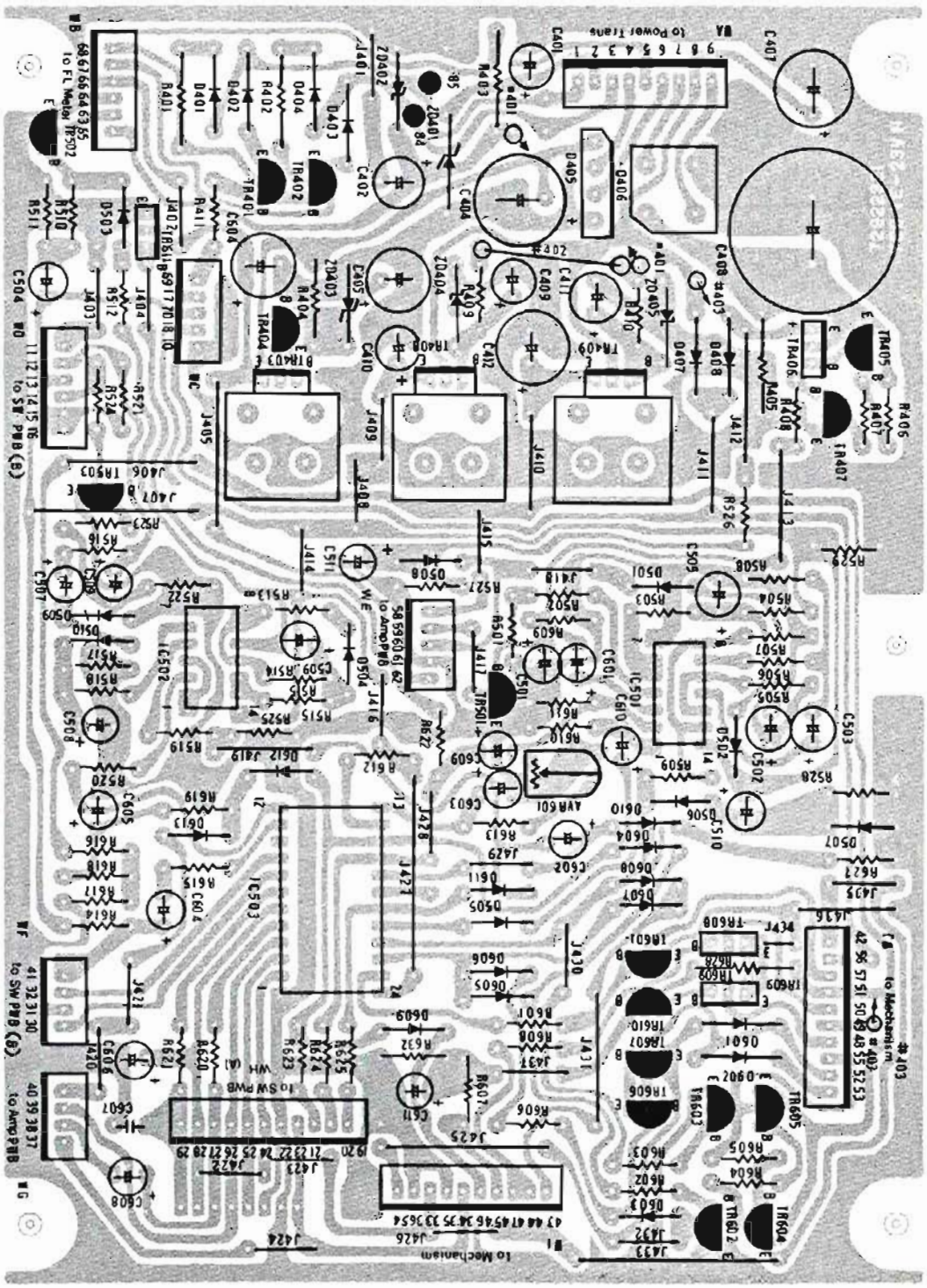

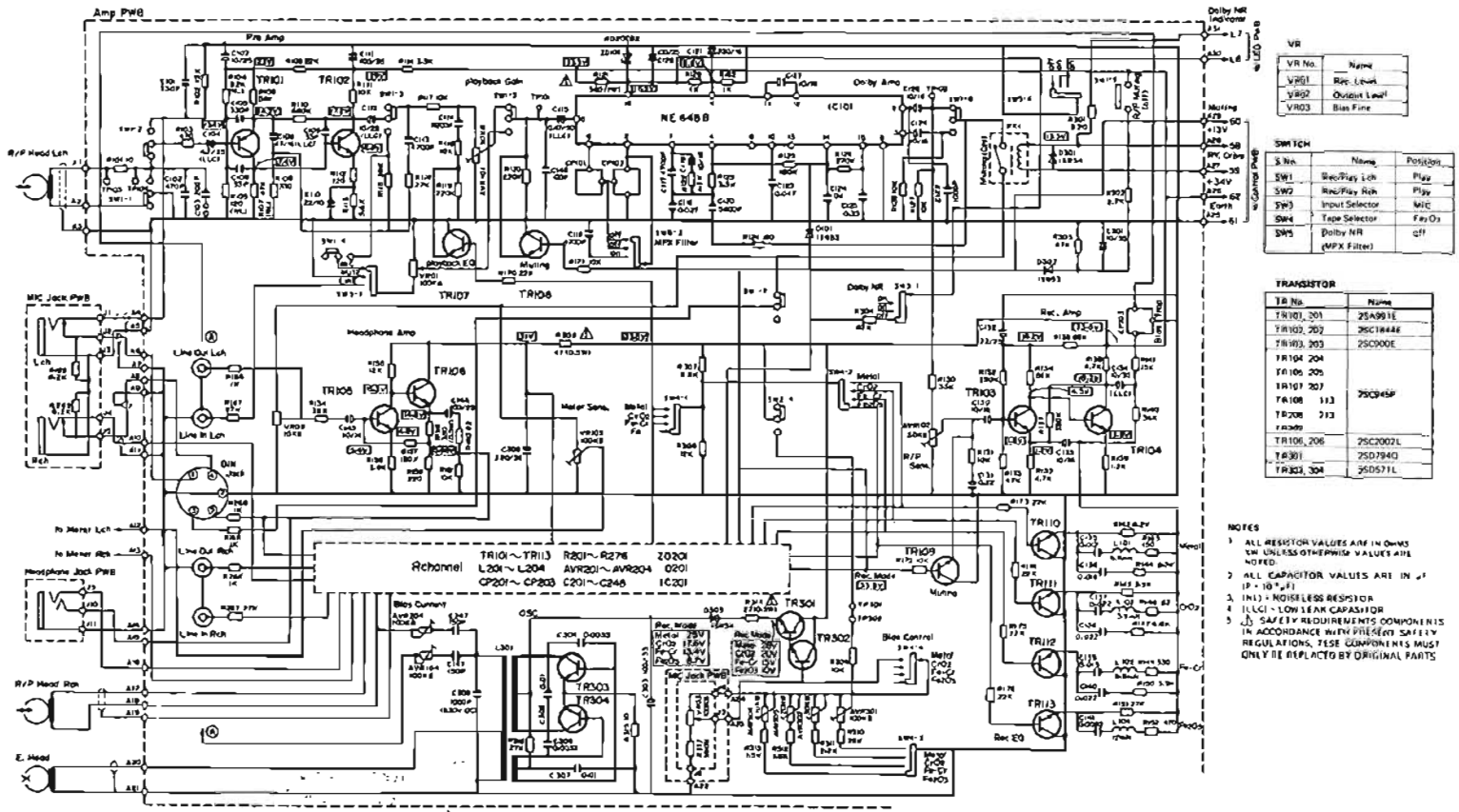

VR

VR No.	Name
VR01	Rec. Level
VR02	Output Level
VR03	Bias Fine

SWITCH

S No.	Name	Position
SW1	Rec/Play Lch	Play
SW2	Rec/Play Rch	Play
SW3	Input Selector	MIC
SW4	Tape Selector	Fe-Cr
SW5	Dolby NR (MPX Filter)	off

TRANSISTOR

TR No.	Name
TR101, 201	2SA933E
TR102, 202	2SC1844E
TR103, 203	2SC900E
TR104, 204 TR105, 205 TR107, 207 TR108, 113 TR208, 213	2SC945P
TR106, 206	2SC2002L
TR301	2SD794Q
TR303, 304	2SD571L

NOTES

1. ALL RESISTOR VALUES ARE IN Ohms (Ω) UNLESS OTHERWISE VALUES ARE NOTED.
2. ALL CAPACITOR VALUES ARE IN μF (P = 10⁻⁶ μF)
3. (NL) = NOISELESS RESISTOR
4. (LLC) = LOW LEAK CAPASITOR
5. ⚠ SAFETY REQUIREMENTS COMPONENTS IN ACCORDANCE WITH PRESENT SAFETY REGULATIONS, THESE COMPONENTS MUST ONLY BE REPLACED BY ORIGINAL PARTS

SCHEMATIC DIAGRAM (Amplifier Stage)

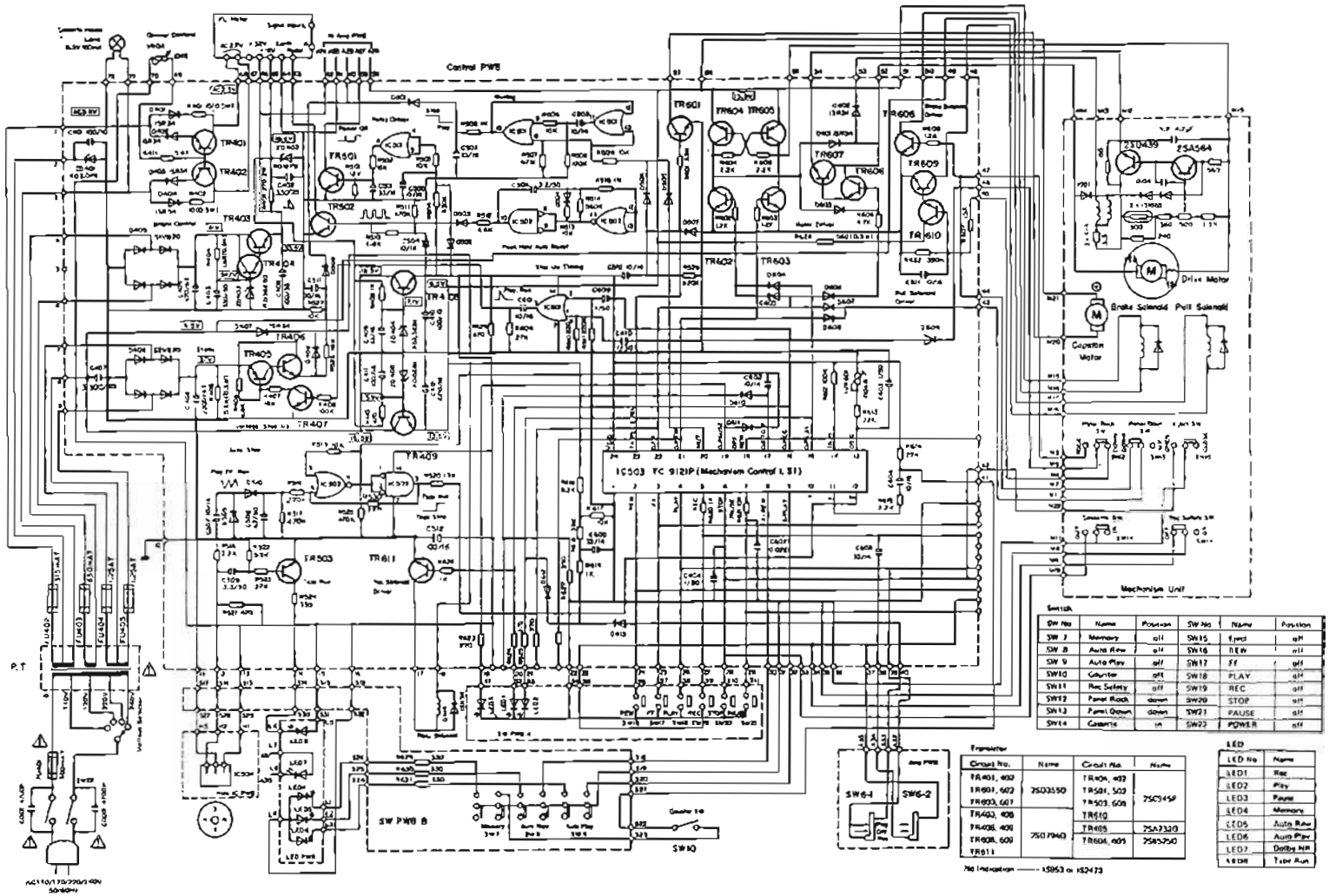

SW No	Name	Position	SW No	Name	Position
SW 7	Memory	off	SW15	Eject	off
SW 8	Auto Rew	off	SW16	REW	off
SW 9	Auto Play	off	SW17	FF	off
SW10	Counter	off	SW18	PLAY	off
SW11	Rec Safety	off	SW19	REC	off
SW12	Panel Rock	down	SW20	STOP	off
SW13	Panel Open	down	SW21	PAUSE	off
SW14	Cassette	in	SW22	POWER	off

Circuit No.	Name	Circuit No.	Name
TR401, 402	2SD355D	TR404, 405	2SC945P
TR601, 602		TR501, 502	
TR603, 607		TR503, 609	
TR403, 406	2SD794Q	TR610	2SA733D
TR408, 409		TR405	
TR608, 609		TR606, 605	2SC2750
TR611			

LED No	Name
LED1	Rec
LED2	Play
LED3	Pause
LED4	Memory
LED5	Auto Rew
LED6	Auto Play
LED7	Dolby NR
LED8	Tape Run

SIGNAL FLOW CHART FOR PLAYBACK MODE

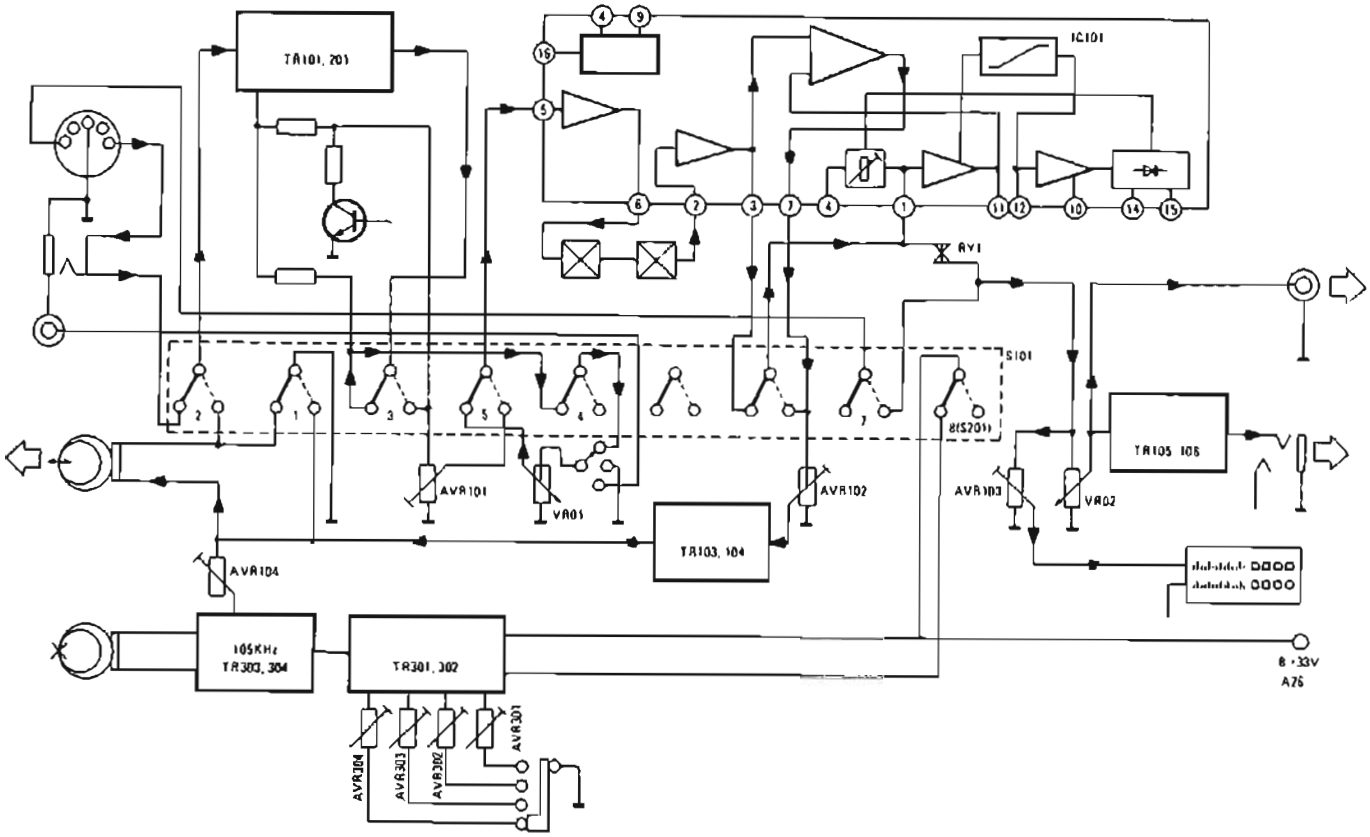

SIGNAL FLOW CHART FOR RECORD MODE

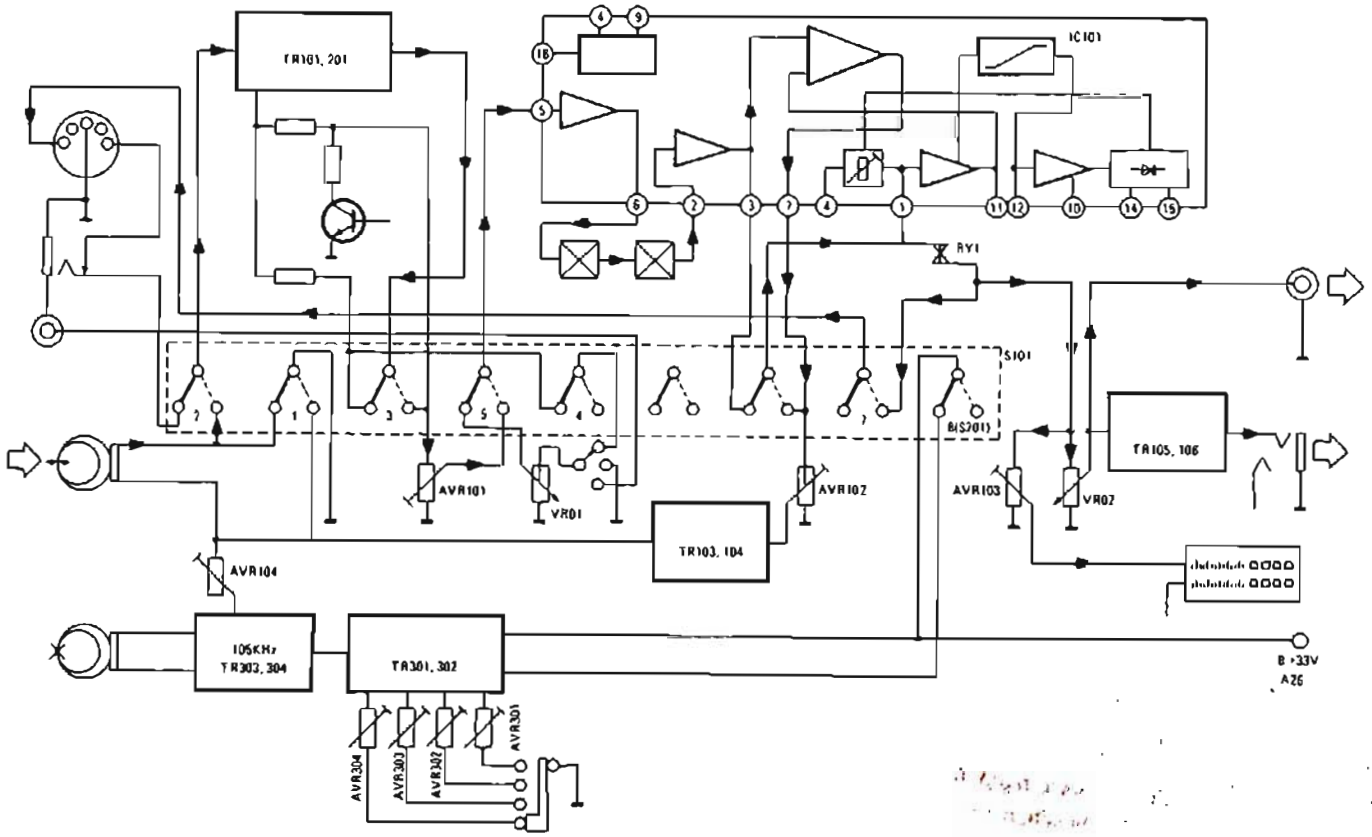

LEVEL DIAGRAM

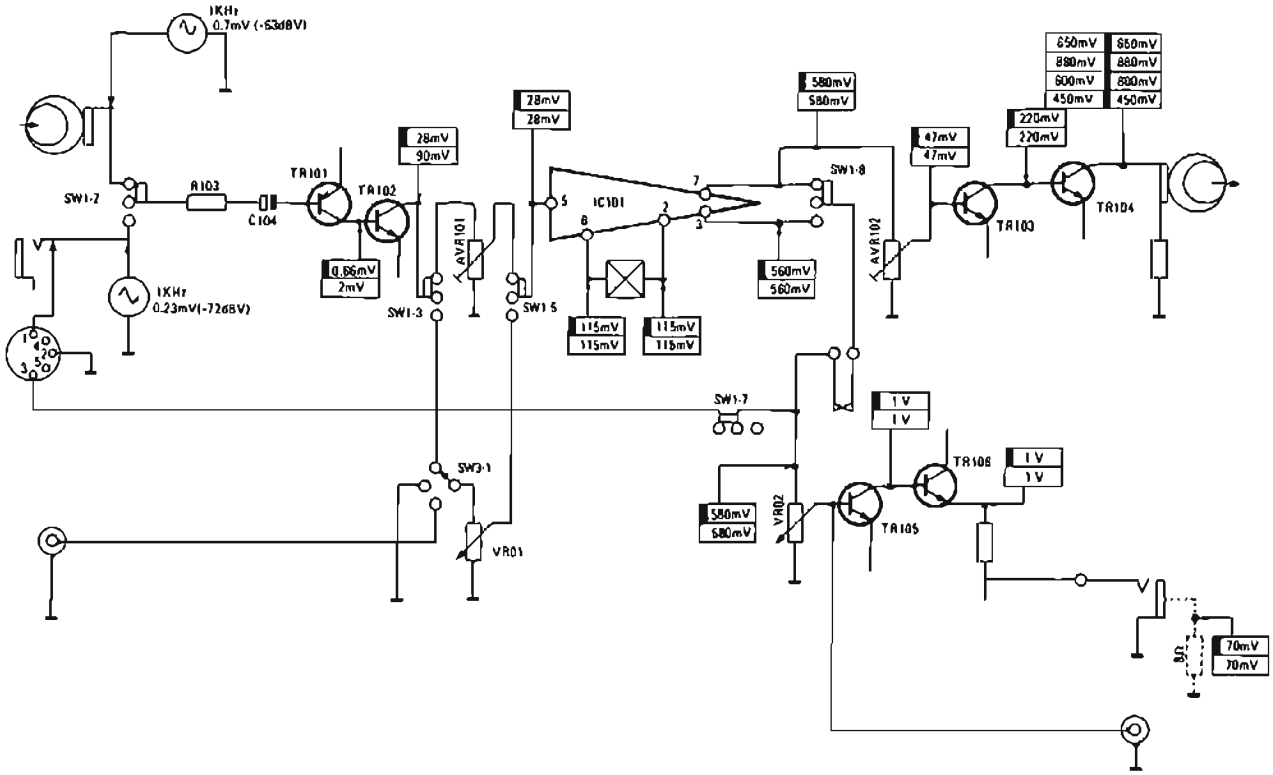

SWITCH OPERATION (1) ON TAPE SELECTOR

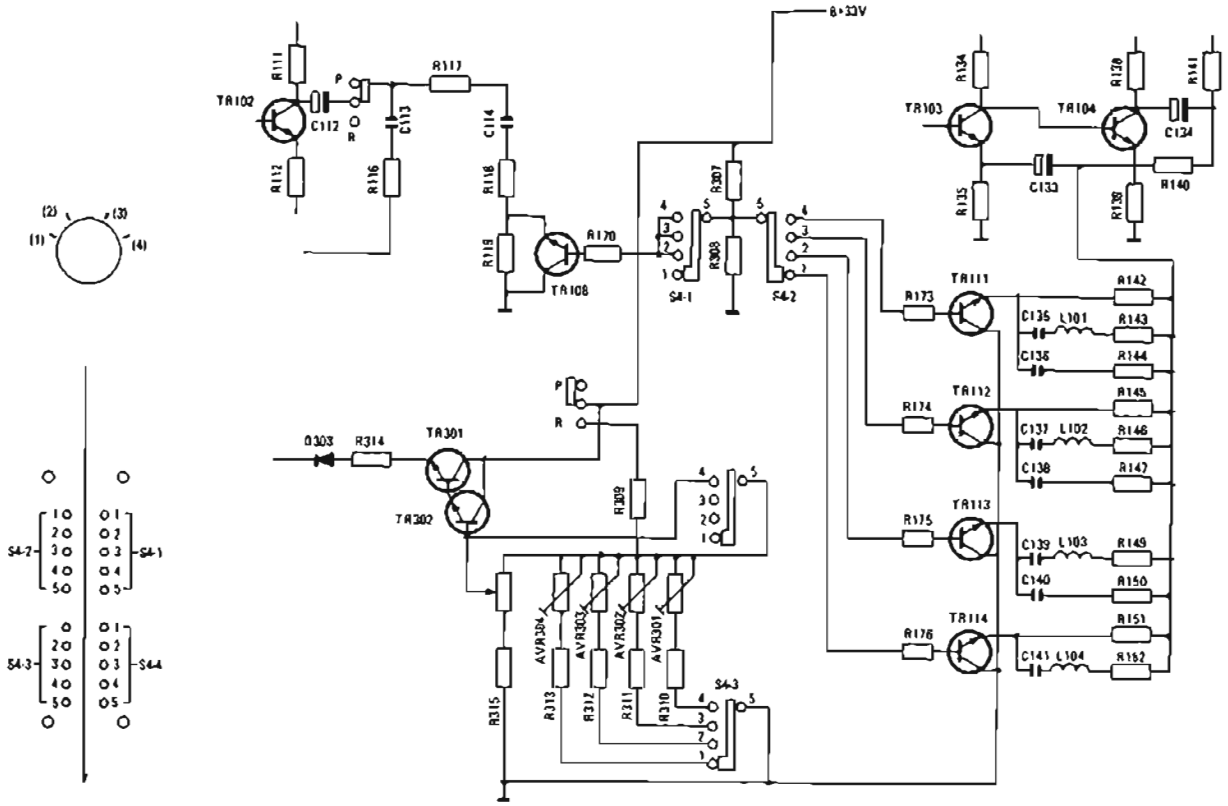

SWITCH OPERATION (2) ON DOLBY

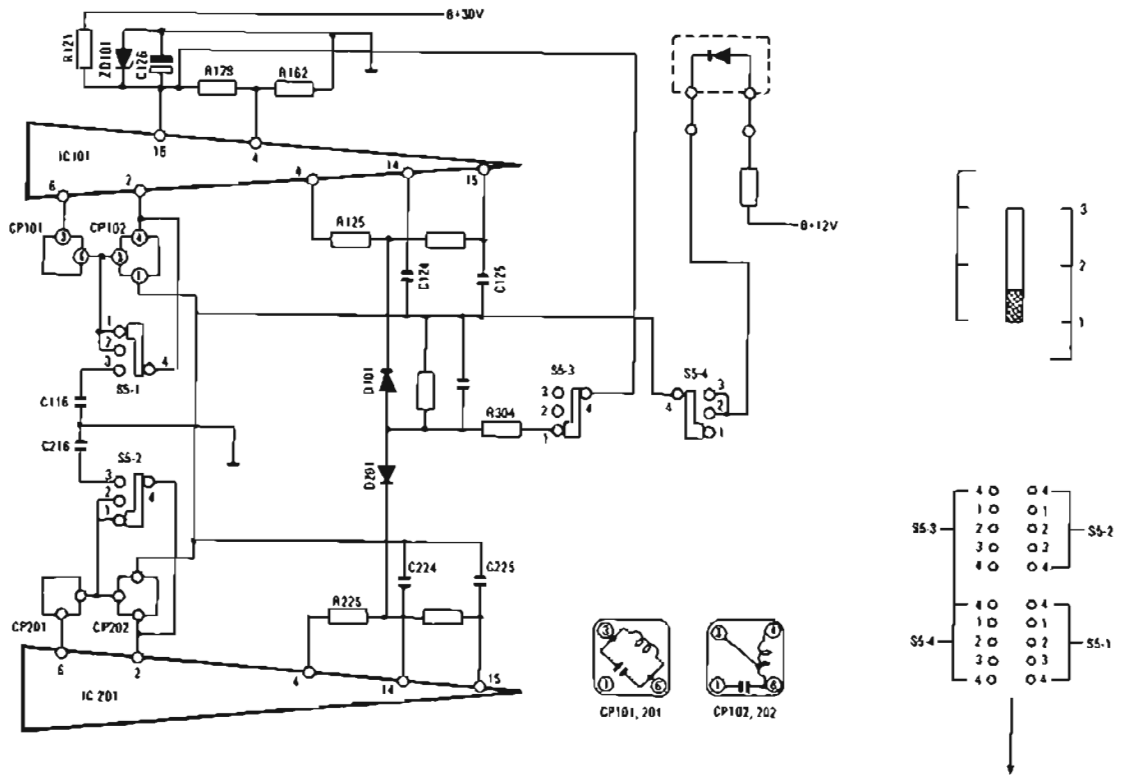

WIRING DIAGRAM

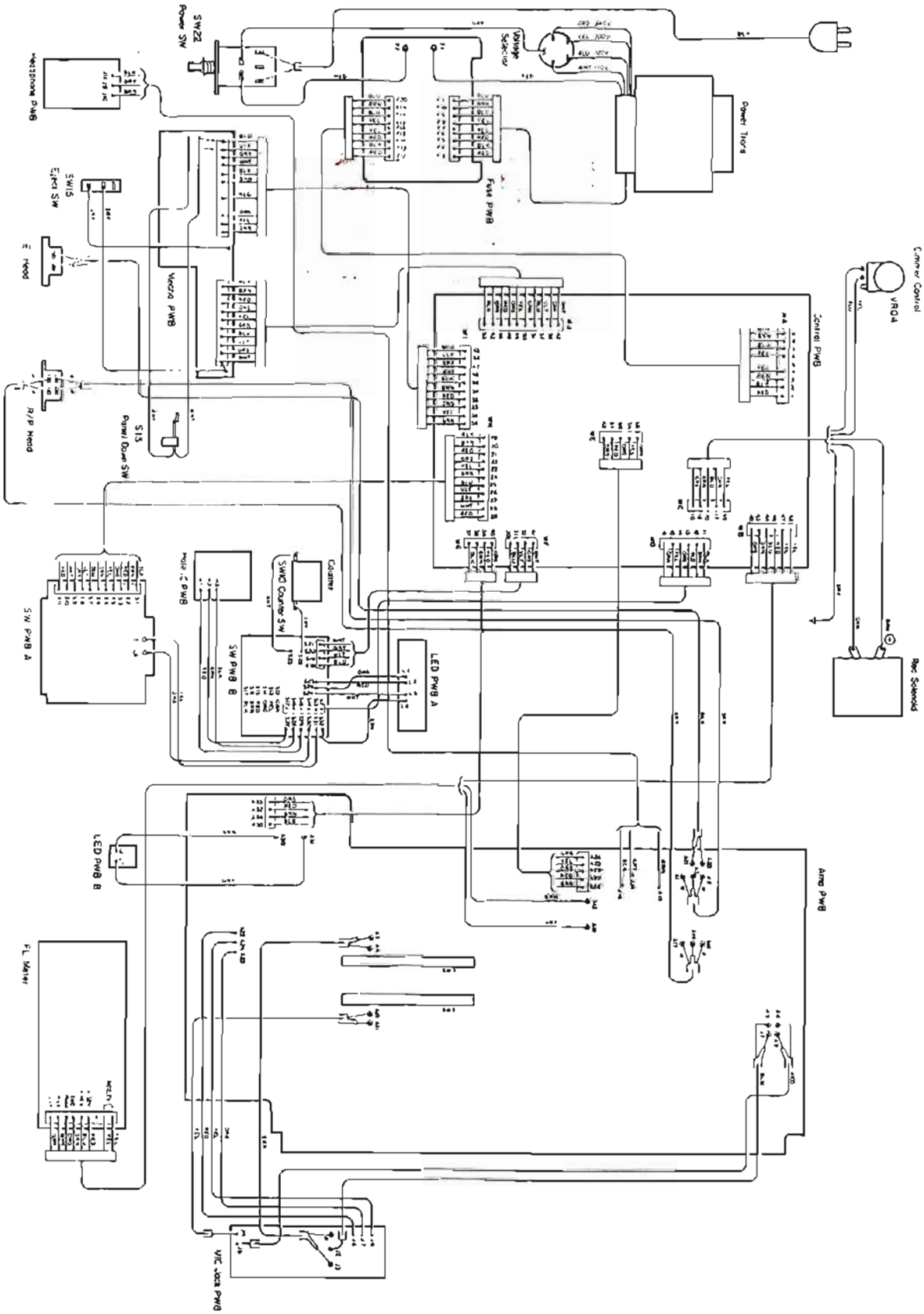

REPLACEMENT PARTS LIST

FOR

NEC

STEREO CASSETTE DECK
AUK-9000(BG)/(SG)

AUK-9000E (BG)

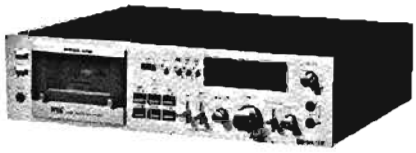

AUK-9000E (SG)

EXPLODED VIEW NO.	SYMBOL NO.	PART NO.	DESCRIPTION	Q'TY	REMARKS
			Transistors		
	TR405	35003517	Transistor 2SA733/733A Q	1	
	TR104, 105, 107, 108, 109, 110, 111, 112, 113, 204, 205, 207, 208, 209, 210, 211, 212, 213, 302, 404, 407, 501, 502, 503, 606, 610	35047216	Transistor 2SC945 P	26	
	TR103, 203	35048305	Transistor 2SC900 E	2	
	TR101, 201	35901705	Transistor 2SA991 E	2	
	TR604, 605	35922504	Transistor 2SB525 D	2	
	TR102, 202	35947105	Transistor 2SC1844 E	2	
	TR106, 206	35947212	Transistor 2SC2002 L	2	
	TR401, 402, 601, 602, 603, 607	35960104	Transistor 2SD355 D	6	
	TR301, 403, 406, 408, 409, 608, 609, 611	35962617	Transistor 2SD794 Q	8	
	TR303, 304	35962912	Transistor 2SD571 L	2	
			Diodes		
	D101, 201, 302, 501, 502, 503, 504, 505, 506, 507, 508, 509, 510, 603, 604, 605, 606, 607, 608, 609, 610, 611, 612, 613	36001522	Diode 1S-953	24	
	D405	36902050	Rectifier SIVB20	1	
	D301, 303, 401, 402, 403, 404, 407, 408, 601, 601	36902051	Diode, Si. 1SR34-100HM	10	
	D401	36902054	Rectifier, Si. S2VB20	1	
	D614	36902055	Diode, 1SR34-100	1	
	LED1	36904037	LED TLR205	1	

EXPLODED VIEW NO.	SYMBOL NO.	PART NO.	DESCRIPTION	QTY	REMARKS
	LED2, 3, 4, 5, 6, 7, 8	36904042	LED TLG205	7	
	ZD402	36905020	Diode, RD18FB	1	
	ZD401	36905021	Diode, RD3.0FB	1	
	ZD404	36905051	Zener Diode, RD-7.5E B1	1	
	ZD405	36905072	Zener Diode, RD-15E B1	1	
	ZD101, 201	36905082	Zener Diode, RD-20E B2	2	
	ZD403	36905106	Zenre Diode, RD-36E B3	1	

Integrated Circuits

	IC101, 201	37901043	IC NE645B	2	
		37903049	IC DN6838	1	
	IC601	37903050	TC-9121P	1	
	IC502	37904001	IC UPD4001C	1	
	IC501	37904018	IC UPD4071C	1	

Resistors

	R401, 402	40003013	R, Solid	10Ω	10%	½W	2	
	R405	40003046	R, Solid	5.6KΩ	10%	½W	1	
	R158, 258	40003161	R, Solid	330Ω	5%	½W	2	
	R168, 268	40102173	R, Carbon	1KΩ	5%	¼W	2	
	R507	40112261	R, Carbon	4.7MΩ			1	
	R314	40912133	R, Carbon	22Ω	5%	½W	1	
	R306	40912141	R, Carbon	47Ω	5%	½W	1	
	R628	40912167	R, Carbon	560Ω	5%	½W	1	
	R404	40912179	R, Carbon	1.8KΩ	5%	½W	1	
	R410	40913165	R, Carbon	470Ω	5%	¼W	1	
	R409	40913173	R, Carbon	1.0KΩ	5%	¼W	1	
	R121, R221	40930054	R, Carbon	560Ω			2	
	R403	40930055	R, Carbon	270Ω			1	
	R107, 207	40950015	R, Metal	47KΩ	¼W		2	
	R104, 204	40950016	R, Metal	82KΩ	¼W		2	
	R105, R205	40950017	R, Metal	120KΩ	¼W		2	
	R101, 201, 315	40982125	R, Carbon	10Ω	5%	¼W	3	
	R146, 160, 246, 260	40982147	R, Carbon	82Ω	5%	¼W	4	
	R112, 212	40982151	R, Carbon	120Ω	5%	¼W	2	
	R143, 243	40982153	R, Carbon	150Ω	5%	¼W	2	
	R124, 224	40982155	R, Carbon	180Ω	5%	¼W	2	
	R159, 259	40982157	R, Carbon	220Ω	5%	¼W	2	
	R623, 624, 625	40982159	R, Carbon	270Ω	5%	¼W	3	
	R108, 149, 208, 249, 524, 629, 630, 631	40982161	R, Carbon	330Ω	5%	¼W	8	

EXPLODED VIEW NO.	SYMBOL NO.	PART NO.	DESCRIPTION				QTY	REMARKS
	R627	40982163	R, Carbon	390Ω	5%	¼W	1	
	R103, 152, 203, 252, 521, 529	40982165	R, Carbon	470Ω	5%	¼W	6	
	R301	40982171	R, Carbon	820Ω	5%	¼W	1	
	R129, 162, 166, 229, 262, 266, 505, 619, 620, 622	40982173	R, Carbon	1.0KΩ	5%	¼W	10	
	R139, 239, 602, 603, 608	40982175	R, Carbon	1.2KΩ	5%	¼W	5	
	R313, 520	40982177	R, Carbon	1.5KΩ	5%	¼W	2	
	R312	40982179	R, Carbon	1.8KΩ	5%	¼W	1	
	R311, 516, 604, 605, 615	40982181	R, Carbon	2.2KΩ	5%	¼W	5	
	R302	40982183	R, Carbon	2.7KΩ	5%	¼W	1	
	R114, 123, 214, 223	40982185	R, Carbon	3.3KΩ	5%	¼W	4	
	R145, 150, 156, 245, 250, 256, 522, 601	40982187	R, Carbon	3.9KΩ	5%	¼W	8	
	R135, 138, 235, 238, 606	40982189	R, Carbon	4.7KΩ	5%	¼W	5	
	R113, 213, 411	40982191	R, Carbon	5.6KΩ	5%	¼W	3	
	R147, 247, 307, 406, 510, 512	40982193	R, Carbon	6.8KΩ	5%	¼W	6	
	R142, 144, 169, 242, 244, 269, 616	40982195	R, Carbon	8.2KΩ	5%	¼W	7	
	R111, 117, 118, 127, 128, 131, 161, 171, 172, 211, 217, 218, 227, 228, 231, 261, 271, 272, 309, 503, 506, 509, 513, 519, 527, 617, 621	40982197	R, Carbon	10KΩ	5%	¼W	27	
	R155, 255, 308, 501	40982199	R, Carbon	12KΩ	5%	¼W	4	
	R102, 141, 202, 241, 502, 607	40982201	R, Carbon	15KΩ	5%	¼W	6	
	R407, 526	40982203	R, Carbon	18KΩ	5%	¼W	2	
	R109, 170, 173, 174, 175, 176, 209, 270, 273, 274, 275, 276, 613, 614	40982205	R, Carbon	22KΩ	5%	¼W	14	
	R116, 151, 167, 216, 251, 267, 316, 523, 609	40982207	R, Carbon	27KΩ	5%	¼W	9	
	R130, 230	40982209	R, Carbon	33KΩ	5%	¼W	2	
	R115, 164, 215, 254, 310, 618	40982211	R, Carbon	39KΩ	5%	¼W	6	
	R122, 133, 222, 233, 303	40982213	R, Carbon	47KΩ	5%	¼W	5	
	R106, 134, 140, 206, 234, 240	40982215	R, Carbon	56KΩ	5%	¼W	6	
	R236	40982217	R, Carbon	68KΩ	5%	¼W	2	
	R304	40982219	R, Carbon	82KΩ	5%	¼W	1	
	R408, 508, 612	40982221	R, Carbon	100KΩ	5%	¼W	3	
	R157, 257	40982225	R, Carbon	150KΩ	5%	¼W	2	
	R125, 225	40982227	R, Carbon	180KΩ	5%	¼W	2	
	R119, 120, 219, 220, 610, 611	40982229	R, Carbon	220KΩ	5%	¼W	6	

EXPLODED VIEW NO.	SYMBOL NO.	PART NO.	DESCRIPTION	QTY	REMARKS
	R126, 226, 518	40982231	R, Carbon 270KΩ 5% ¼W	3	
	R137, 237	40982233	R, Carbon 330KΩ 5% ¼W	2	
	R132, 232, 317, 631	40982235	R, Carbon 390KΩ 5% ¼W	4	
	R511, 517, 525	40982237	R, Carbon 470KΩ 5% ¼W	3	
	R514	40982239	R, Carbon 560KΩ 5% ¼W	1	
	R110, 210	40982241	R, Carbon 680KΩ 5% ¼W	2	
	R504, 528	40982243	R, Carbon 820KΩ 5% ¼W	2	
	R515	40982245	R, Carbon 1.0MΩ 5% ¼W	1	
	R530	40982253	R, Carbon 2.2MΩ 5% ¼W	1	

Capacitors

	C101, 105, 201, 205	42130207	C, Ceramic 50V 330pF	4	
	C122, 222	42130213	C, Ceramic 50V 0.001μF	2	
	C106, 109, 206, 209	42311033	C, Ceramic 50V 33pF	4	
		42606007	C, Metalized Paper 250V 4700pF	2	
	C137, 138, 140, 237, 238, 240, 607	42799031	C, Film 50V 0.022μF	7	
	C102, 202	42970014	C, Poly 50V 470pF 5%	2	
	C113, 116, 117, 213, 216, 217	42970026	C, Poly 50V 4700pF 5%	6	
	C120, 220	42970027	C, Poly 50V 5600pF 5%	2	
	C114, 214	42970029	C, Poly 50V 8200pF 5%	2	
	C148, 248	42970127	C, Poly 50V 100pF 5%	2	
	C147, 247	42970131	C, Poly 50V 150pF 5%	2	
	C103, 203	42970134	C, Poly 50V 200pF 5%	2	
	C308	42970143	C, Poly 630V 10000pF	1	
	C141, 241	42974004	C, Poly 50V 8200pF 5%	2	
	C304, 306	42974005	C, Film 50V 3300pF	2	
	C305, 307	42974016	C, Poly 50V 10000pF	2	
	C135, 235	42974017	C, Poly 50V 12000pF	2	
	C139, 239	42974018	C, Poly 50V 15000pF 5%	2	
	C136, 236	42974019	C, Poly 50V 18000pF	2	
	C118, 218	42974020	C, Poly 50V 27000pF	2	
	C123, 223	42974022	C, Poly 50V 47000pF	2	
	C124, 224	42974026	C, Poly 50V 0.1μF	2	
	C125, 225	42974030	C, Poly 50V 0.33μF	2	
	C512	43011032	C, Elec. 16V 100μF	1	
	C408	43910042	C, Elec. 63V 2200μF	1	
	C108, 208	43980017	C, Elec. 16V 47μF	2	
	C112, 212	43980030	C, Elec. 16V 10μF	2	
	C104, 204	43980043	C, Elec. 35V 4.7μF	2	
	C134, 234	43980045	C, Elec. 25V 22μF	2	

EXPLODED VIEW OF SET (BG)

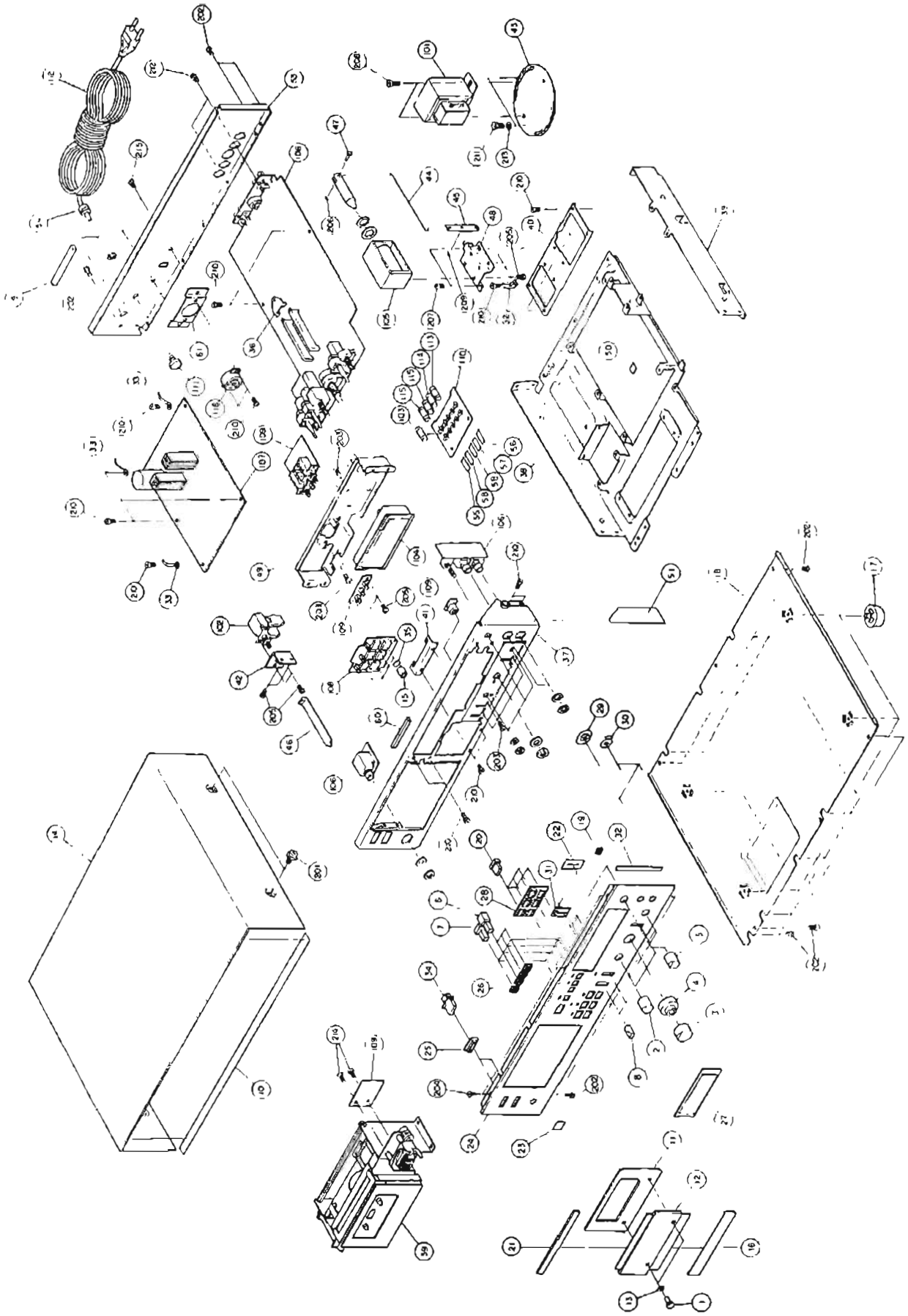

EXPLODED VIEW OF SET (SG)

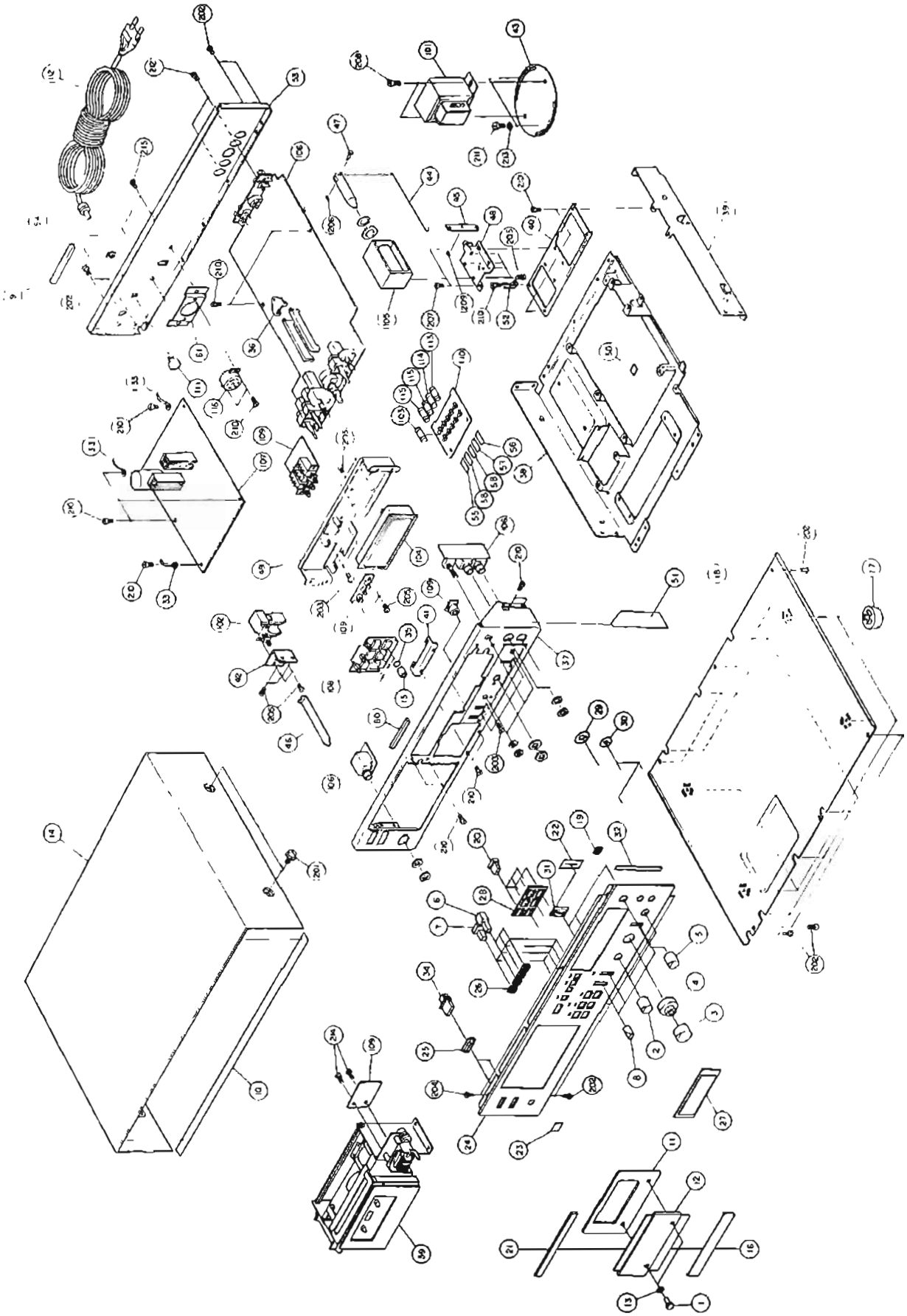

EXPLODED VIEW NO.	SYMBOL NO.	PART NO.	DESCRIPTION	QTY	REMARKS
	C131, 231	43980049	C, Elec. 50V 0.22μF	2	
	C115, 215	43980051	C, Elec. 50V 0.47μF	2	
	C401, 410	43993015	C, Elec. 10V 100μF	2	
	C119, 127, 128, 129, 130, 133, 143, 219, 227, 228, 229, 230, 233, 243, 502, 503, 504, 505, 507, 508, 510, 511, 601, 602, 604, 611	43993024	C, Elec. 16V 10μF	26	
	C110, 220	43993025	C, Elec. 16V 22μF	2	
	C409, 501, 605, 608	43993026	C, Elec. 16V 33μF	4	
	C411	43993028	C, Elec. 16V 100μF	1	
	C121, 221	43993029	C, Elec. 16V 220μF	2	
	C412	43993032	C, Elec. 16V 1000μF	1	
	C107, 207	43993037	C, Elec. 25V 10μF	2	
	C132, 232	43993038	C, Elec. 25V 22μF	2	
	C126, 144, 226, 244	43993041	C, Elec. 25V 100μF	4	
	C402	43993043	C, elec. 25V 330μF	1	
	C407	43993047	C, Elec. 25V 3300μF	1	
	C301	43993049	C, Elec. 35V 10μF	1	
	C111, 211, 303, 406	43993053	C, Elec. 35V 100μF	4	
	C309	43993054	C, Elec. 35V 220μF	1	
	C245, 246, 603, 606, 609, 610	43993060	C, Elec. 50V 1μF	6	
	C506	43993061	C, Elec. 50V 2.2μF	1	
	C509	43993062	C, Elec. 50V 3.3μF	1	
	C405	43993070	C, Elec. 50V 330μF	1	
	C404	43993085	C, Elec. 63V 470μF	1	

Electrical Parts

	H408	18287821	Heat Sink IC-1625-ST	1	
	H403, 409	18289711	Heat Sink	2	
101		45027088	Trans. Power 9000E	1	
	L301	61904394	OSC Coil 9000	1	
	L102, 202	61911075	Coil FL7H392J	2	
	L101, 103, 201, 203	61911078	Coil FL7H682J	4	
	CP101, 201	61911101	Filter FB-7S, A	2	
	CP102, 202	61911102	Filter FB-7S, B	2	
	CP103, 203	61911108	Low-pass Filter 105KHz	2	
	L104, 204	61911122	Coil	2	
		65599001	Switch, Micro AC125V 5A	1	
116		65901039	Switch, Voltage Selecter	1	
	S1	65902052	Switch, ESD-80215	1	

EXPLODED VIEW NO.	SYMBOL NO.	PART NO.		DESCRIPTION	Q'TY	REMARKS
		AUK-9000E(BG)	AUK-9000E(SG)			
	S2	65902054		Switch, Slide	1	
102		65904049		Switch, Power	1	
		65904118		Push Switch SUF-3	1	
		65904119		Switch, EVQ-PIR	6	
		65907052		Leaf Switch	1	
	RY1	65910053		Relay L-23M	1	
	S3, 6	65911077		Lever, Switch SLR823N	2	
	S5	65911078		Lever, Switch SLR843S	1	
	S4	65912020		Rotary Switch SRZW44S	1	
113	SU402	66671010		Fuse 315MA	1	
114	FU403	66671012		Fuse 630MA	1	
103	FU401	66901030		Fuse 500MAT SEMKO	1	
115	FU404, 405	66901031		Fuse 1.25A SEMKO	2	
		67910008		Pilot Lamp	1	
104		67950239		Bargraph Meter	1	
112		79759123		Line Cord Cenelec	1	
105		79762035		Solenoid Coil	1	
		79799118		Cover	2	
106		87607101		Amp. PWB Ass'y	1	
107		87607201		Control PWB Ass'y	1	

Knobs

20		18458361		Mecha Button (A)	6	
2		18458651	18458321	Knob, Rotary	2	
3		18458672	18458342	Knob (A), Volume	1	
4		18458681	18458351	Knob (B), Volume	1	
34		18459181	18459541	Eject Button	2	
5		18459241	18459221	Knob, Bias	1	
6		18459311	18459441	Knob, Memory	3	
7		18459581	18459301	Knob, Counter	1	
8		18459891	18459901	Knob, Lever	3	

Cabinet

17		18286241		Foot UL	4	
21		18710341	18710751	Cassette Panel (B)	1	
11		18711281	18711431	Cassette Ornament Plate	1	
16		18711791	18712041	Cassette Panel (A)	1	
27		19407551		Aperture, Meter	1	
12		19407821		Cassette Case Ornament	1	
		19407981		Aperature Frame	1	

EXPLODED VIEW NO.	SYMBOL NO.	PART NO.		DESCRIPTION	Q'TY	REMARKS
		AUK-9000E(BG)	AUK-9000E(SG)			
		19408021		Lamp Lens (B)	1	
18		19526661		Bottom Cover	1	
14		19526721		Cabinet	1	
53		19527041	19527141	Rear Panel	1	
		88610641	88611641	Front Panel Sub-ass'y	1	

Packing Materials & Accessories

		18801031	Bag, Polyethylene (1/12)	1	
		19800672	Bag-B, Polyethylene	1	
		19804061	Sheet, Protection	2	
		19804261	Bag, Protection	1	
		19804481	Spacer	2	
		19804511	Carton Box	1	
		78922213	Instruction Manual	1	

Miscellaneous Parts

		18283222	Hexagon Spanner 1.5	1	
33		18285941	LUG	3	
		18286231	Head Cleaning T1P2	1	
1		18458311	18457921	Ornament Screw	2	
61		18510842	Bracket, Switch Mount	1	
9		18601682	Filler	2	
10		18603671	Cushion Piece	1	
		18712081	Reel Ornament	2	
		18712371	18712361	Plate	1	
		18752561	Label	1	
		18753101	Label	1	
56		18754281	Fuse, Label S315MAT	1	
55		18755181	Fuse Label	1	
58		18755221	Fuse Label	2	
57		18755241	Fuse, Label	1	
23		18755941	Label	1	
		18850941	Washer, NL (0.3*4.2*10)	1	
206		18851321	E-Clip Dia.	4	
215		18852251	Special Screw	2	
207		18852641	Fin Neck Screw	2	
208		18852691	PT4*8*15BF	2	
		18853301	Eyelet	2	
209		18853341	E Ring	5	
13		18853431	Polyethylene Slider	2	
201		18853701	Special, Screw	4	

EXPLODED VIEW NO.	SYMBOL NO.	PART NO.		DESCRIPTION	Q'TY	REMARKS
		AUK-9000E(BG)	AUK-9000E(SG)			
202		18853791		Screw, Special	23	
1.2		18853941		Screw, Special	2	
		18853951		Screw, Special	8	
		19407272		LED Holder	1	
28		19407931	19407771	Button Bracket	1	
		19407971		Holder Lock Collar	1	
19		19408131		LED, Collar	8	
		19408151		LED, Holder	7	
		19516371		Lug Ass'y B	2	
36		19525111		REC SW Bracket	1	
		19526651		Lamp Holder	1	
37		19526731		Sub Chassis	1	
42		19526811		Power Switch Bracket	1	
43		19526821		Trans Bracket	1	
		19526831		Shield Case (A)	1	
44		19526861		Over-storke Spring	1	
45		19526872		Solenoid Lever	1	
		19527561		Counter Collar (B)	2	
		19527571		Cassette Holder Collar	2	
		19527621		Eject Lever	1	
		19527631		Cassette Holder Spring	2	
		19527641		Switch Holder Spring	1	
		19527651		Spacer	2	
46		19527661		Power Switch Lever	1	
		19527671		Cassette Housing	1	
		19527681		Switch Holder Lever	1	
		19527691		L/R Connection Shaft	2	
		19527703		Mecha Mounting Bracket (R)	1	
		19527741		Cassette Holder	1	
		19527752		Holder Lock	1	
		19527961		Housing Open Spring (A)	1	
		19527972		Housing Open Spring (B)	1	
		19527982		Lock Spring	1	
		19527991		Dump Coil Spring	1	
47		19528071		REC Shaft (B)	1	
48		19528111		Solenoid Holder Ass'y	1	
		19528141		Holder Lock Lever Ass'y	1	
		19528171		Mecha Mounting Bracket (L) Ass'y	1	
		19528181		Cassette Holder Arm Ass'y	1	
		19528321	19528151	Cassette Housing	1	
49		19528342		Bracket	1	

EXPLODED VIEW NO.	SYMBOL NO.	PART NO.		DESCRIPTION	QTY	REMARKS
		AUK-9000E(BG)	AUK-9000E(SG)			
		19528601		PWB Collar (B)	2	
		19528621		Guide	1	
15		19604261		Spring	12	
22		19604271		Cover	3	
29		19604291		Cover	1	
30		19604301		Cover	3	
32		19604321		Cover	2	
		19604371		Piece Deadlight	1	
60		19604381		LED Piece Deadlight	1	
51		19604391		Cushion	1	
		19604401		Reflector, Plate	1	
35		19604411		Mecha Switch Spacer	6	
211		24851701		Screw, F.T*4*8*15BF	2	
212		24851791		Push Rivet	2	
213		24852531		Masher Special	2	
		70599039		Connector-SP S-19118	1	
		70905152		Jack	1	
		70905230		Mic Jack S-G2212	2	
		70905231		Head, Jack S-G2312	1	
		70906049		Pin Plug Cord 1.2	2	
		71205034		Fuse Holder Dia. 5.2	10	
52		71905077		2P Terminal	1	
214		91012322		Screw, CPIMS*2.6*5*15CF	2	
205		91013032		Screw, CPIMS*3*6*15CF	21	
203		91053032		Screw, CPIMS*3*6*15CF	13	
204		91053036		Screw, CPIMS*3*6*3*KF	3	
		18289451		Dumper Unit	1	
		18289681		Counter	1	
		19604151		Belt	1	
		72951381		Mecha Unit T203	1	

Controls

	AVR304	41950016	R, Variable 10KΩ	1	
	AVR101, 102, 201, 202, 302	41950023	Slide Pot 50KΩ, B	5	
	AVR103, 203, 301, 601	40950024	R, Variable 100KΩ, B	4	
	AVR303	41950027	R, Variable 20KΩ, B	1	
	VR01	41950256	Clutch Volume 100KA	1	
	VR02	41950319	VR, GM80-10KB	1	
	VR03	41950320	VR, 20KB-20KB C.C	1	
111	VR04	41950321	VR, VM10-10KB	1	
	AVR104, 204	41952005	VR, 10KB	2	

EXPLODED VIEW OF MACHANICAL UNIT

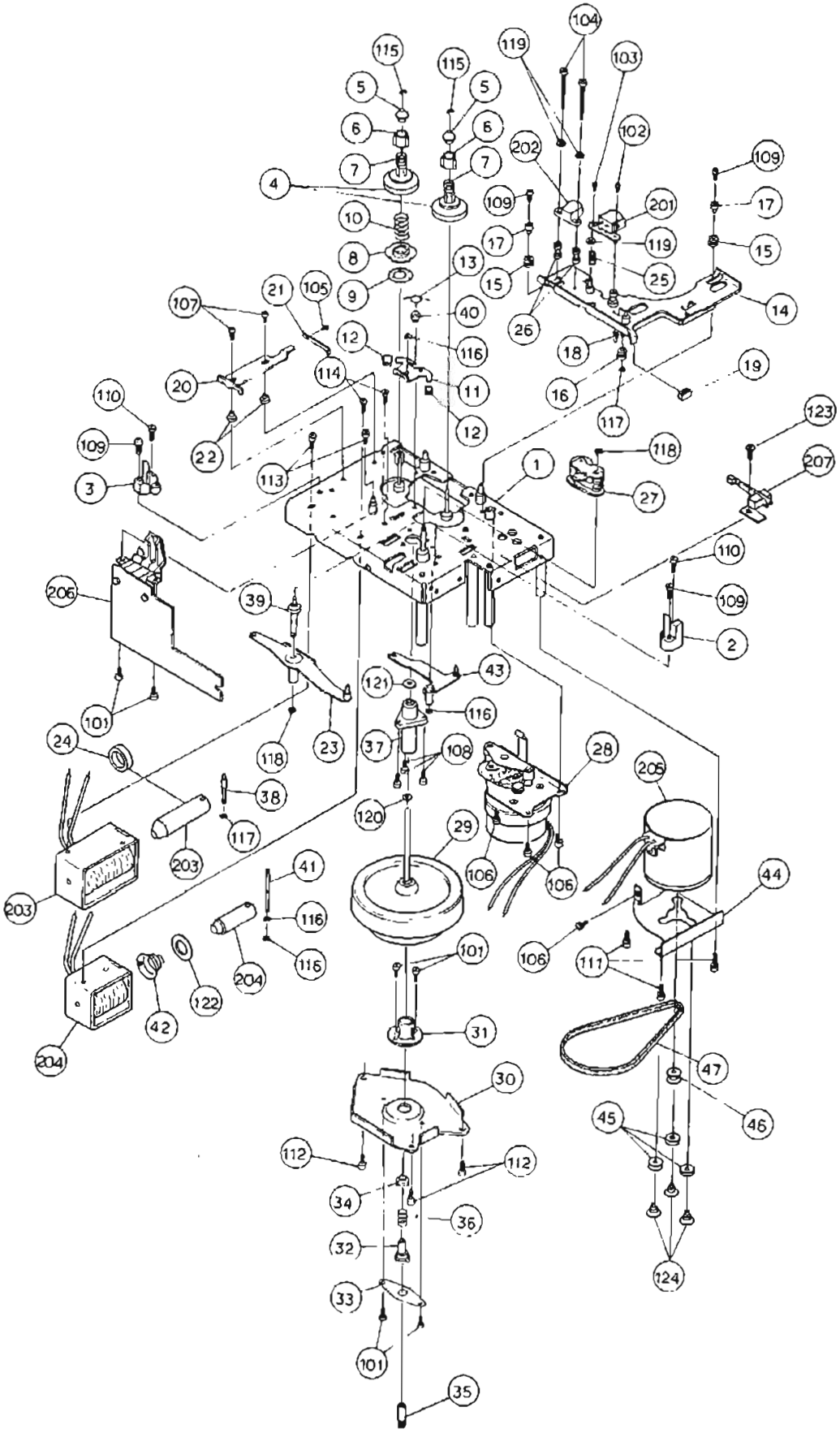

MECHANISM PARTS LIST
T-203 (72951381)

EXPLODED VIEW NO.	SYMBOL NO.	PART NO.	DESCRIPTION	Q'TY	REMARKS
1		19982311	Chassis Ass'y	1	1,000.00
2		19983001	Cassette Guide R	1	80.00
3		19983011	Cassette Guide L	1	80.00
4		19982321	Reel Support	2	50.00
5		19982331	Cap, Reel Support	2	20.00
6		19982341	Reel Feather	2	20.00
7		19982351	Reel Spring SP	2	10.00
8		19982361	Rear Tension Plate	1	20.00
9		19982371	Felt	1	40.00
10		19982381	Rear Tension Plate	1	10.00
11		19982391	Brake Arm A	1	50.00
12		19982401	Brake Shoe	2	10.00
13		19982411	Brake Arm SP	1	12.00
14		19982421	Head Panel	1	200.00
15		19982431	Guide Roller A	2	12.00
16		19982441	Guide Roller B	1	12.00
17		19982451	Guide Roller	2	4.00
18		19982461	Head Panel SP	1	12.00
19		19982471	Panel Stopper	1	12.00
20		19982481	Panel Lock Plate	1	40.00
21		19982491	Panel Lock Plate SP	1	14.00
22		19982501	Lock Plate Collar	2	8.00
23		19982511	Pulley Arm Ass'y	1	120.00
24		19982521	Silencer Rubber	1	20.00
25		19982531	RPH.SP	1	8.00
26		19982541	EH Collar	2	12.00
27		19982551	Pinch Roller Arm Ass'y	1	300.00
28		19982561	Drive Unit Ass'y	1	2,000.00
29		19982571	Flywheel Capstan	1	1,200.00
30		19982581	FL Hold Plate B	1	100.00
31		19982591	FL Guide	1	20.00
32		19982601	FL Holder	1	16.00
33		19982611	FL Guide SP Board	1	20.00
34		19982621	Capastan, Plate	1	10.00
35		19982631	FL Thrust Screw	1	12.00
36		19982641	FL.SP	1	10.00
37		19982651	Flywheel Metal	1	200.00
38		19982661	Plunger Shaft P	1	12.00
39		19982671	Pull Arm Shaft	1	20.00
40		19982681	Pull Arm Nut	1	10.00
41		19982691	Plunger Shaft L	1	20.00
42		19982701	Lock Plunger SP	1	12.00

EXPLODED VIEW NO.	SYMBOL NO.	PART NO.	DESCRIPTION	QTY	REMARKS
43		19982711	Lock Arm Ass'y	1	100.00
44		19982721	Motor Bracket	1	80.00
45		19982731	Motor Rubber	3	10.00
46		19982741	Motor Pulley	1	60.00
47		19982751	Main Belt	1	160.00
101		19982761	M2*4 Sems	6	2.00
102		19982771	M2*5 Pan-head	1	2.00
103		19982781	M2*6	1	2.00
104		19982791	M2*14 Pan-head	2	2.00
105		19982801	M2*2.3	1	2.00
106		19982811	M2.3*4 Sems	4	2.00
107		19982821	M2.3*4 Bind	2	2.00
108		19982831	M2.3*6 Sems	3	2.00
109		19982841	M2.3*8	4	2.00
110		19982851	M2.3*12	2	2.00
111		19982861	M2.6*5 Sems	3	2.00
112		19982871	M2.6*5 Round Countersunk	3	2.00
113		19982881	M3*4 Pan-head	2	2.00
114		19982891	M3*3.5	2	2.00
115		19982901	E-ring ϕ1.2	2	2.00
116		19982911	E-ring ϕ1.5	4	2.00
117		19982921	E-ring ϕ2	2	2.00
118		19982931	E-ring ϕ2.5	2	2.00
119		19982941	Plain Washer M2	3	2.00
120		19982951	Nylon Washer	1	2.00
121		19982961	Washer	1	2.00
122		19982971	Nylon Washer	1	2.00
123		18853951	Special Screw	1	2.00
124		19982991	Collar Screw S	3	8.00
201		79751075	RP Head	1	1,520.00
202		79751077	E Head	1	400.00
203		19983021	Pull Plunger	1	1,200.00
204		19983031	Lock Plunger	1	1,000.00
205		19983041	Motor	1	1,480.00
206		19983051	PWB Ass'y	1	1,740.00
207		65907052	Leaf Switch	1	