TECHNICAL INFORMATION AND SERVICE DATA

AWA RADIOLA

Models 725-C, 808-G & 808-GZ

FIVE VALVE, TWO BAND, 32 VOLTS D.C. OPERATED SUPERHETERODYNES

ISSUED BY

AMALGAMATED WIRELESS (A/SIA) LTD.

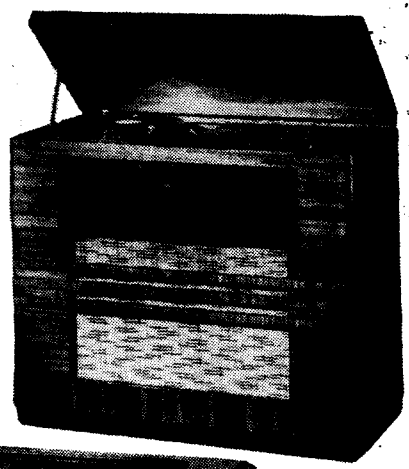

808-G

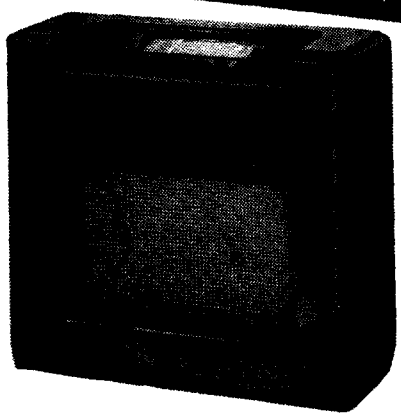

725-C

ELECTRICAL SPECIFICATIONS.

FREQUENCY RANGES:

Medium Wave	540-1600 Kc/s. (555-187.5M.)
Short Wave	6-18 Mc/s. (50-16M.)
INTERMEDIATE FREQUENCY	455 Kc/s.
DIAL LAMPS	6.3 volts, 0.25 amp. M.E.S.
FUSES	5 amp. Cartridge

VALVE COMPLEMENT:

(1) 6BA6 R.F. Amplifier
(2) 6BE6 Converter
(3) 6BA6 I.F. Amplifier
(4) 6AV6 Detector, A.F. Amplifier, A.V.C.
(5) 6V6GT Output

VIBRATOR POWER UNITS:

Models 725-C, 808-GZ	24651
Model 808-G	24651 and 25380

VIBRATOR CARTRIDGE:

Unit No. 24651	V5258
Unit No. 25380	V5123/55

LOUDSPEAKER (Permanent Magnet):

12 inch — Code No. AU55.
Transformer — TU201
V.C. Impedance — 6.5 ohms at 400 C.P.S.
Undistorted Power Output—2.5 watts.

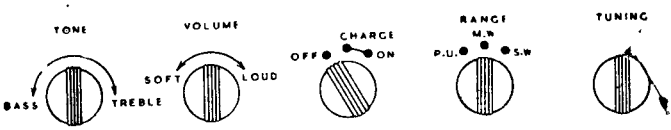

MECHANICAL SPECIFICATIONS.

Cabinet Dimensions (inches):	Height	Width	Depth
Model 725-C	32	30	13
Model 808-G	31	36	$16\frac{7}{8}$
Model 808-GZ	31	36	$17\frac{3}{4}$
Chassis Base Dimensions (inches)	$2\frac{1}{2}$	11	$5\frac{1}{2}$

Weight (nett lbs.):	
Model 725-C	63 lbs.
Models 808-G, 808-GZ	156 lbs.
Cabinet Finish	Walnut Veneer.

General Description.

The model 725-C is a 5 valve, two band, 32 volts D.C. operated superheterodyne.

Features of its design include: Tropic-proof construction, automatic volume control, magnetite cores in I.F. transformers and broadcast oscillator coil, air-dielectric trimming capacitors, straight-line edge lighted dial scale.

Models 808-G and 808-GZ are Radio-Phonograph combinations and have similar features to the 725-C. In addition, model 808-G incorporates the Garrard RC65 Automatic Record Changer, capable of playing up to eight 10-inch and 12-inch records, mixed in any order, without attention. Model 808-GZ incorporates the Garrard RC70A Automatic Record Changer, capable of playing up to ten records of equal size—either 10-inch or 12-inch.

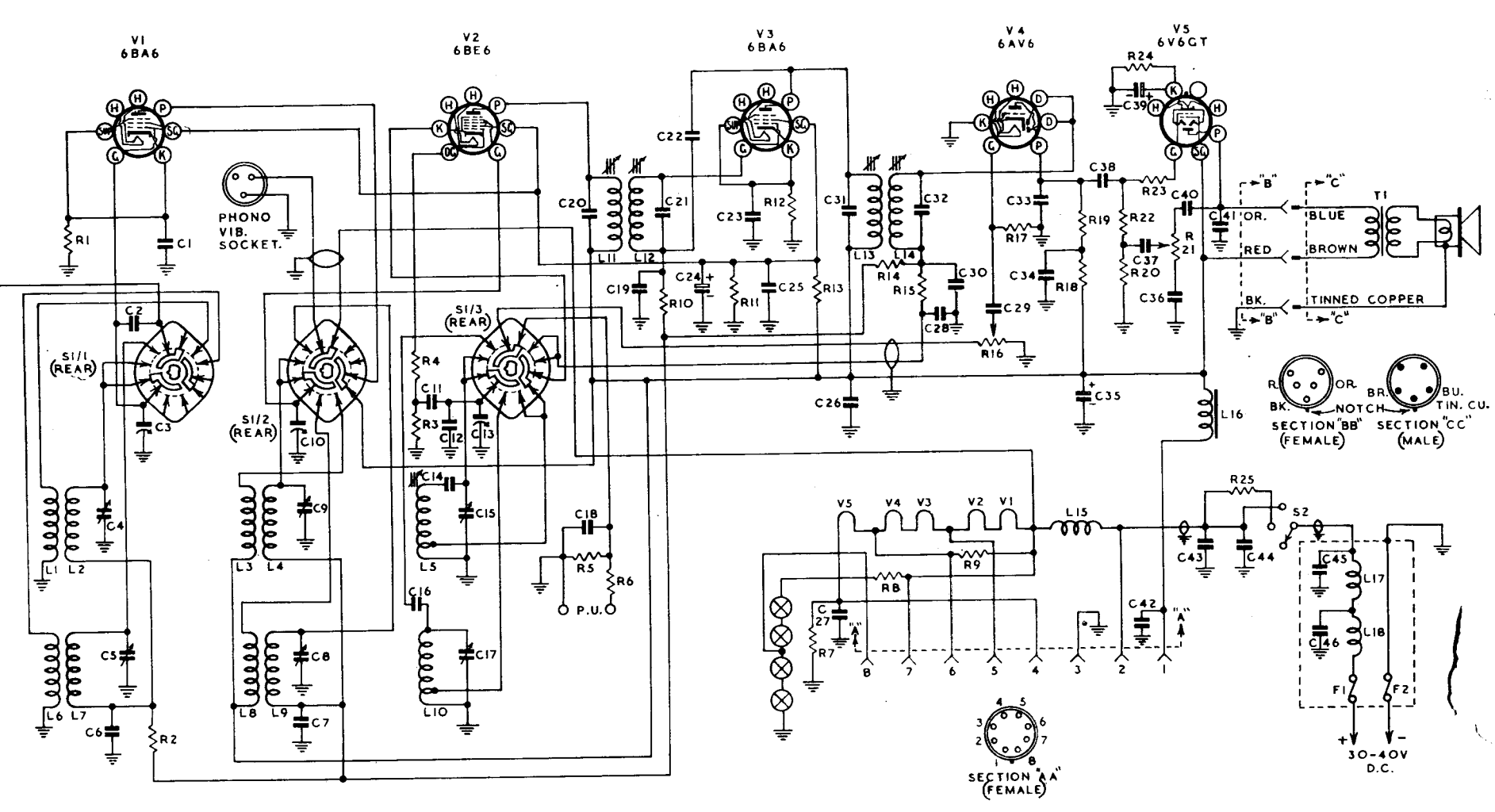
V1
6BA6
V2
6BE6
V3
6BA6
V4
6AV6
V5
6V6GT
PHONO
VIB.
SOCKET.
S1/1
(REAR)
S1/2
(REAR)
S1/3
(REAR)
P.U.
T1
OR.
RED
BK.
BLUE
BROWN
TINNED COPPER
"B"
"C"
R.
OR.
BK.
NOTCH
BR.
BU.
TIN. CU.
SECTION "BB"
(FEMALE)
SECTION "CC"
(MALE)
SECTION "AA"
(FEMALE)
30-40V
D.C.
S2
F1
F2

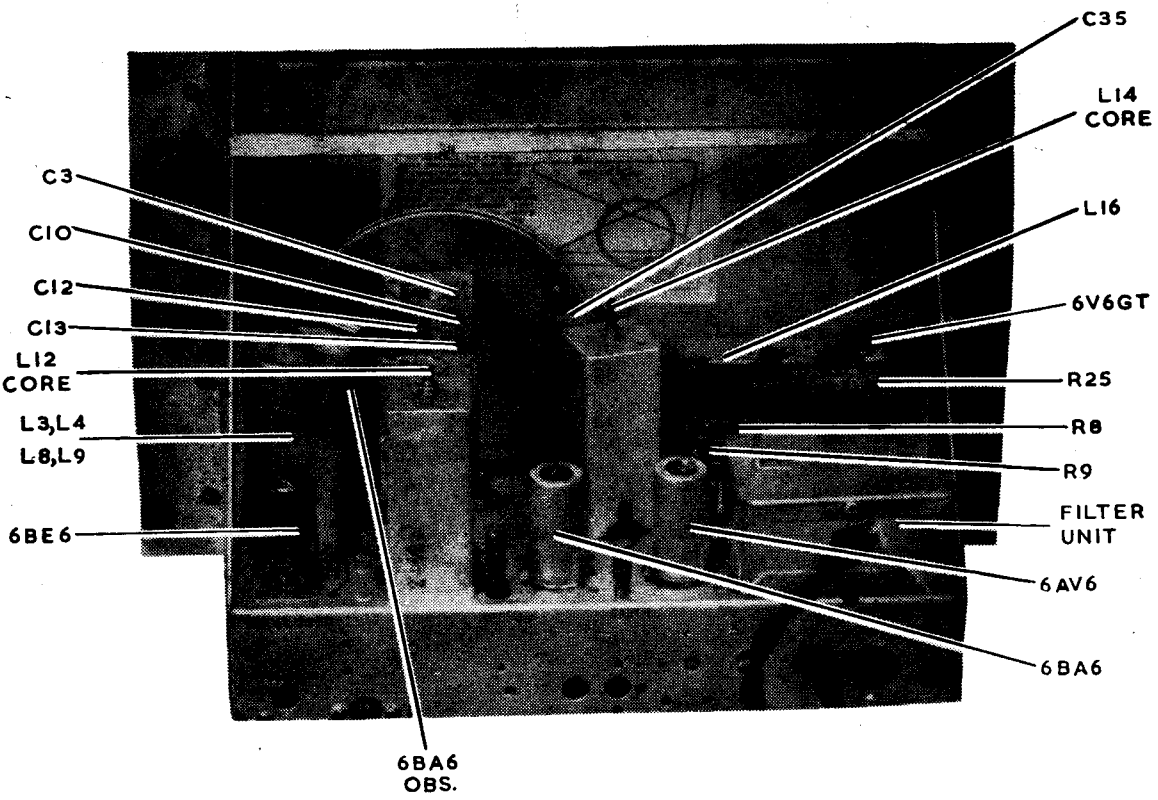

CHASSIS, TOP VIEW — 725-C, 808-G, 808-GZ.

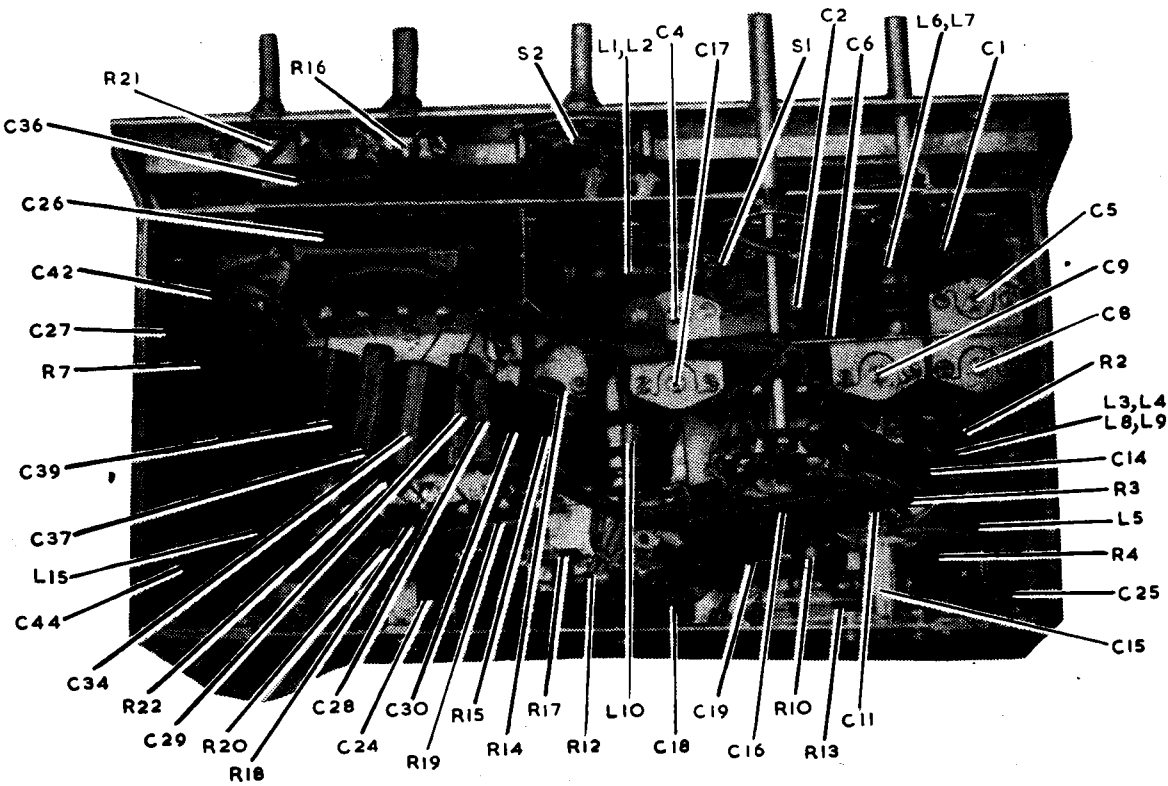

CHASSIS, UNDERNEATH VIEW — 725-C, 808-G, 808-GZ.

ALIGNMENT PROCEDURE.

Manufacturer's Setting of Adjustments.

The receiver is tested by the manufacturer with precision instruments and all adjusting screws are sealed. Re-alignment should be necessary only when components in tuned circuits are repaired or replaced or when it is found that the seals over the adjusting screws have been broken.

It is especially important that the adjustments should not be altered unless in association with the correct testing instruments listed below.

Under no circumstances should the plates of the ganged tuning capacitor be bent, as the unit is accurately aligned during manufacture and cannot be readjusted unless by skilled operators using specialised equipment.

For all alignment operations, connect the low side of the signal generator to the receiver chassis, and keep the generator output as low as possible to avoid A.V.C. action. Also, keep the volume control in the maximum clockwise position.

Testing Instruments.

(1) A.W.A. Junior Signal Generator, type 2R3911, or

(2) A.W.A. Modulated Oscillator, type J6726.
If the modulated oscillator is used, connect a 0.25 megohm non-inductive resistor across the output terminals, and, for short wave alignment, an additional 400 ohms non-inductive resistor in series with the "high" output lead of the instrument.

(3) A.W.A. Output Meter, type 2M8832.

ALIGNMENT TABLE.

Alignment Order	Connect "high" side of Generator to:	Tune Generator to:	Tune Receiver Dial to:	Adjust for maximum peak output
1	R.F. Section of Gang (centre portion)	455 Kc/s.	540 Kc/s.	L14 Core
2	R.F. Section of Gang (centre portion)	455 Kc/s.	540 Kc/s.	L13 Core
3	R.F. Section of Gang (centre portion)	455 Kc/s.	540 Kc/s.	L12 Core
4	R.F. Section of Gang (centre portion)	455 Kc/s.	540 Kc/s.	L11 Core
	Repeat the above adjustments until the maximum output is obtained.			
5	Aerial Terminal	600 Kc/s.	600 Kc/s.	Osc. Core Adj. (L5)*
6	Aerial Terminal	1500 Kc/s.	1500 Kc/s.	Osc. Adj. (C15)
7	Aerial Terminal	1500 Kc/s.	1500 Kc/s.	R.F. Adj. (C9)
8	Aerial Terminal	1500 Kc/s.	1500 Kc/s.	Aer. Adj. (C4)
	Repeat adjustments 5, 6, 7 and 8.			
9	Aerial Terminal	16 Mc/s.	16 Mc/s.	Osc. Adj. (C17)**
10	Aerial Terminal	16 Mc/s.	16 Mc/s.	R.F. Adj. (C8)†
11	Aerial Terminal	16 Mc/s.	16 Mc/s.	Aer. Adj. (C5)†

*Rock the tuning control back and forth through the signal.

**Use minimum capacity peak if two can be obtained. Check to determine if C17 has been adjusted to correct peak by tuning the receiver to approximately 15.09 Mc/s. where a weaker signal should be received.

†Use maximum capacity peak if two can be obtained.

Connection to Power Supply.

The receiver will not operate unless it is connected to the power point in the correct polarity. It is necessary, therefore, that all power points to which the receiver may be connected are wired with the same polarity. The plug should be wired to the receiver power cable so that the red wire connects to the positive side of the supply and the black wire to the negative side.

A warning is given on the use of "Double Adaptors," which normally have one outlet connected in the reverse polarity to the other. If the use of a "Double Adaptor" is essential, the outlet with the correct polarity only should be used for the receiver.

Interference Suppression.

The receiver has a filter unit built in to suppress any interference entering the receiver via the power supply. If, however, the receiver is in operation whilst the motor generator is running, some further form of suppression will generally be necessary to reduce interference which is radiated from the generator and picked up by the receiver aerial.

It is recommended that the following be carried out:— To each generator brush connect one end of a 0.5 uF capacitor. Then connect the other ends of the capacitors to the generator housing.

The generator housing should be earthed, using a wire as short as possible and of not less than 7/.029 insulated cable.

Chassis Removal.

First, remove the control knobs. Each knob is held by a set screw. Then, disconnect the Loudspeaker, Vibrator, and in the case of models 808-G and 808-GZ, the Pick-up Cables.

The chassis is held in the cabinet by four nuts, two at each end of the dial frame assembly. Removal of these enables the chassis to be withdrawn from the cabinet.

Dial Pointer Adjustment.

The dial pointer is held in position on the drive cord by two rubber-lined clips. To alter the position of the pointer, loosen the two holding clips slightly and move the pointer in the required direction. It is important to reclamp the clips after any adjustment of the dial pointer.

Drive Cord Replacement.

Follow the diagram which is affixed to the back of the dial frame assembly. This shows the route of the cord and the method of attachment.

VIBRATOR POWER UNIT No. 24651 MODIFICATION.

Some trouble has been experienced on these Vibrator Power Units due to vibrator contact flash over on starting. The following modification has been well tried in the field and is recommended as a worthwhile contribution towards more reliable performance.

The change consists of removing the two secondary buffer condensers C3 and C4 (refer Vibrator Power Unit Circuit) and replacing them with two 0.5 μF 400v. paper condensers connected in parallel across the primary of the vibrator transformer, i.e., from pin 1 to pin 5 of the vibrator socket.

Due to the size of the 0.5 μF condensers, they will not fit under the chassis but must be placed beside the transformer on top of the chassis and suitable connection arrangements made. (See photograph below.)

In some units resistor R2 is a 5 ohm 3 watt and is mounted below the chassis, in other units resistor R2 is a 5 ohm 5 watt resistor and is mounted above the chassis, but must be moved to the position shown in photograph below to enable the two 0.5 μF 400v. paper condensers to be fitted.

It is also recommended that when a replacement of a vibrator cardridge is necessary and Oak type V6732 be used. As this vibrator has a 32 volt driving coil, it is essential to remove the coil dropping resistor R1. (Refer Vibrator Power Unit Circuit.)

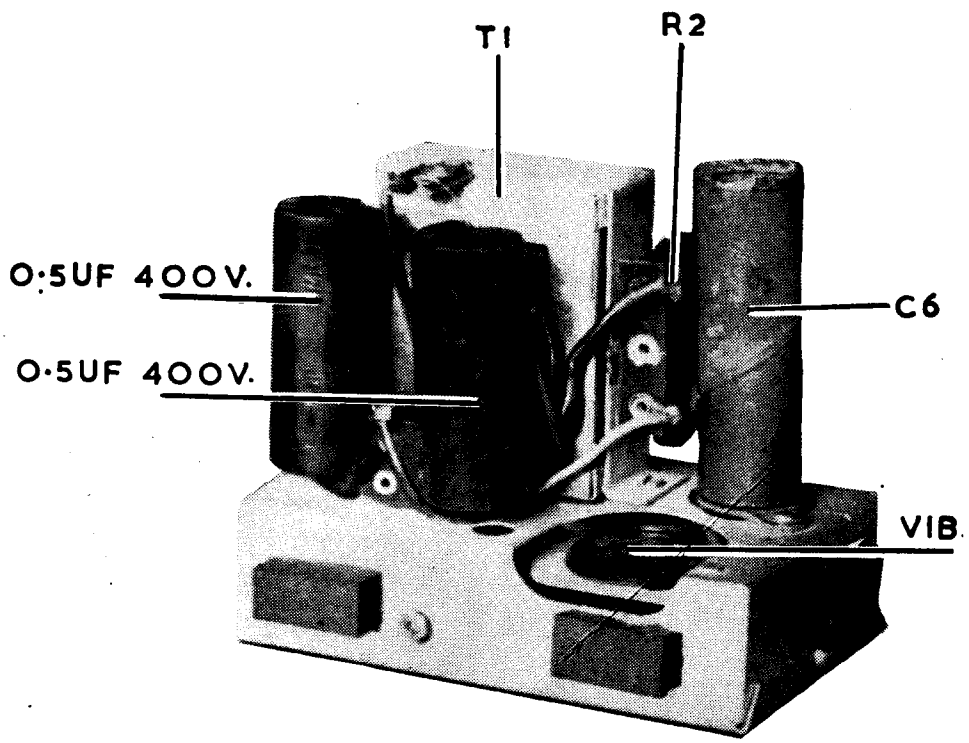

MODIFIED VIBRATOR POWER UNIT No. 24651.

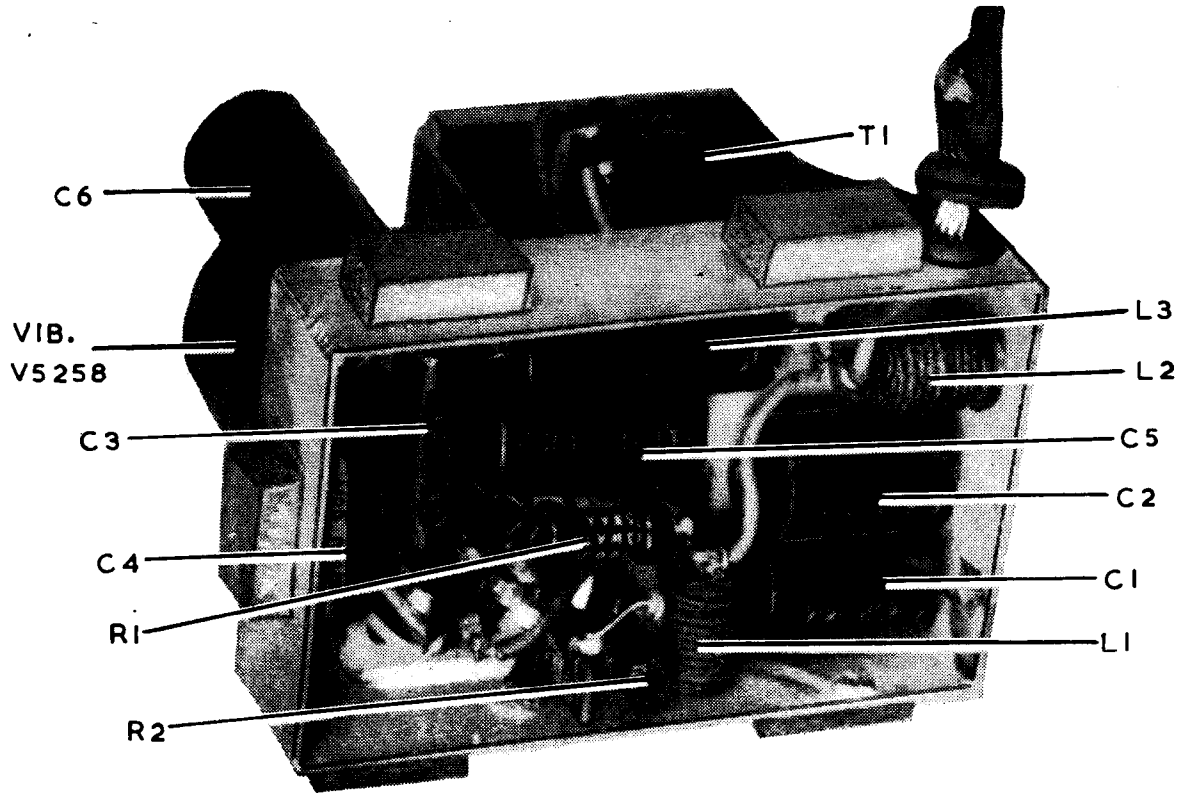

VIBRATOR POWER UNIT No.24651

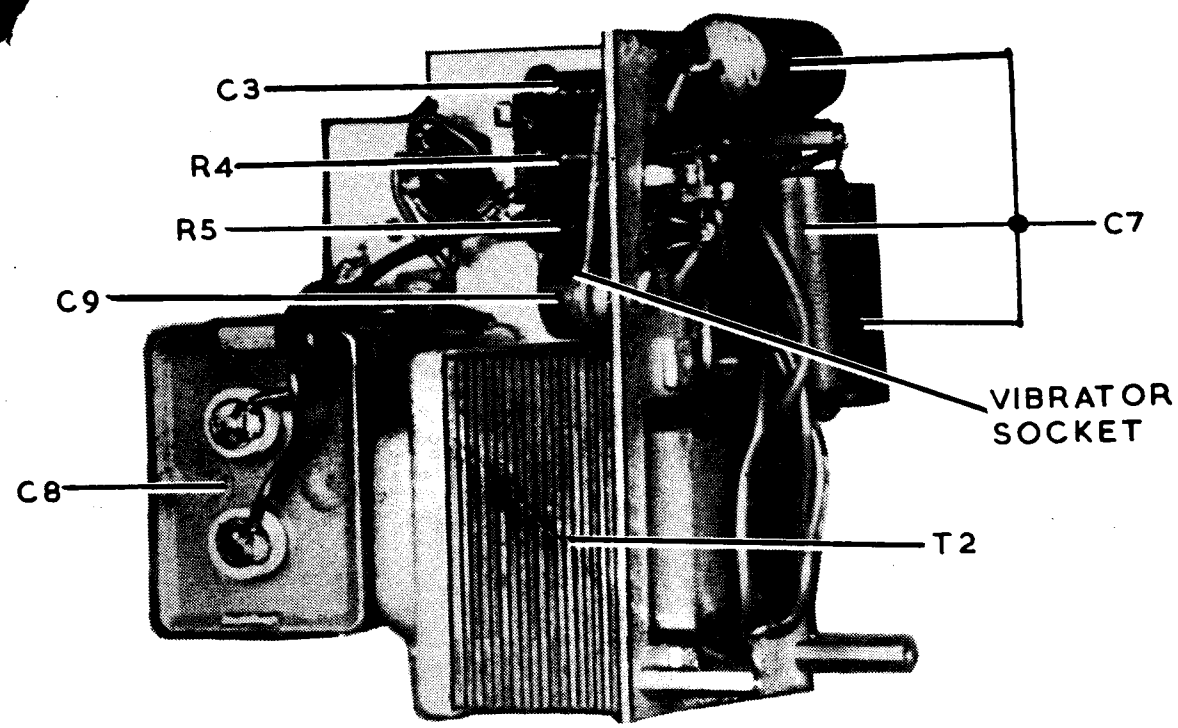

VIBRATOR POWER UNIT No.25380

D.C. RESISTANCE OF WINDINGS.

Winding	D.C. Resistance in ohms
Aerial Coil (M.W.)	
Primary (L1)	16
Secondary (L2)	5
Aerial Coil (S.W.)	
Primary (L6)	4
Secondary (L7)	*
R.F. Coil (M.W.)	
Primary (L3)	50
Secondary (L4)	6
R.F. Coil (S.W.)	
Primary (L8)	5
Secondary (L9)	*
Oscillator Coil (M.W.) (L5)	7
Oscillator Coil (S.W.) (L10)	*
I.F. Transformer Windings	6
R.F. Choke (L15, L17, L18)	*
H.T. Filter Choke (L16)	200
Loudspeaker Input Transformer (T1)	
Primary	345
Secondary	*
Vibrator Power Units No. 24651 & 25380	
R.F. Choke (L1, L2)	*
R.F. Choke (L3)	9
Vibrator Transformer (T1)	
Primary	*
Secondary	180
Vibrator Transformer (T2)	
Primary	5
Secondary	20

The above readings were taken on a standard chassis, but substitution of materials during manufacture may cause variations, and it should not be assumed that a component is faulty if a slightly different reading is obtained.
*Less than 1 ohm.

MECHANICAL REPLACEMENT PARTS.

Item	Part No.
Cabinet, Model 725-C	C86Z
Model 808-G	C82X
Model 808-GZ	C92Y
Cable, Pick-up	24637
Cable, Speaker	19188
Chassis, End. Right-hand	20316
" " Left-hand	24760
Dial Frame Assembly	20343K
Dial, Pointer Assembly	20331
Dial, Scale	25953A
Drum, Drive	15684

Item	Part No.
Knob	4589
Socket, Valve Ass. (miniature)	15919
Socket, Valve Ass. (miniature)	24757
Socket, Valve Ass. (miniature)	25394
Socket, Valve (Octal)	4704
Strip, Tag 1 way	7628
1 way	22945
5 way	9210
7 way	19920
Terminal, Spring	5458

SOCKET VOLTAGES.

	VALVES	Cathode to Chassis Volts	Screen Grid to Chassis Volts	Plate to Chassis Volts	Plate Current mA	Heater Volts*
6BA6	R.F. Amp., M.W.	0.9	65	200	3.3	6.3
	S.W.	0.9	65	200	3.2	6.3
6BE6	Converter, M.W.	—	65	200	1.1	6.3
	S.W.	—	65	200	1.4	6.3
6BA6	I.F. Amp.	1.1	65	200	2.0	6.3
6AV6	Det., A.F. Amp., A.V.C.	0	—	80**	0.5	6.3
6V6GT	Output	9.0	200	190	34	6.3

Total H.T. Current 50 mA.

Measured with Receiver connected to 32 volts D.C. Supply. Volume Control maximum clockwise. Power Switch extreme clockwise. No signal input. Voltmeter 1000 ohms per volt; measurements taken on highest scale giving accurate readable deflection.

Total Input Current: Model 725-C—1.3 amps.
Model 808-G—Radio 1.3 amps., Phono. 2.1 amps.
Model 808-GZ—Radio 1.3 amps., Phono. 1.8 amps.

Model 808-G only—Record hanger Voltage—120 volts A.C. Measured with rectifier type meter.

*These readings are nominal and will vary, due to the Series Heater connections.

**Cannot be measured with an ordinary voltmeter.

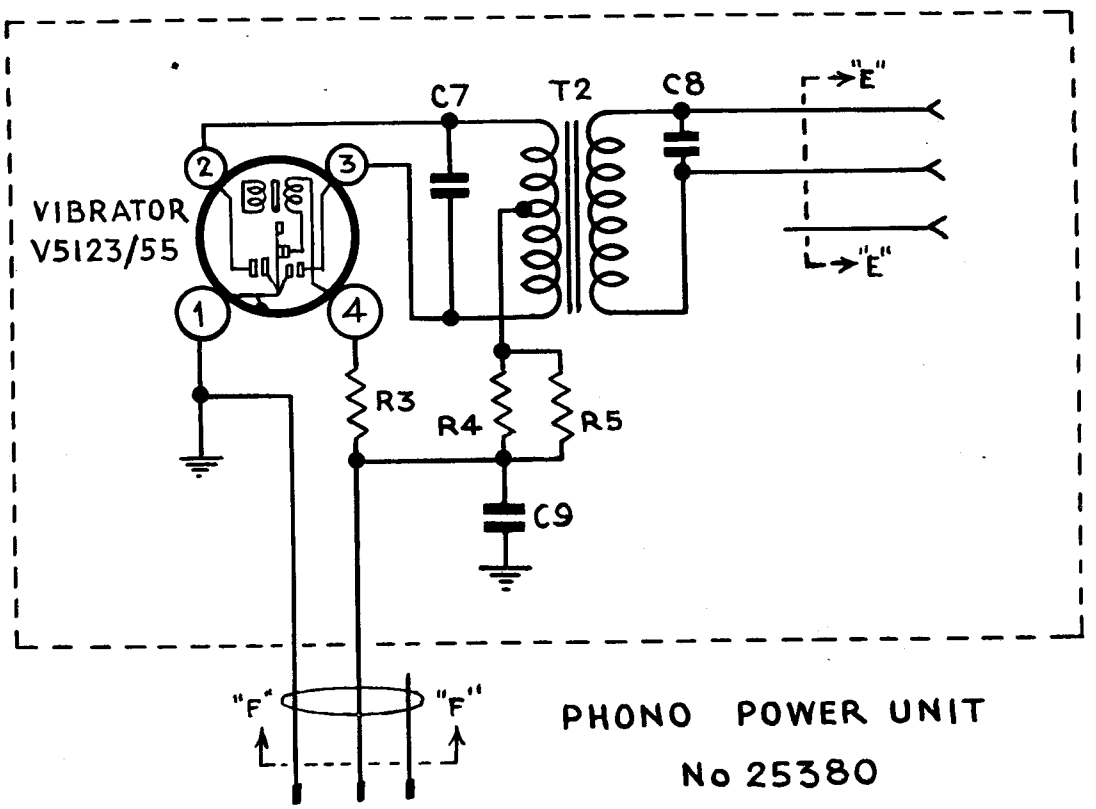

PHONO POWER UNIT
No 25380

CIRCUIT CODE. RADIOLA 725-C & 808-G, 808-GZ.

Code No.	Description	Part No.
	INDUCTORS	
L1, L2	Aerial Coil 540-1600 Kc/s	15454
L3, L4	R.F. Coil 540-1600 Kc/s	24624
L5	Oscillator Coil 540-1600 Kc/s	24626
L6, L7	Aerial Coil 6-18 Mc/s	15456
L8, L9	R.F. Coil 6-18 Mc/s	24624
L10	Oscillator Coil 6-18 Mc/s	24628
L11, L12	1st I.F. Transformer	24622
L13, L14	2nd I.F. Transformer	24622
L15	R.F. Choke	3149
L16	H.T. Filter Choke	15317A
L17	R.F. Choke	3149
L18	R.F. Choke	3149
	RESISTORS	
R1	200 ohms ½ watt	
R2	0.1 megohm ½ watt	
R3	20,000 ohms ½ watt	
R4	100 ohms ½ watt	
R5	0.2 megohm ½ watt (725-C)	
R5	50,000 ohms ½ watt (808-G, 808-GZ)	
R6	50,000 ohms ½ watt (725-C)	
R6	20,000 ohms ½ watt (808-G, 808-GZ)	
R7	12.5 ohms 5 watt	
R8	40 ohms 5 watt	
R9	160 ohms 5 watt	
R10	0.1 megohm ½ watt	
R11	20,000 ohms 1 watt	
R12	400 ohms ½ watt	
R13	13,000 ohms 3 watt	
R14	1.5 megohms ½ watt	
R15	50,000 ohms ½ watt	
R16	0.5 megohm Volume Control	7690
R17	10 megohms ½ watt	
R18	50,000 ohms 1 watt	
R19	0.2 megohm 1 watt	
R20	0.1 megohm ½ watt	
R21	0.1 megohm Tone Control	25378
R22	0.4 megohm ½ watt	
R23	50,000 ohms ½ watt	
R24	250 ohms 3 watt	
R25	5 ohms 25 watt	
	CAPACITORS	
C1	0.1 uF Paper 200 v. Working	
C2	4 uuF Mica	
C3	12-445 uuF Tuning	18638
C4	2-20 uuF Air Trimmer	19659
C5	2-20 uuF Air Trimmer	19659
C6	0.05 uF Paper 200 v. Working	
C7	0.05 uF Paper 200 v. Working	
C8	2-20 uuF Air Trimmer	19659
C9	2-20 uuF Air Trimmer	19659
C10	12-445 uuF Tuning	18638
C11	70 uuF Mica	
C12	9 uuF Mica	
C13	12-445 uuF Tuning	18638
C14	470 uuf Padder ± 2½%	
C15	2-20 uuF Air Trimmer	19659
C16	4000 uuF Padder ± 2½%	
C17	2-20 uuF Air Trimmer	19659
C18	500 uuF Mica (725-C)	
C18	0.005 uF Paper 600 v. Working (808-G, 808-GZ)	
C19	0.02 uF Paper 600 v. Working	
C20	150 uuF Silvered Mica	
C21	150 uuF Silvered Mica	
C22	9 uuF Mica	
C23	0.1 uF Paper 200 v. Working	
C24	8 uF 525 P.V. Electrolytic	
C25	0.1 uF Paper 400 v. Working	
C26	0.5 uF Paper 400 v. Working	
C27	200 uuF Mica	
C28	100 uuF Mica	
C29	0.01 uF Paper 600 v. Working	
C30	100 uuF Mica	
C31	150 uuF Silvered Mica	
C32	150 uuF Silvered Mica	
C33	200 uuF Mica	
C34	0.1 uF Paper 400 v. Working	
C35	16 uF 525 P.V. Electrolytic	
C36	0.005 uF Paper 600 v. Working	
C37	1500 uuF Mica	
C38	0.01 uF Paper 600 v. Working	
C39	25 uF 40 P.V. Electrolytic	
C40	0.05 uF Paper 400 v. Working	
C41	0.005 uF Paper 600 v. Working	
C42	0.1 uF Paper 400 v. Working	
C43	200 uuF Mica	
C44	0.4 uF Paper 200 v. Working	
C45	0.4 uF Paper 200 v. Working	
C46	0.4 uF Paper 200 v. Working	
C47	25 uF 40 P.V. Electrolytic	
	TRANSFORMERS	
T1	Loudspeaker Transformer	TU201
	LOUDSPEAKER	
	12 inch Permanent Magnet	AU55
	SWITCHES	
S1	Phono/Range Switch	24799
S2	Power Switch	25451
	FUSES	
F1	5 amp. Cartridge	
F2	5 amp. Cartridge	

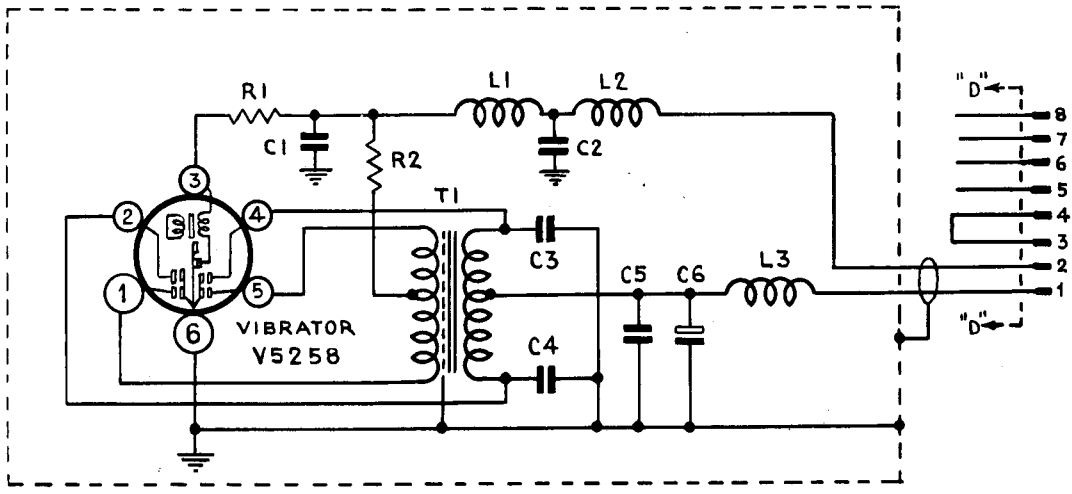

RECEIVER POWER UNIT No 24651

CIRCUIT CODE. RADIOLA VIBRATOR POWER UNITS 24651 & 25380

Code No.	Description	Part No.
	INDUCTORS	
L1	R.F. Choke	22936
L2	R.F. Choke	22936
L3	R.F. Choke	13809
	RESISTORS	
R1	100 ohms 3 watt	
R2	5 ohms 5 watt	
R3	100 ohms 3 watt	
R4	7 ohms 3 watt	
R5	7 ohms 3 watt	
	CAPACITORS	
C1	0.4 uF Paper 200 v. Working	
C2	0.4 uF Paper 200 v. Working	
C3	0.02 uF Paper 600 v. Working	
C4	0.02 uF Paper 600 v. Working	
C5	0.1 uF Paper 400 v. Working	
C6	8 uF 525 P.V. Electrolytic	
C7	1.2 uF Paper 200 v. Working (3 x 0.4 uF, in parallel)	
C8	2 uF Paper 1000 v. Working	
C9	0.4 uF Paper 200 v. Working	
	TRANSFORMERS	
T1	Vibrator Transformer	17894
T2	Vibrator Transformer	25130