LF synthesizer 1mHz-2MHz

PM 5190

9445 051 90001

Instruction manual

9499 453 00502

850815/4/01-14

PHILIPS

Scientific &
Industrial Equipment

PHILIPS

PHILIPS

SERVICE
Scientific & Analytical Equipment
Test & Measuring Instruments
Industrial Controls
Welding
Industrial Data-processing Systems

Scientific & Industrial Equipment Division

PM 5190X

The LF synthesizer PM 5190X is a special version of the PM 5190.
The difference concerns the operating mode, i.e. the setting of the required frequency, AC and DC value.

Alterations of the instruments:

- ENTER key instead of RUB OUT key at the frontplate.
- PROM 334 on unit 2 is marked with the label "VX".
- The indication on the type plate is changed to PM 5190X, 9445 051 90901.

Alterations in the operating mode:

The value selected for FRQ, AC or DC which is indicated on the display will only be executed after pressing the button ENTER.

1. After erasing a display with the corresponding parameter key the previously entered signal is still available at the output. The newly selected parameter value which appears on the display, does not influence the output signal. This situation is indicated by blinking of the frequency dimension LED: This indication is used as well for entered frequency values as for AC and DC values. After pressing the ENTER key the newly selected signal will be executed and the blinking of the frequency dimension LED will stop.

   The transition from the old to the new signal occurs phase-continuously, which serves for convenient operation, especially at low frequencies.

2. If the entered parameter value has to be erased before pressing the ENTER key, then the corresponding parameter key has to be pressed. Then the new value can be entered immediately.

3. If a display is erased by means of the corresponding parameter key, it is still possible by pressing ENTER to have the original value back on the display.

LF synthesizer 1mHz-2MHz

PM 5190

9445 051 90001

Instruction manual

Gerätehandbuch

Mode d'emploi et d'entretien

9499 453 00502

850815/4/01-14

PHILIPS

PHILIPS

C O N T E N T S

OPERATING MANUAL

1. GENERAL

1.1. Introduction E 1-1
1.2. Technical data E 1-2
1.3. Accessories E 1-7
1.4. Operating principle E 1-8

2. INSTALLATION INSTRUCTIONS

2.1. Initial inspection E 2-1
2.2. Safety instructions E 2-1
2.3. Mains voltage setting and fuses E 2-2
2.4. Operating position of the instrument E 2-2
2.5. Dismantling the instrument E 2-2

3. OPERATING INSTRUCTIONS

3.1. Controls and sockets E 3-1
3.2. Operation E 3-3
3.3. IEC bus E 3-9
3.3.1. Introduction E 3-9
3.3.2. Remote operation E 3-10
3.3.3. Programming examples E 3-14
3.3.4. Application examples E 3-20

SERVICE PART

4. CIRCUIT DESCRIPTION

4.1. Oscillator 4-1
4.2. IEC bus interface 4-1
4.3. Control circuit 4-1
4.4. Keyboard and display 4-2
4.5. Digital signal synthesis 4-2
4.6. Digital to analog converter 4-7
4.7. Low-pass filter 4-8
4.8. Square wave generator 4-8
4.9. Square wave pre-amplifier 4-9
4.10. Amplitude modulation 4-9
4.11. Buffer amplifier, amplitude control, compensation 4-9
4.12. DC generator 4-9
4.13. Output amplifier, attenuator 4-10
4.14. Power supply 4-10

5.1.	Cabinet	5-1
5.2.	Pushbuttons	5-1
5.3.	Textplate	5-1
5.4.	Unit 1	5-1
5.5.	Unit 2	5-1
5.6.	Unit 3, Unit 4	5-2
5.7.	Fuse, mains transformer	5-2
6.	CHECK AND ADJUSTMENT	
6.1.	General	6-1
6.2.	Overall functional test	6-1
6.3.	Diagnostic program	6-1
6.4.	Adjustments	6-5
6.5.	Final check and adjustment	6-9
6.6.	Safety inspection and tests after repair and maintenance	6-11
7.	SPARE PARTS	7-1
7.1.	General	7-1
7.2.	Static sensitive components	7-2
7.3.	Handling MOS devices	7-3
7.4.	Parts List	7-3
8.	Figures 30 - 45	
Fig.30	Block diagram	
Fig.31	Front view	
Fig.32	Rear view	
Fig.33	Handle spare parts	
Fig.34	BNC output sockets: spare parts	
Fig.35	Mains cable: spare parts	
Fig.37	Overall circuit diagram	
Fig.38	Unit 3, display p.c.b. lay-out	
Fig.39	Unit 4, keyboard p.c.b. lay-out	
Fig.40	Unit 4, keyboard circuit diagram	
Fig.41	Unit 3, display circuit diagram	
Fig.42	Unit 1, analogue p.c.b. lay-out	
Fig.43	Unit 1, analogue circuit diagram	
Fig.44	Unit 2, digital p.c.b. lay-out	
Fig.45	Unit 2, digital circuit diagram	
9.	CODING SYSTEM OF FAILURE REPORTING FOR QUALITY	
10.	ADDRESSES FOR SALES AND SERVICE	
11.	T + M REPLY CARD	
12.	PROGRAMMING CARD	

1. G E N E R A L

1.1. INTRODUCTION

The LF synthesizer PM 5190 is a versatile high performance signal generator. It produces three wave forms, namely sine wave, square wave or triangular wave form in the frequency range from 1mHz to 2MHz.
The instrument is designed for most professional applications, where a stable signal source is asked for, for development laboratories, including calibration purposes and advanced educational programs.

The frequency settings of the synthesizer are highly accurate due to X-tal controlled generation. All basic signal parameters, i.e. frequency, amplitude, dc offset and wave form are set via keyboard in the local mode of operation. In addition all these parameters are remotely programmable via the built-in IEC bus interface. In local as well as in remote operational mode these parameters are indicated by a bright seven segment LED display in combination with dimension and wave form LED's.

A microprocessor represents the central data processing and control unit of the instrument. It accepts input data from the keyboard or via IEC bus. After diagnosting and processing these data it stimulates the various functional units of the instrument for proper response via assigned I/O ports. In case of incompatible settings the microprocessor initiates the LED display flashing.
A rub-out facility allows fast alteration or correction of keyboard input data.

The inherent signal generation technique of the instrument is called direct digital signal synthesis:
Succeeding digital samples of the signal are computated by a fast processing TTL circuitry and converted to analogue. This technique effects extreme fast responding on alternate frequency settings.

Remote data programming is organized according to the international standard "Interface System for Programmable Measuring Apparatus", called IEC bus. So via the built-in IEC bus interface the PM 5190 cooperates with all Philips and non-Philips IEC bus instruments.

The dc output voltage may be selected separately or whenever used as dc offset voltage added to the output signal.
The generator provides external amplitude modulation facility.
For TTL circuitry testing and stimulating a separate TTL output is available.

All these facilities are built into a compact portable housing. The clearly designed frontpanel and the simplicity of keyboard input as well serve for convenient operating the instrument.

1.2. TECHNICAL DATA

Safety characteristics

This apparatus has been designed and tested in accordance with Safety Class I requirements of IEC Publication 348, Safety Requirements for Electronic Measuring Apparatus, and has been supplied in a safe condition. This manual contains some information and warnings which must be followed by the user to ensure safe operation and to retain the apparatus in a safe condition.

Performance characteristics, specifications

Properties expressed in numerical values with stated tolerance are guaranteed by the manufacturer. Specified non-tolerance numerical values indicate those that could be nominally expected from the mean of a range of identical instruments.
This specification is valid after the instrument has warmed up for 30 minutes (reference temperature 23°C).
If not stated otherwise, relative or absolute tolerances relate to the set value.

1.2.1. Frequency

nominal range	1 mHz - 2 MHz
measuring range	0.001 Hz - 2146 kHz for sine wave, square wave 0.001 Hz - < 100 kHz for triangular wave
setting	local : via front panel keyboard remote: via IEC bus interface
resolution	6 digits
display	6-digit 7-segment LED display 6 decimal points 2 LEDs for dimension Hz, kHz
setting error	$\pm 1 \times 10^{-6}$ at 23°C
temperature coefficient	$< 1 \times 10^{-6}$/K
aging	$< 1.5 \times 10^{-6}$ per year

1.2.2. Wave forms

selectable wave forms	sine wave, square wave, triangular wave, all time-symmetrical, all with or without dc offset; dc voltage without ac,
selection	local : via front panel keyboard remote: via IEC bus interface
indication	LEDs for the selected wave form

Sine wave

total harmonic distortion	< 0.4% for frequencies 1 mHz to 50 kHz < 1.5% for frequencies 50 kHz to 2 MHz
non-harmonic components	< -46 dB at max. amplitude
phase noise	< -50 dB within 30 kHz bands, centered to the output frequency; (frequencies > 50 kHz)

Square wave

duty cycle	50%
- tolerance	< 0.5% (f=1 kHz)

		ampl. settings	
rise time, fall time	< 50 ns	04.0 - 19.9 V	termin.
tilt	< 3 % (f < 100 kHz)	0.40 - 1.99 V	50 Ohms
overshoot	< 3%	.004 - .199 V	

Triangular wave

frequency range	1 mHz - < 100 kHz
linearity error	< 1% for frequencies < 10 kHz

1.2.3. Modulation

mode	amplitude modulation, external
mode indication	LED
carrier	
- wave form	sine wave, triangular wave
- frequency	> 10 Hz
modulation frequency	dc...20 kHz
modulation coefficient	0.1 V /10% AM
modulation depth	0...90%
connection	BNC input socket AM EXT, rear side
- input impedance	20 kOhm
- max. external voltage	±30 V
- reference potential	external contact of BNC socket

1.2.4. Output

connection	BNC socket
impedance	50 Ohm, ±2%
load capability	short-circuit proof
max. external voltage	±15 V
reference potential	external contact of BNC socket

AC voltage

amplitude range	0 - 19.9 Vac,pp, open circuit
sub-ranges I	.000 - .199 Vac
II	0.00 - 1.99 Vac
III	00.0 - 19.9 Vac
minimum increments	1 mV in sub-range I 10 mV in sub-range II 0.1 V in sub-range III
setting	local : via front panel keyboard remote: via IEC bus interface
resolution	2 1/2 digits
display	2 1/2-digit 7-segment LED display 3 decimal points
setting error	±3% for settings 02.0 V < ac < 19.9 V for frequencies < 100 kHz +3%/-6% for settings 02.0 V < ac < 19.9 V for frequencies > 100 kHz
temperature coefficient	< 0.1%/K

DC offset voltage

dc voltage range	0 - 9.9 Vdc, open circuit
sub-ranges I	.000 - .099 Vdc
II	0.00 - 0.99 Vdc
III	00.0 - 09.9 Vdc
sub-range selection	determined by ac sub-range setting
minimum increments	1 mV in sub-range I 10 mV in sub-range II 0.1 V in sub-range III
polarity	positive or negative polarity
setting	local : via front panel keyboard remote: via IEC bus interface
resolution	2 digits

display	polarity +/- 2-digit 7-segment LED display 3 decimal points, position determined by ac decimal point setting
setting error	±4% from 10% to 100% of each sub-range
temperature coefficient	< 0.1%/K from 10% to 100% of each sub-range
max. dc voltage setting	depending on ac voltage setting: dc indication ≤ 100 - (ac indication)/2; decimal points ignored

1.2.5. TTL output

connection	BNC socket TTL OUT
duty cycle	50%
fan out	10 TTL inputs
level	standard TTL level: high > 2.4 V low < 0.8 V
external voltage	not proof against external voltage > 5 V

1.2.6. Out-of-range indication

display flashes, if	- frequency setting > 2146 kHz - frequency setting ≥ 100 kHz for ∿ - frequency resolution < 1 mHz - dc voltage exceeds the max. dc voltage setting

1.2.7. Remote control

conformity	IEC-625: Interface System of Programmable Measuring Apparatus
interface - input/output system - input/output code - input/output levels	built-in IEC bus interface bit parallel - character serial ISO-7 bit code (similar to ASCII) L = -0.5 V...+0.8 V H = +2.0 V...+5.5 V
remote state indication	front panel LED

programmable parameters	- frequency - ac voltage - dc voltage - wave form
response time (between ETX and signal execution)	7 ms for frequency 10 ms for ac voltage 12 ms for dc voltage 4 ms for wave form
interface functions	- AH1 : acceptor handshake, complete - L2 : basic listener - RL1 : remote-local capability, no local lock-out

programming example:

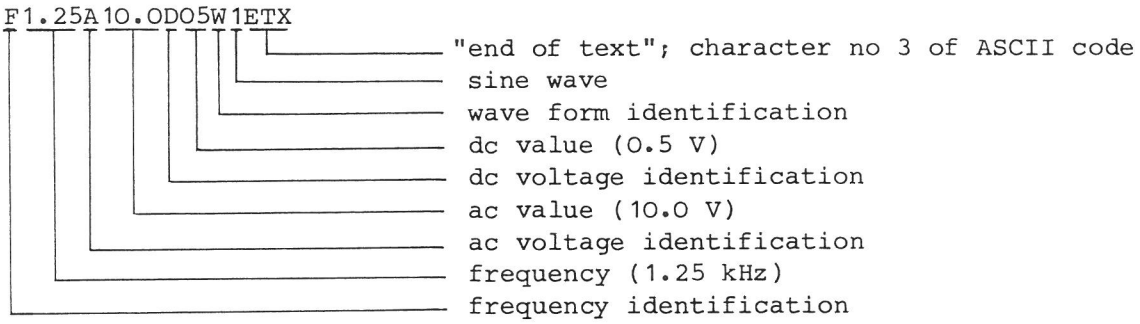

connection	25-pole standard interface connector, rear side
max. external voltage	-0.5 V/+5.5 V
reference potential	measuring earth
connector housing	connected to protective conductor

1.2.8. Power supply — ac mains

nominal values	110 V/128 V/220 V/238 V, selectable by solder links
nominal operating range	±10% of selected nominal value
operating limits	±10% of selected nominal value
nominal frequency range	50 - 60 Hz
- tolerance	±5% of nominal frequency range
power consumption	59 VA

1.2.9. Environmental conditions

The following environmental data are only valid if the instrument is checked in accordance with the official checking procedure. Details on these procedures and failure criteria are supplied on request by the PHILIPS organization in your country or by PHILIPS INTERNATIONAL B.V., SCIENTIFIC & INDUSTRIAL EQUIPMENT DIVISION, EINDHOVEN, THE NETHERLANDS.

ambient temperature	
- reference value	+23 °C ±1 °C
- nominal range	+ 5 °C...+40 °C
- limits for storage and transportation	-40 °C...+70 °C
relative humidity	
- reference range	45...75%
- nominal working range	20...80%
air pressure	
- reference value	1013 mbar (≙760 mm Hg)
- nominal working range	800...1066 mbar (up to 2200 m height)
air speed	
- reference value	0...0.2 m/s
- nominal working range	0...0.5 m/s
radio interference voltage	level of interference < K
operating position	normally upright on feet or with handle fold down
warm-up time	30 min.

1.2.10. Cabinet

protection type	IP 20 (see DIN 40 050)
protection class	class I, protective conductor (see IEC 348)
overall dimensions	
- height	140 mm
- width	310 mm
- depth	365 mm
weight	approx. 6.1 kg

1.3. ACCESSORIES

1.3.1. Standard

instruction manual, incl. programming card, fuse 630 mA delayed

1.3.2. Optional

PM 9075, coaxial cable BNC-BNC
PM 9585, termination 50 Ohm/1 W
PM 9480, IEC bus cable (length 1m)
PM 9481, IEC bus cable (" 2m)
PM 9482, IEC bus cable (" 4m)
PM 9483, IEC/IEEE cable adaptor (1m)
Test-PROM
Book: "digital instrument course, part 4: IEC bus interface"

1.4. OPERATING PRINCIPLE

The block diagram of the PM 5190 is shown in fig.30. The data input circuitry, IEC bus interface, keyboard and display with their data and control connections to the controlling micro-processor and the program memory are depicted in the upper part.
The adjusted parameters are transmitted with the aid of the IEC bus or keyboard interface components to the micro-processor, which then carries out the necessary adjustments of the I/O expanders (static control signals).
In detail, the following circuit blocks are controlled:

- generator (synthesizer) with: accumulator, complementer 1+2, sine/triangle selector, sine ROM
- analog element with: DAC, low-pass filter, square wave generator, amplitude modulator, switching array
- dc-generator
- ac amplitude control
- output amplifier unit (output amplifier, attenuator)

The triangle and sine signal is generated as a binary sequence of numbers. The conversion of the binary sequence of numbers in stepped sine or triangle signals is effected in the 9 bit DAC. The following lowpass filter suppresses the alias frequencies, smoothes the signal and thus generates equidistant zero pauses within the sine signal. In the square wave generator, a time-symmetrical square wave signal is generated.
The amplitude modulation can be joined up into the sine/triangle signal path.
Thus 5 functions can be chosen: sine, square, triangle, AM sine and AM triangle.

Via a buffer amplifier, (buffer 2), the signal is applied to the 8 bit binary controlled amplitude control and further to the output amplifier. Its input is a virtual zero point at zero potential. The signal current and the current of the 8 bit controlled current of the dc-generator flow within this virtual zero point. Thus three modes of operation are possible: ac mode, ac + dc mode, and dc mode. The signal flows via the 0/20/40 dB attenuator to the output socket.

All clock frequencies needed are derived from a crystal stabilized master frequency in the clock pulse generator.
The power supply delivers +20 V and -20 V and two seperate +5 V voltages. This seperation diminishes coupling of the digital interference noise into the analogous circuitries.

2. INSTALLATION INSTRUCTIONS

2.1. INITIAL INSPECTION

Check the contents of the shipment for completeness and note whether any damage has occurred during transport. If the contents are incomplete, or there is damage, a claim should be filed with the carrier immediately, and the Philips Sales or Service organisation should be notified in order to facilitate the repair or replacement of the instrument.

2.2. SAFETY INSTRUCTIONS

Upon delivery from the factory the instrument complies with the required safety regulations, see para. 1.2. To maintain this condition and to ensure safe operation, the instructions below must carefully be followed.

2.2.1. Maintenance and repair

Failure and excessive stress:
If the instrument is suspected of being unsafe, take it out of operation permanently.
This is the case when the instrument
- shows physical damage
- does not function anymore
- is stressed beyond the tolerable limits (e.g. during storage and transportation)

Dismantling the instrument: When removing covers or other parts by means of tools, live parts or terminals could be exposed. Before opening the instrument, disconnect it from all power sources.

If the **open live instrument needs calibration, maintenance or repair,** it must be performed only by trained personnel being aware of the risks. After disconnection from all power sources, the capacitors in the instrument may remain charged for some seconds.

2.2.2. Earthing (grounding)

Before any other connection is made the instrument shall be connected to a protective earth conductor via the three-core mains cable. The mains plug shall be inserted only into a socket outlet provided with a protective earth contact. The protective action shall not be negated by the use of an extension cord without protective conductor.
The external contacts of the BNC sockets must not be used to connect a protective conductor.

WARNING:	Any interruption of the protective conductor inside or outside the instrument, or disconnection of the protective earth terminal, is likely to make the instrument dangerous. Intentional interruption is prohibited.

The circuit earth potential applied to the external contacts of the BNC sockets is connected to the cabinet. The external contacts of the BNC sockets must not be used to connect a protective conductor.

2.2.3. Connections

The circuit earth potential is applied to the external contacts of the BNC sockets and is connected to the cabinet by means of parallel-connected capacitor and resistor. By this means hum loops are avoided and a clear HF earthing is obtained.
If the circuit earth potential in a measurement set-up is different from the protective earth potential, it must be noticed,
- that the BNC sockets can be touched and that it must not be live, see the safety regulations on the subject (VDE 0411),
- that all sockets marked with the sign ⊥ are internally interconnected.

2.2.4. Mains voltage setting and fuses

Before inserting the mains plug into the mains socket, make sure that the instrument is set to the local mains voltage.
The instrument shall be set to the local mains voltage only by a qualified person who is aware of the hazard involved.

WARNING:	If the mains plug has to be adapted to the local situation, such adaption should be done by a qualified person only.

Make sure that only fuses of the required current rating, and of the specified type, are used for renewal. The use of repaired fuses, and/or the short-circuiting of fuse holders, are prohibited.
The fuse shall be renewed only by a qualified person who is aware of the hazard involved.

WARNING:	The instrument shall be disconnected from all voltage sources when a fuse is to be renewed, or when the instrument is to be adapted to a different mains voltage.

2.3. MAINS VOLTAGE SETTING AND FUSES

The safety instructions in chapter 2.2.4. must be followed.

On delivery from the factory the instrument is set to 220 V.
If the instrument is to be used on a different supply voltage proceed as follows:

- Unplug the mains connector
- Fold up the handle to the top.
  For this push the buttons of the handle.
- Loosen the central screw at the rear
- Dismantle the cabinet
- Change the solder links
  according to the connection diagram on the bottom side of the instrument

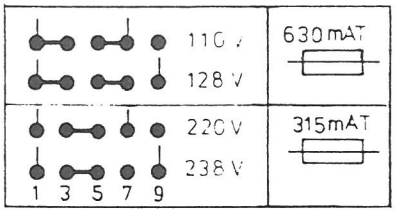

- If necessary, insert the supplied fuse 630 mA delayed into the fuse holder instead of the fuse built-in
- Change the mains voltage plate at the rear of the instrument in accordance with the mains voltage selected. The plates for the other supply voltages are inserted into a plastic cover, as the fuse just mentioned.
- Close the instrument

2.4. OPERATING POSITION OF THE INSTRUMENT

The instrument may be used in the positions indicated in clause 1.2.9. With the handle folded down, the instrument may be used in a sloping position; for this push the buttons of the handle. The characteristics mentioned in Section 1.2. are guaranteed for the specified positions.
Ensure that the ventilation holes in the cover are free of obstruction.
Do not position the instrument on any surface which produces or radiates heat, or in direct sunlight.

2.5. DISMANTLING THE INSTRUMENT

- Unplug the mains connector
- Fold up the handle to the top. For this push the buttons of the handle
- Loosen the central screw at the rear
- Dismantle the cabinet

3. O P E R A T I N G I N S T R U C T I O N S

3.1. CONTROLS AND SOCKETS (Fig.31, 32)

legend	function
POWER o ON ● OFF	mains switch: white dot for ON position
	pushbuttons for the required wave form, LED indication of the selected wave form:
⊗ [~]	sine wave
⊗ [⊓]	square wave
⊗ [⋀]	triangular wave
⊗ [AM EXT]	pushbutton and LED indication for selection of external amplitude modulation
[FRQ]	pushbutton for preparation of frequency settings
[Hz kHz]	pushbutton for selecting the frequency range .001 Hz - 999999 Hz .000001 kHz - 2146 kHz
[AC]	pushbutton for preparation of signal output voltage settings
[DC]	pushbutton for preparation of DC (offset) voltage settings
[+/-]	pushbutton for positive or negative DC voltage
[7] [8] [9] [4] [5] [6] [1] [2] [3] [0] [.]	keyboard (pushbuttons) for setting the - frequency - AC output voltage - DC (offset) voltage
[RUB OUT]	pushbutton for alteration or correction of last keyboard input data

legend	function
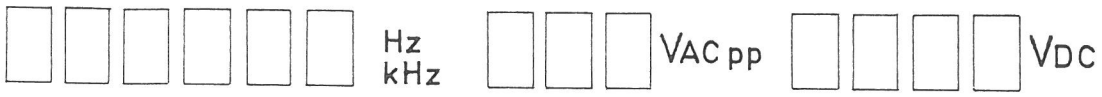	display for indication of the set - frequency .X.X.X.X.X.X - AC output voltage .X.X.X - DC (offset) voltage .X.X.X
OUTPUT	BNC output socket for the signal
TTL OUT	BNC output socket for the TTL signal
AM EXT (rear side)	BNC input socket for the external amplitude modulation voltage
IEC BUS (rear side)	standard 25-pole IEC bus connector for remote operation of the instrument
⊗ REMOTE	LED indication for remote operation

3.2. OPERATION

3.2.1. Switching on the instrument

After the instrument has been connected to the mains in accordance with the paras. 2.3. and 2.4., it can be switched on by pressing the mains switch POWER. The white spot inside the POWER switch mechanically indicates that the instrument is switched on.
When switching on, the instrument is set to initial state, which is defined by

- no frequency generation
- no output voltage
- the display showing 000000 Hz .000 V ACpp +.000 V DC
  and indicated sine wave: ⊗ ∼

KEYBOARD INPUT

3.2.2. Setting the required output wave form

The following wave forms may be selected:

- sine wave
- square wave
- triangular wave

and in combination with the external modulation facility

- sine wave / AM EXT
- triangular wave / AM EXT.

The active wave form is indicated by LED's assigned to the pushbuttons.
If you previously selected the square wave signal, the AM EXT button is inhibited.
If you previously chose ∼ /AM EXT or ⩘ /AM EXT, and you select the square wave, the AM EXT function is switched off.
The modulating voltage must be fed in via the BNC connector at the rear side.

3.2.3. Setting the frequency

Choose the convenient frequency range by means of the alternately reacting button Hz/kHz; the range is indicated by LED's:

Hz for the range .001 Hz - 999999 Hz
kHz for the range .000001 kHz - 2146 kHz

For triangular wave form the upper frequency limit is 99.9999 kHz.

Push the button FRQ

The signal generator is set to the initial state, which is defined as follows:

- the frequency display section is blanked
- the output frequency is zero
- the output amplitude is zero
- the frequency section is prepared for frequency settings via the numerical part of the keyboard

The 6 digit display has left entry.
The output frequency immediately follows the state of the display.
The decimal point can be set at any position: .X.X.X.X.X.X
If you set a d.p. behind the 6th digit, it will not be accepted.
If a d.p. was set and you give in a second d.p. at a different position, this second action is accepted, while the first d.p. is blanked.
Trailing zeroes behind a d.p. may be left out, because they have no effect on the generated frequency.

It is up to you to make the choice of setting the frequency into different display positions, depending on convenient data entry.
1 Hz e.g. may be set as follows:

```
1          Hz
01         Hz
.
.
000001     Hz
1.         Hz
.
.
0000 1.    Hz
.001     kHz
.
.
000.001 kHz
etc.
```

For all these settings the same frequency accuracy results.

Out-of-range indication:

If you choose a setting exceeding the permitted ranges or resolution the display starts flashing.

e.g. .0001 Hz ∼/⊓⊔/∼
2147 kHz ∼/⊓⊔/∼
100 kHz ∼
1.0001 Hz

Rub out facility

If you set a wrong figure or decimal point, you have two possibilities to correct them:

1. Push the FRQ key and start setting the data once more.
2. Push the RUB OUT key. By doing this the last digit keyed in is blanked. Repeated pushing the RUB OUT key continues blanking the figures from right to the left until the whole display field is blanked.

Remark: Changing from Hz to kHz and vice versa is possible without any RUB OUT action or without preparing the frequency setting by FRQ.

3.2.4. Setting the signal output voltage Vacpp, setting the dc (offset) voltage Vdc

Push the button AC.
The analogue output circuitry of the generator is set to the initial state being defined as follows:

- the output voltage is zero
- the ac display is blanked
- the dc display is set to 000
- the decimal points are set in front of the first digit for ac as well as for dc
- the amplitude control and attenuator section of the instrument and their display fields are prepared to accept settings via the numerical part of the keyboard

The maximum ac voltage is 19.9 Vac : so 2 1/2 digits can be set.
Therefore the 1st digit must be 0 or 1. If you push a numeric > 1,
- it is placed in the 2nd digit
- the 1st digit will be automatically set to 0
- the decimal point is shifted: 0.X

As stated for the frequency generation, the ac output voltage immediately follows the display status.

Shifting a decimal point
If you want a decimal point be shifted to the right, key in the d.p. behind the set digit; the old d.p. will be blanked. A d.p. behind the 3rd digit will not be accepted.

Alteration of ac settings may be done by pushing the AC key once more or by RUB OUT action. The effect of pushing the RUB OUT key conforms to the actions of frequency rub-out, except the decimal point: Erasing a digit with decimal point postponed causes the d.p. to be shifted one digit to the left. So in any case one d.p. is set in the ac display.

Setting the dc voltage

A dc output voltage may be selected separately or whenever used as dc offset voltage be added to the ac output signal.

Note: It is not possible to set a dc voltage without having previously set the ac value.

Push the button DC.
The dc generator is set to the initial state, which is defined as follows:
- the dc voltage is zero
- the first digit of the display remains being 0, the further two digits are blanked
- the decimal point is always fixed to the same position as in the ac display
- the internal dc generator and the assigned display field are prepared for settings via the numerical part including d.p. of the keyboard.

2 digits can be set. The maximum dc voltage is 9.9 Vdc, but is restricted with regards to the ac settings, see chapter "out-of-range indication" below.

As stated for the frequency and ac section, the dc generator output voltage immediately follows the display status, i.e. the single keyboard settings.

Positive or negative dc voltage can quickly be changed by pushing the +/-key; the changing is alternately. It can be done at any time without pushing DC before.

Alterations of dc settings may be executed by pushing the DC key or RUB OUT key, the actions of which you are aquainted to out of the frequency and ac operating part.
But note: After completion of keying in the ac and dc data alterations or correction of the ac setting can only be achieved by AC key action, which besides of blanking the ac field resets the dc display too!

Out-of-range indication

The maximum dc offset voltage depends on the ac settings in order to prevent overdriving the output amplifier:

dc indication $\leq$ 100 - ac indication/2;
decimal points ignored.

If your dc setting exceeds this limitation, the display starts flashing.

Examples:

Vac	Vdc	
	permitted	not permitted
10.	05.	05.1
19.9	00.0	00.1
19.8	00.1	00.2
00.3	09.8	09.9
1.19	0.04	0.05

3.2.5. Amplitude modulation

Two carrier wave forms can be selected:

- sine wave
- triangular wave

The actual wave form is indicated by LED's assigned to the pushbuttons.

If you selected the square wave signal, the AM EXT button is inhibited. If you previously chose ∿/AM EXT or ⩘/AM EXT, and you select the square wave, the AM EXT function is switched off.

The modulating voltage must be fed in via the BNC connector at the rear side.

Note:

The carrier amplitude pp is 1/2 of the indicated Vacpp.
So, when adjusting the carrier amplitude set the displayed value twice the effective amplitude!

3.3. IEC BUS

3.3.1. Introduction to the IEC interface bus

More and more measuring instruments are being used in systems designed for the automatic monitoring of some process or performance of multi-function measurements with a number of instruments.
These instruments may be listeners and (or) talkers which depends on the function of the instrument. Switching to listen or talk mode is done by means of a controller which is the head of a system and which is able to address the other instruments as talkers or listeners.
For more complex systems a special controller may be needed, while smaller systems can sometimes use controller functions built into one of the instruments.
Now such a system obviously requires some means of interconnection between the different units; this is the interface system. To ensure that all instruments can communicate, international agreements have been reached concerning the characteristics of such an interface system. These are laid down in an IEC document entitled "The IEC interface system for programmable measuring apparatus".

What is the purpose of the IEC interface?

All instruments provided with facilities for the IEC bus interface can be used together in a system, no matter where they were made or who made them.
Users can thus select the instruments that meet their needs best, and combine them in a system, without having to worry about making a special interface.

The IEC bus

The IEC bus is a bus-line system with 16 parallel lines. Eight of these are combined in the "data bus", which is used for the transfer of measuring data, addresses and programming data. Three lines are used for the "data-byte tranfer control"; (direct communication between a talker and one or more listeners). The remaining 5 lines are for general interface-management messages (communication between the control element and the other devices). Up to 15 instruments can be interconnected by an IEC bus system. This is limited by the maximum bus-load that can be driven. The maximum number of instruments to be addressed is 31 (5 bits for selecting the device-address). These may be talkers and (or) listeners. Each instrument has its own coded address, while a dual-function instrument (one that can function both as talker and a listener) has both a talker address and a listener address. As we have already mentioned, at a given moment only one instrument can be addressed as talker but several as listener.

Talk - listen - control

In a well organized meeting, people talk one at a time, while the rest listen to what is of interest for them. The chairman decides who should do the talking at a given moment. The communication between the instruments in a system is organized in a similar way (but more strictly than in a meeting). The control element plays the role of the chairman here; of course in order to do this job properly, it must itself be a talker part of the time and a listener the rest of the time. The other instruments will be talkers or listeners, as dicided by the control element. For example:

- A programmable DVM must be able to listen (to receive programming data) and to talk (to supply measuring data).
- A pulse generator can only listen (receive programming data).
- A tape reader can only be able to talk.

The control element must be able to control, talk and listen.

3.3.2. Remote operation of PM 5190

The LF synthesizer can be remotely controlled via the built-in IEC bus interface. Instruments provided with this facility can be used together in a system, no matter where they were made or who made them. Users can thus select the instruments that meet their needs best, and combine them into automated test and measuring systems without having to worry about making a special interface.

3.3.2.1 Interface functions of the PM 5190

Out of a set of operating capabilities each IEC bus instrument has its assigned interface function. For PM 5190 the following functions are valid:

- AH1: Acceptor Handshake interface function, complete:
the acceptor handshake function provides the instrument with the capability to guarantee proper reception of remote multiline messages.

- L2: basic Listener interface function:
the listener function provides the instrument with the capability to receive data via the interface from other devices.

- RL1: Remote/Local interface function; no local lock-out:
the remote/local function provides the instrument with the capability to select between two sources of input information, either via front panel control (local) or via the interface (remote). "No local lock-out" means that the instrument, once being addressed via the IEC bus, cannot directly be switched over to keyboard input again. Keyboard actions will only be accepted after the controller has sent the GO TO LOCAL command, see next chapter and table of the ASCII code.

3.3.2.2 Addressing the instrument

In order to coordinate all devices connected onto the bus system, each instrument must have its individual address for identification. When a controller e.g. sets an address on the bus lines, all instruments compare the address with their own and the one that finds both to be the same reacts.

Addressing of IEC-bus instruments is achieved by a special bit pattern together with ATN being sent from a controller. Bit 1 to bit 5 of this pattern are selectable by means of switches, the decimal value of these five bits represents the device address in the table fig. 2. If, for instance, the device-address 4 (= 00100 binaray value) is set by means of the five switches, the instrument can be addressed by sending the address 4 from a controller. If it is necessary to send the ASCII-code of the listener-address, the symbol '$' must be sent to address the PM 5190 as a listener.
The device-address 31 (= ASCII character '?') connot be used since it is reserved for the de-addressing command 'unlisten'.

On delivery the instrument is set to the address 4: (switches are set to 00100). This device address can be changed. For this 5 switches on the conductor side of the digital printed circuit board, unit 2, are accessible from the rear bottom part of the instrument (see fig.1). It is not necessary to remove the cabinet.

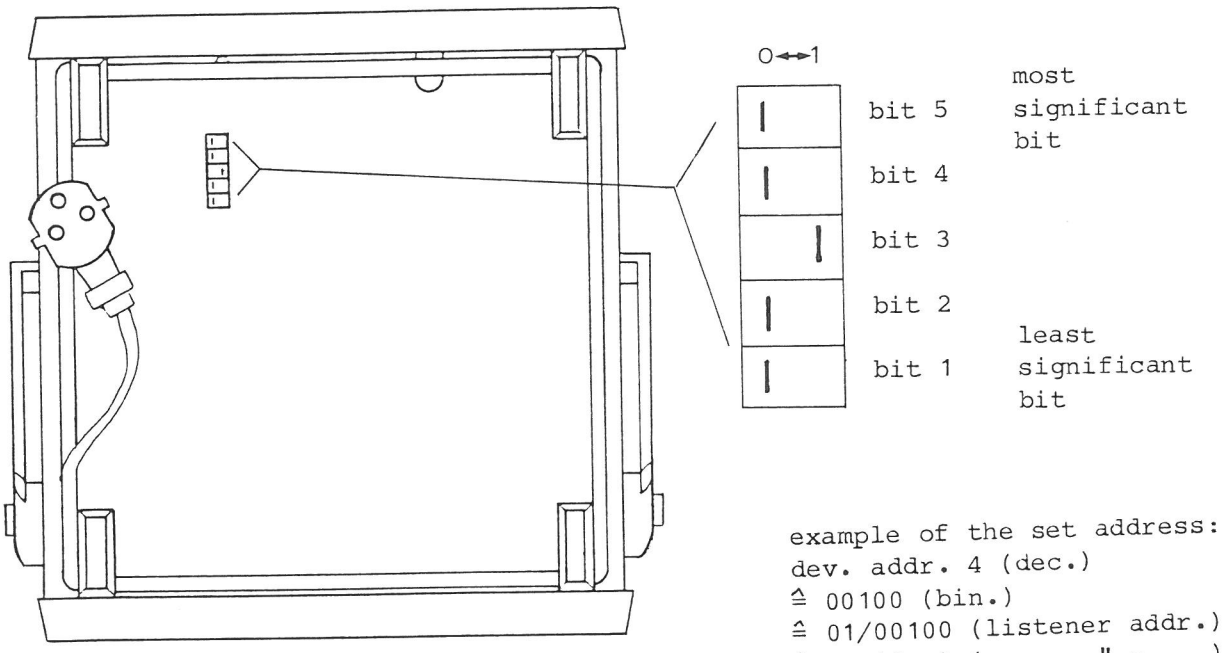

Fig.1 Addressing the instrument (bottom view)

When the address set on the bus by a controller is identical to this internal address, the instrument reacts and changes from keyboard input ("local" state) to IEC bus input ("remote" state). The remote state is indicated by a LED at the front panel. The synthesizer then will accept messages from the bus and will not react on keyboard inputs. The latter will only be possible again after the controller has sent the GTL (go to local) command, value 1 (binary 0000 0001) of the ASCII code, SOH (start of heading), which is interpreted as GTL on the IEC bus.

LISTENER ADDRESSES										TALKER ADDRESSES										DEVICE ADDRESSES
ASCII CHAR	DECIMAL VALUE	DIO BUS								ASCII CHAR	DECIMAL VALUE	DIO BUS								
		8	7	6	5	4	3	2	1			8	7	6	5	4	3	2	1	
SP	32	0	0	1	0	0	0	0	0	@	64	0	1	0	0	0	0	0	0	0
!	33	0	0	1	0	0	0	0	1	A	65	0	1	0	0	0	0	0	1	1
"	34	0	0	1	0	0	0	1	0	B	66	0	1	0	0	0	0	1	0	2
#	35	0	0	1	0	0	0	1	1	C	67	0	1	0	0	0	0	1	1	3
$	36	0	0	1	0	0	1	0	0	D	68	0	1	0	0	0	1	0	0	4
%	37	0	0	1	0	0	1	0	1	E	69	0	1	0	0	0	1	0	1	5
&	38	0	0	1	0	0	1	1	0	F	70	0	1	0	0	0	1	1	0	6
'	39	0	0	1	0	0	1	1	1	G	71	0	1	0	0	0	1	1	1	7
(	40	0	0	1	0	1	0	0	0	H	72	0	1	0	0	1	0	0	0	8
)	41	0	0	1	0	1	0	0	1	I	73	0	1	0	0	1	0	0	1	9
*	42	0	0	1	0	1	0	1	0	J	74	0	1	0	0	1	0	1	0	10
+	43	0	0	1	0	1	0	1	1	K	75	0	1	0	0	1	0	1	1	11
,	44	0	0	1	0	1	1	0	0	L	76	0	1	0	0	1	1	0	0	12
-	45	0	0	1	0	1	1	0	1	M	77	0	1	0	0	1	1	0	1	13
.	46	0	0	1	0	1	1	1	0	N	78	0	1	0	0	1	1	1	0	14
/	47	0	0	1	0	1	1	1	1	O	79	0	1	0	0	1	1	1	1	15
0	48	0	0	1	1	0	0	0	0	P	80	0	1	0	1	0	0	0	0	16
1	49	0	0	1	1	0	0	0	1	Q	81	0	1	0	1	0	0	0	1	17
2	50	0	0	1	1	0	0	1	0	R	82	0	1	0	1	0	0	1	0	18
3	51	0	0	1	1	0	0	1	1	S	83	0	1	0	1	0	0	1	1	19
4	52	0	0	1	1	0	1	0	0	T	84	0	1	0	1	0	1	0	0	20
5	53	0	0	1	1	0	1	0	1	U	85	0	1	0	1	0	1	0	1	21
6	54	0	0	1	1	0	1	1	0	V	86	0	1	0	1	0	1	1	0	22
7	55	0	0	1	1	0	1	1	1	W	87	0	1	0	1	0	1	1	1	23
8	56	0	0	1	1	1	0	0	0	X	88	0	1	0	1	1	0	0	0	24
9	57	0	0	1	1	1	0	0	1	Y	89	0	1	0	1	1	0	0	1	25
:	58	0	0	1	1	1	0	1	0	Z	90	0	1	0	1	1	0	1	0	26
;	59	0	0	1	1	1	0	1	1	[	91	0	1	0	1	1	0	1	1	27
<	60	0	0	1	1	1	1	0	0	\	92	0	1	0	1	1	1	0	0	28
=	61	0	0	1	1	1	1	0	1	]	93	0	1	0	1	1	1	0	1	29
>	62	0	0	1	1	1	1	1	0	^	94	0	1	0	1	1	1	1	0	30
?	63	0	0	1	1	1	1	1	1	_	95	0	1	0	1	1	1	1	1	UNLISTEN UNTALK

Fig.2 Representation of multiline interface messages in ISO 7 bit code with the ASCII table.

	bit 7	bit 6	bit 5	bit 4	bit 3	bit 2	bit 1
Talk-addr.	1	0	x	x	x	x	x
Listen-addr.	0	1	x	x	x	x	x

device address (selectable)

Fig.3

3.3.2.3 Connecting cables for the IEC bus system

A range of connecting cables for computer controlled test and measuring equipment conforms to the IEC 625 system of interfacing. The cables are fitted with two 25-pole connectors at each end; one of the connectors is male, the other female. The two connectors are mounted back-to-back in an aluminium housing which is clamped onto the cable.
The cable contains 24 separately insulated conductors arranged as 12 twisted pairs.
A special adapter is also available for use with American test equipment which employs the IEEE-488/75 bus system.

4 standard cables meet the requirements:

- PM 9480 IEC bus cable, length 1 m
- PM 9481 IEC bus cable, length 2 m
- PM 9482 IEC bus cable, length 4 m
- PM 9483 IEC/IEEE cable adapter, length 1m

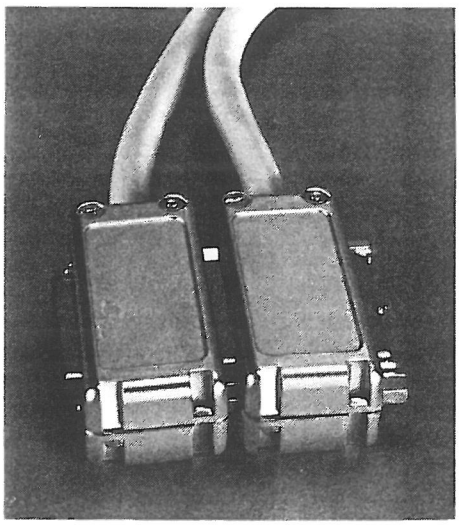

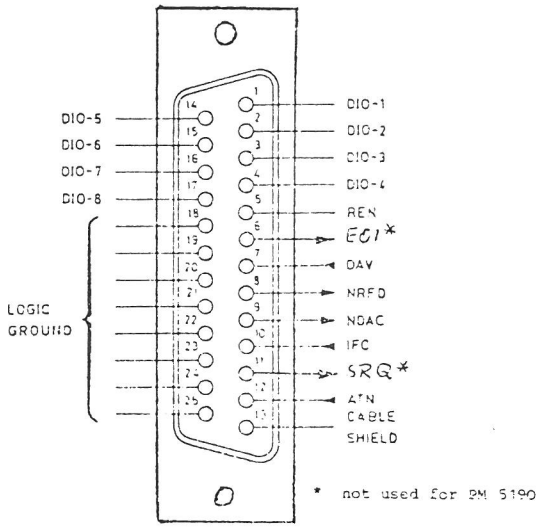

Fig.4 IEC bus cable connector

3.3.3. Programming examples

3.3.3.1 Frequency data string format

On the 8 bit parallel data lines the frequency instruction must be programmed as follows:

1.	2.	3.	4.	5.	6.	7.	8.	9.	byte
F	X	X	.	X	X	X	X	ETX	

- F: frequency identification
- the decimal point may be left out;
  can be set at any position
- the dimension of the frequency is always kHz
- spaces are ignored
- 1 digit at least must be set
- if more than 6 digits are set, the first 6 are accepted, the further digits are ignored
- other characters than digits, decimal point or spaces are accepted, but will wrongly be interpreted
- ETX: end of text; may be left out and set at the end of the complete instruction;
  initiates execution of the data preceded.

Example: F12.5ETX means

set frequency to 12.5 kHz
execute

Out-of-range indication:

If you choose a setting exceeding the permitted ranges or resolution, the display starts flashing, see chapter 3.2.3.

3.3.3.2 Ac/dc data string format

The ac/dc instruction must be programmed as follows:

1.	2.	3.	4.	5.	6.	7.	8.	9.	10.	byte
A	X	X	.	X	D	-	X	X	ETX	
ac value					dc value					

- A: ac identification
- for the ac value 3 digits must be set;
  leading and trailing zeroes must not be left out
- the first ac digit must be 0 or 1
- a decimal point must be set either in front of the 1st, 2nd or 3rd digit; otherwise the sequence will be ignored
- spaces are ignored

- D: dc identification; must be set as 6th byte; otherwise the sequence will be ignored
- for positive dc values the + sign must be left out;
  in consequence the string comprises 9 bytes only
- for the dc value the decimal point must be left out, as it is determined by the ac d.p. setting; otherwise the complete instruction will be accepted but wrongly interpreted
- it is not possible to set a dc-value without any ac-value

Formatting with PET/cbm

When formatting the amplitude control string by means of the PET/cbm BASIC computer the main ideas for solving the problem are:

1. Adding a great decimal value to the amplitude value. The numerics of the decimal value at the positions of the amplitude value should be zeros.

2. Converting the sum of the two values to a string.

3. Dividing a substring with three characters including the decimal point depending on the amplitude A.

Example:

	A = 0.35 V
Decimal value for adding	100.0005
Sum of these values	100.3505
Segment of the sum with three characters for controlling the PM 5190.	0.35

You can see in which way leading and trailing zeros are provided by using this method.
The assignment of the position of the stringsegment to the value of the amplitude A you can see in the following table:

	A	A + 100.0005
< .2	0.001	100.0015
	.	.
	.	.
	.	.
	0.199	100.1995
< 2	0.2	100.2005
	.	.
	.	.
	.	.
	1.99	101.9905
> 2	2.0	102.0005
	.	.
	.	.
	.	.
	19.9	119.9005

There are three possibilities of constellation depending on the value A being less than .2 V, between .2 V and 2 V or greater than 2 V.

The following subroutine is an example for programming such a providing method to form an ac-control-string.

```
800 A$ = STR$(100.0005+A)
810 FOR I = 0 TO 2
820 IF A = .2*10↑I THEN 850
830 M$ = MID$(A$,5-I,4)
840 RETURN
850 NEXT I
```

In this small example the variable A represents the amplitude value. M$ is the result of this algorithm, the correct formatted stringsegment to control the ac-setting of PM 5190.

Example: PRINT#5,"A";M$;"D00";CHR$(3)

The meaning of CHR$(3) is the control symbol ETX which must be sent to terminate the datastring.

The programming method shown above is very useful if you have to format a great many of different amplitude values. This can happen in case you want to program e.g. an amplitude sweep where the amplitude is a value which changes within a wide range.

Formatting the DC-value

As well as for the amplitude values it is only useful to write a special formatting-routine for the dc-values if you want to deal with a great many of different dc-offsets. Because of the necessity of coupling the ac- and dc-value in programming the PM 5190 we have thought for a formatting routine where both values are formatted and prepared, ready to be sent onto the IEC bus.

```
993 REM  ****************************
994 REM
995 REM       AC/DC FORMATIERUNG
996 REM       ------------------
997 REM  BEI UEBERSCHREITUNG DES MAXI-
998 REM  MALEN AUSGANGSPEGELS ERFOLGT
999 REM  FEHLERMELDUNG UND
1000 REM PROGRAMMSTOP
1001 REM
1005 IF A<=19.9 THEN 1030
1010 PRINT "ERROR:AMPLITUDE>19.9V"
1020 END
1030 A$=STR$(100.0005+A)
1040 FOR I=0 TO 2
1050 IF A>=.2*10↑I THEN 1080
1060 M$=MID$(A$,5-I,4)
1070 GOTO 1090
1080 NEXT I
1090 IF I=0 THEN 1120
1100 IF I=1 THEN 1150
1110 IF I=2 THEN 1180
1120 IF A/2+D<.1 THEN 1210
1125 X=.1-A/2
1130 PRINT"ERROR:DC>=";X;"V"
1140 END
1150 IF A/2+D<1 THEN 1210
1155 X=1-A/2
1160 PRINT"ERROR:DC>=";X;"V"
1170 END
1180 IF A/2+D<10 THEN 1210
1185 X=10-A/2
1190 PRINT"ERROR:DC>=";X;"V"
1200 END
1210 D$=STR$(10.00005+D/10)
1220 N$=MID$(D$,7-I,2)
1230 RETURN
```

A is the amplitude value in volts
D is the value of the dc-offset in volts
M$ is the correct formatted amplitude value
N$ is the correct formatted dc-value without sign

Example: A = 1
D = 0.5

the result of the formatting routine is then

M$ = 1.00
N$ = 50

In case, that the dc-value is too large that with a given amplitude the output amplifier would be overshoot, the formatting routine initiates an error message and a program-stop.

Example: A = 1.23
D = 1.

the error indication then would be:

ERROR : DC > = 0.38 V

The subroutine firstly executes a part for formatting the amplitude value A. The resulting value of the variable I is used in the following part for a previous examination of the dc-amount in the respect of range exceedings. If the dc-range is exceeded an error-message is given and the program is stopped, otherwise the string-segment is prepared by using the variable I in a way which is very similar to the way of preparing the amplitude. Leaving the subroutine you have a properly formatted dc-string N$.

Bus data

The LF-synthesizer PM 5190 requires as termination of a control string the control character ETX (= ASCII 3). Using the PET/cbm BASIC Computer for programming the PM 5190 the ETX symbol is realized by CHR$(3). Furthermore each data transfer from this controller to the generator must be opened with an OPEN instruction and closed with a CLOSE instruction.

Example for a frequency control string:

```
OPEN 5,4,0
PRINT#5,"F1";CHR$(3)
CLOSE 5
```

This small example shows you in which way the PM 5190 can be controlled from the PET/cbm BASIC-computer. In this case the frequency is set to 1 kHz with the string "F1", you remember, that in remote state each frequency declaration is done in kHz.

Example for an amplitude/dc-control string:

```
OPEN 5, 4, 0
PRINT#5,"A";M$;"D";N$;CHR$(3)
CLOSE 5
```

amplitude and dc-offset are set to the values of M$ and N$.

3.3.3.3 Format of the wave form control string

For setting the wave form the PM 5190 requires a control string in the following form:

1.	2.	3.	Byte
W	X	ETX	

- W is the identification for wave form
- X is the parameter to select the wave form

1 = sine wave
2 = square wave
3 = triangular wave
4 = sine wave/AM ext.
5 = triangular wave/AM ext.

- Keying in any other parameter effects, that the command is refused to be executed.
- Spaces are ignored
- ETX = end of text (ASCII character 3); receiving this character starts execution of this command.

Thus each control string, for single and multiple instructions, must be terminated by ETX for the purpose of executing the transmitted commands.

3.3.3.4 Example for a multiple instruction

F3.3A1.5ODO5W1ETX

This complete instruction effects the setting of the following parameters:

frequency = 3.3 kHz
amplitude = 1.5O Vpp
dc-offset = +O.O5 V, and the sine wave form.

With ETX this control string is executed which means that all the parameters are read from the processor in the PM 5190, converted to a special binary signal which is then used to control internal functional units like phase-accumulator, attenuator etc.

3.3.4. Application examples

3.3.4.1 Frequency response

In laboratories and development departments you often have to solve the problem of measuring frequency responses with a high accuracy e.g. < 0.05 dB in the frequency range up to 100 kHz or < 0.2 dB in the frequency range up to 1 MHz. The conventional method, the manual frequency setting and drawing the frequency response by hand, is a very uneffective and lengthy activity. Because it is no problem to get programmable measuring instruments with sufficient accuracy, there is no question to realize a test assembly for automatically data aquisition and analyzing e.g. with a small desk top calculator like PET/cbm.
For this application we have used the programmable LF synthesizer PM 5190 and the digital RMS-voltmeter Fluke 8920A with bus-translator 1120A, fig.5. The result is plotted on the digital plotter PM 8150, fig.6. During the program is scanning the frequency range, all frequency values with the concerning amplitude-values are shown on the display. To get a wide frequency and amplitude range, the program calculates logarithmic scales for frequency, as well as for the amplitude-co-ordinate.

Specification of the test assembly

Instruments:

1. LF-synthesizer PM 5190	address 4
2. RMS-voltmeter Fluke 8920A	address 5 (the secondary address in the translator 1120A is switched off by shutting the solder switches 1 and 6)
3. X-Y plotter PM 8150	address 6

Measuring parameter

Starting the program, the desk-calculator asks for all parameters that are necessary for realizing a complete measuring cycle. This is a request for the user to type in the values on the calculator keyboard.

1. F1 (kHz)	lower limit of frequency range
2. F2 (kHz)	upper limit of frequency range
3. FO (kHz)	frequency reference value (the value which is measured at this point is set to 0 dB)
4. n	number of steps between F1 and F2
5. A (Vpp)	output amplitude of generator
6. D (V)	dc-offset of generator
7. A1 (dB rel.)	lower dB-limit of co-ordinate-system
8. A2 (dB rel.)	upper dB-limit of co-ordinate-system

Explaining the measurements

The frequency range between F1 and F2 is divided into n steps in a logarithmic scale. Starting the program, the desired frequency range is measured step by step, in each of the n steps a voltage measurement (Urms) is done, each value and the concerning frequency are stored in the computer memory and listed on the display during the frequency range is scanned.
The second part of the program calculates the relative amplitude-values (in dB) and prints table with the frequency and the corresponding relative amplitudes.
After this the plotter starts drawing the co-ordinate-system and the curve of the frequency response. The point of the reference-frequency is marked as a small circle, the values A1, A2, F1 and F2 are written beside the corresponding co-ordinate-line. The values of reference-frequency, reference-amplitude and generator amplitude are written below the co-ordinate-system.

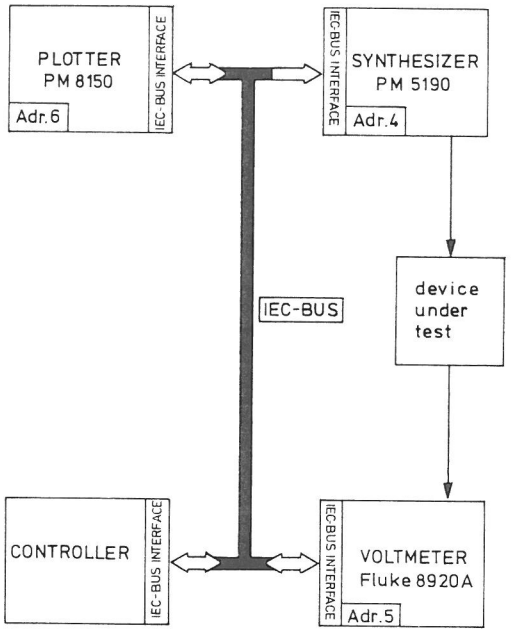

Fig.5

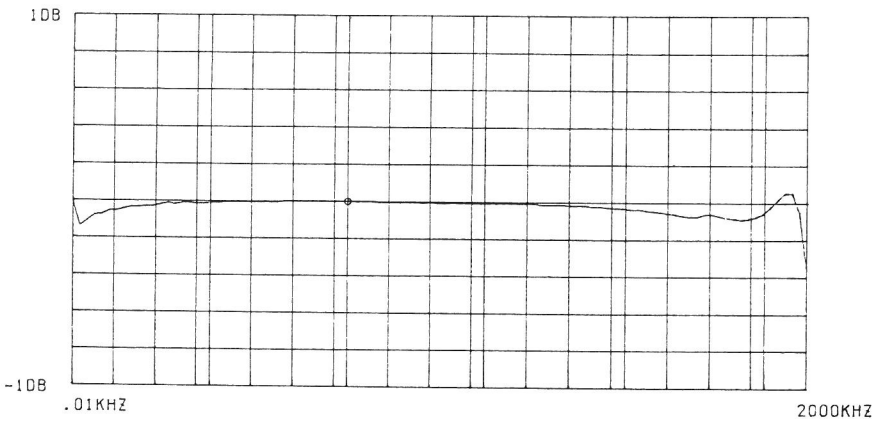

REFERENZFREQUENZ= 1KHZ

REFERENZAMPLITUDE= 1.798VRMS ENTSPR. 5.08834VP-P

GENERATORAMPLITUDE= 10VP-P ENTSPR. 5VP-P AN 50 OHM

Fig.6

```
10 REM  ******************************
20 REM
30 REM
100 REM ALLGEMEINES PROGRAMM ZUM
110 REM PLOTTEN VON AMPLITUDENGAENGEN
120 REM IM DOPPELT-LOGARITHMISCHEM
130 REM MASSTAB;PARAMETER:
150 REM F1,F0,F2,N,A,A1,A2
160 REM
240 REM VERWENDETE GERAETE:
250 REM VOLTMETER FLUKE 8920A,ADDR.5
260 REM PLOTTER  PM5180,ADDR.6
270 REM LF-SYNTHESIZER PM5190,ADDR.4
275 REM
280 REM ******************************
281 REM
282 REM FELDDIMENSIONIERUNG
283 REM
290 DIMH(101):REM H(I)=FREQ.VARIABLE
295 DIME(101):REM E(I)=SPGS.VARIABLE
300 REM
301 REM ******************************
302 REM
303 REM      PARAMETER - EINGABE
304 REM
310 PRINT"□":PRINT:PRINT
315 PRINT "EINGABE DER UNTEREN FREQ.-"
320 PRINT:PRINT "GRENZE F1(KHZ)      ";
325 INPUT F1
330 REM
335 PRINT:PRINT
340 PRINT "EINGABE DER OBEREN FREQ.-"
345 PRINT:PRINT "GRENZE F2(KHZ)      ";
350 INPUT F2
355 REM
360 PRINT:PRINT
365 PRINT "EINGABE DER REFERENZ-"
370 PRINT:PRINT "FREQUENZ F0(KHZ)    ";
375 INPUT F0
376 REM
380 PRINT:PRINT
385 PRINT "EINGABE DER ANZAHL DER "
390 PRINT:PRINT "FREQUENZSCHRITTE N (<=100) ";
395 INPUT N
396 REM
398 PRINT:PRINT
400 PRINT "EINGABE DER GENERATOR-"
405 PRINT:PRINT "AMPLITUDE A (VP-P)";
410 INPUT A
411 REM
412 PRINT:PRINT
415 PRINT "EINGABE DES GENERATOR-DC-"
416 PRINT:PRINT "WERTES D            ";
420 INPUT D
425 REM
426 PRINT:PRINT
428 PRINT "EINGABE DES MINIMALEN AUS-"
430 PRINT:PRINT "GANGSPEGELS(DB REL)";
435 INPUT A1
437 REM
439 PRINT:PRINT
440 PRINT "EINGABE DES MAXIMALEN AUS-"
445 PRINT:PRINT "GANGSPEGELS(DB REL)";
450 INPUT A2
455 REM
456 REM  ******************************
457 REM
458 REM
460 DEF FNK(X)=LOG(F2/F1)/N
470 DEFFNH(Z)=INT(1E6*F1*EXP(FNK(X)*I)+.5)/1E6
474 REM
475 REM
476 REM
480 GOSUB1000
485 OPEN 5,4,0
490 FORI=0 TO N
500 PRINT#5,"F";FNH(Z);"A";M$;"D";N$;CHR$(3)
530 GOSUB 900
540 LET E(I)=E
545 LET H(I)=FNH(Z)
547 PRINT H(I), E(I)
550 NEXT I
555 CLOSE 5
560 REM
565 REM  AUSLESEN DER AMPLITUDE
570 REM  BEI  F=F0
575 REM
580 OPEN 5,4,0
590 PRINT#5,"F";F0;CHR(3)
600 CLOSE 5
610 GOSUB 900
620 E(101)=E
650 GOTO 1580:REM    -->     -->
850 REM
855 REM  ******************************
860 REM
865 REM  AUSLESEN DES MESSWERTES VOM
870 REM  FLUKE VOLTMETER 8920 A
875 REM  IEC-ADRESSE = 5
880 REM  MESSWERT = 'E'
885 REM
890 REM
900 OPEN 1,5,1
910 INPUT#1,E$
920 IF ST<>0 THEN 910
930 E=VAL(E$)
940 B=E
950 INPUT#1,D$
960 IF ST<>0 THEN 950
965 E=VAL(D$)
970 P=E-B
980 IF ABS(P)>.0005*B THEN 940
990 CLOSE 1
991 RETURN
993 REM  ******************************
994 REM
995 REM      AC/DC FORMATIERUNG
996 REM      ------------------
997 REM  BEI UEBERSCHREITUNG DES MAXI-
998 REM  MALEN AUSGANGSPEGELS ERFOLGT
999 REM  FEHLERMELDUNG UND
1000 REM PROGRAMMSTOP
1001 REM
1005 IF A<=19.9 THEN 1030
1010 PRINT "ERROR:AMPLITUDE>19.9V"
1020 END
1030 A$=STR$(100.0005+A)
1040 FOR I=0 TO 2
1050 IF A>=.2*10↑I THEN 1080
1060 M$=MID$(A$,5-I,4)
1070 GOTO 1090
1080 NEXT I
1090 IF I=0 THEN 1120
1100 IF I=1 THEN 1150
1110 IF I=2 THEN 1180
1120 IF A/2+D<.1 THEN 1210
1125 X=.1-A/2
1130 PRINT"ERROR:DC>=";X;"V"
1140 END
1150 IF A/2+D<1 THEN 1210
1155 X=1-A/2
1160 PRINT"ERROR:DC>=";X;"V"
1170 END
1180 IF A/2+D<10 THEN 1210
1185 X=10-A/2
1190 PRINT"ERROR:DC>=";X;"V"
1200 END
1210 D$=STR$(10.00005+D/10)
1220 N$=MID$(D$,7-I,2)
1230 RETURN
1240 END
1500 REM  ******************************
1510 REM
1520 REM  FORTSETZUNG DES HAUPTPROGR.
1530 REM  DARSTELLUNG DER MESSWERTE
1540 REM  AUF DISPLAY.
1550 REM
1580 FOR I=1 TO N
1583 G$=STR$(H(I))
1586 L$=LEFT$(G$,8)
1587 W=INT(2E5*LOG(E(I)/E(101))/LOG(10))/1E4
1590 PRINT L$;"KHZ",W;"DB"
1600 NEXT I
1610 REM
1630 REM
2900 REM  ******************************
```

```
2910 REM
2920 REM  ZEICHNEN DES KOORDINATEN-
2930 REM  RASTERS AUF PLOTTER PMS150
2940 REM
2950 REM  IEC-ADRESSE = 6
2960 REM
3000 OPEN 3,6,0
3010 DIM Q(4)
3020 PRINT#3,"M 1300,1000";CHR$(3);"E 0,1000";CHR$(3)
3025 PRINT#3,"E 2000,0,0,-1000,-2000,0";CHR$(3);"O 0,0";CHR$(3)
3040 Q(1)=1
3050 Q(2)=2
3060 Q(3)=4
3070 Q(4)=8
3080 DEF FNL(X)=B*Q(I)
3090 DEF FNR(X)=INT(2000*LOG(FNL(X))/LOG(F2/F1))+1300
3100 B=.1
3110 B=10*B
3120 FOR I=1 TO 4
3130 IF FNL(X)>=F2/F1 THEN 3170
3140 PRINT#3,"M";STR$(FNR(X));",";"1000";CHR$(3)
3142 PRINT#3,"E 0,1000";CHR$(3)
3145 PRINT#3,"O 0,0";CHR$(3)
3150 NEXT I
3160 GOTO 3110
3165 REM
3170 DEF FNS(X)=1000+I*100
3180 FOR I=1 TO 9
3190 PRINT#3,"M";STR$(1300);",";STR$(FNS(X));CHR$(3)
3200 PRINT#3,"E 2000,0";CHR$(3)
3210 NEXT I
3220 PRINT#3,"O 0,0";CHR$(3)
3310 DEF FNX(X)=INT(1300+LOG(H(I)/F1)*2000/LOG(F2/F1))
3320 DEFFNZ(X)=2000-A2*1000/(A2-A1)+20*LOG(E(I)/E(101))*1000/((A2-A1)*LOG(10))
3325 DEF FNY(X)=INT(FNZ(X))
3330 REM
3331 REM ******************************
3332 REM
3333 REM ZEICHNEN DES AMPLITUDENGANGES
3335 REM
3340 I=0
3350 PRINT#3,"M";STR$(FNX(X));",";STR$(FNY(X));CHR$(3)
3360 FOR I=1 TO N
3370 PRINT#3,"D";STR$(FNX(X));",";STR$(FNY(X));CHR$(3)
3371 FOR G=1 TO 5
3372 L=LOG(G+125)
3373 NEXT G
3375 NEXT I
3376 REM  BESCHRIFTUNG DER ACHSEN UND
3377 REM  AUSGABE VON REF.-FREQ. UND
3378 REM  REF.- AMPLITUDE
3379 REM
3380 PRINT#3,"O 0,0";CHR$(3)
3390 H(101)=F0
3400 I=101
3410 PRINT#3,"M";STR$(FNX(X));",";STR$(FNY(X));CHR$(3)
3420 PRINT#3,"N";STR$(5);CHR$(3)
3430 PRINT#3,"M 1120,980";CHR$(3)
3440 PRINT#3,"P";STR$(A1);"DB";CHR$(3)
3450 PRINT#3,"M 1120,1980";CHR$(3)
3460 PRINT#3,"P";STR$(A2);"DB";CHR$(3)
3470 PRINT#3,"M 1250,930";CHR$(3)
3480 PRINT#3,"P";STR$(F1);"KHZ";CHR$(3)
3490 PRINT#3,"M 3250,930";CHR$(3)
3500 PRINT#3,"P";STR$(F2);"KHZ";CHR$(3)
3510 PRINT#3,"M 1300,800";CHR$(3)
3520 PRINT#3,"P REFERENZFREQUENZ=";STR$(F0);"KHZ";CHR$(3)
3530 PRINT#3,"M 1300,700";CHR$(3)
3540 PRINT#3,"P REFERENZAMPLITUDE=";STR$(E(101));"VRMS";CHR$(3)
3541 PRINT#3,"P ENTSPR.";STR$(2.83*E(101));"VP-P";CHR$(3)
3542 PRINT#3,"M 1300,600";CHR$(3)
3544 PRINT#3,"P GENERATORAMPLITUDE =";STR$(A);"VP-P";CHR$(3)
3546 PRINT#3,"P ENTSPR.";STR$(A/2);"VP-P AN 50 OHM";CHR$(3)
3550 PRINT#3,"O 0,0";CHR$(3)
3560 PRINT#3,"H";CHR$(3)
3570 CLOSE 3
3580 END
3590 REM
3600 REM
3610 REM  ****************************
```

APPLICATION EXAMPLES, continued

3.3.4.2 PM 5190 and the PM 4410 instrumentation controller

A basic IEC bus instrumentation set-up can be arranged by plugging the PM 4410 instrumentation controller and the PM 5190 together, and a loud-speaker in addition.

Although this example may not find your professional interest, more dedicated to industrial and sophisticated applications (see the previous chapter), take also this musical example for introducing the IEC bus control of the instrument:

The melody of the german/french folk song "Heißa Kathreinerle, schnür mir die Schuh'..." was coded and stored on mini floppy disk, set into the memory of the PM 4410 via its built-in mini floppy disk drive and transmitted to the synthesizer via the IEC bus.

We must appologize to the musicians among ourselves for being unable to introduce the musical design of soft full tones into the program and for the lack of human emphasis and expression of the folk song. But in cooperation with our professional audio systems department it would be a pretty nice task to cope those problems too.

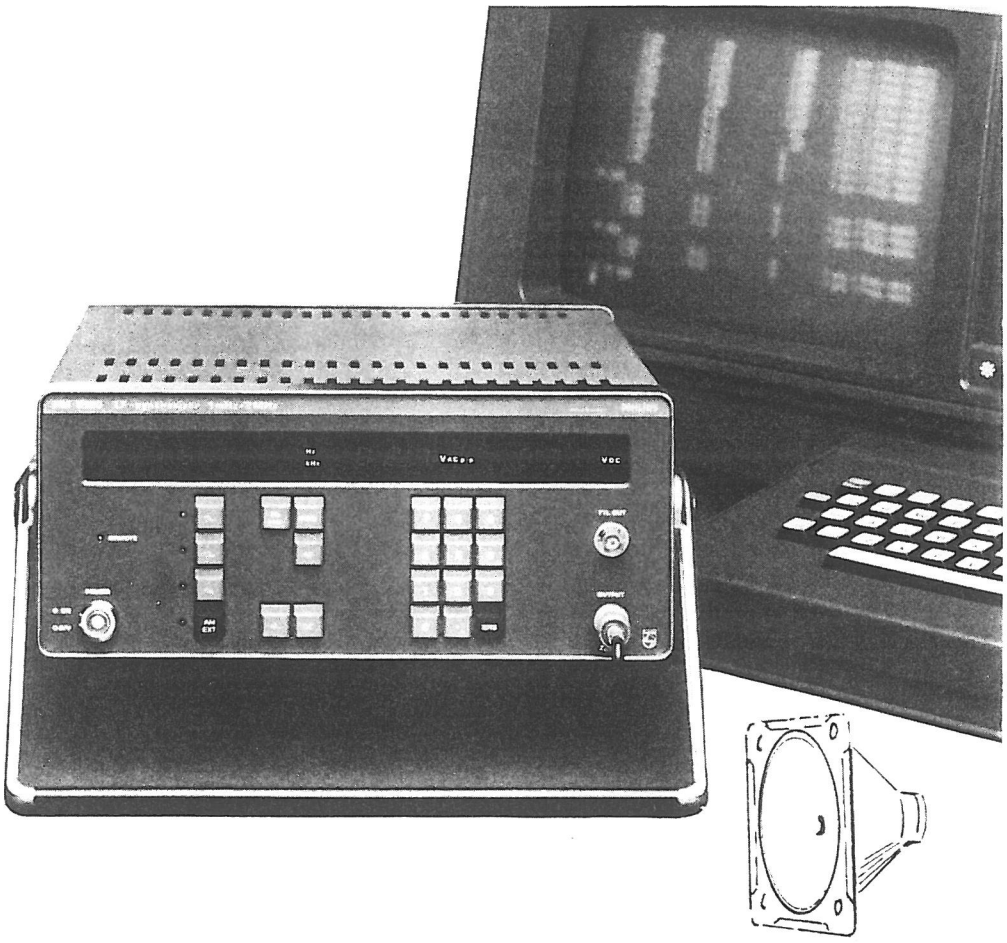

Fig.7 IEC bus instrumentation set-up:
- PM 4410 instrumentation controller
- PM 5190 LF synthesizer
- loud-speaker

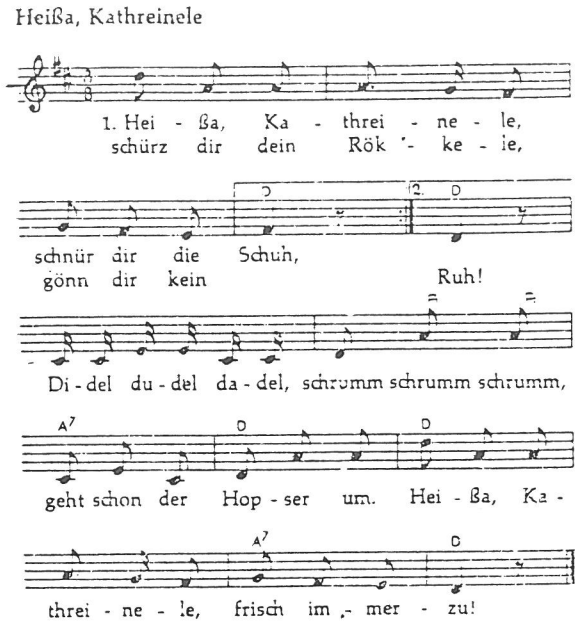

Fig.8 Melody of the folk-song

```
1 PRINT #G:"A.001D00"
2 END
100 INIT
105 LET G=4
106 PRINT #G:"W3A.001D00"
110 DIM F(12,6)
120 LET F0=55
130 FOR I=1 TO 6
140 FOR J=1 TO 12
150 LET C=12*(I-1)+J
160 LET F(J,I)=INT(F0*2**((C+2)/12)*100+.5)/1E5
170 NEXT J
180 NEXT I
210 READ X,Y,Z,Z1,A$
220 IF X=0 THEN 250
225 PRINT #G:"F";F(X,Y+2);"A";A$;"D00"
230 DELAY INT(15/Z+.5)
235 IF Z1=0 THEN 210
236 PRINT #G:"A.001D00"
237 DELAY INT(15/Z1+.5)
240 GOTO 210
250 PRINT #G:"A.001D00"
255 DELAY 5
256 RESTORE
257 GOTO 210
260 DATA 3,3,4,100,"19.9",10,2,4,100,"19.9",10,2,4,100,"19.9",10,2,2.7,10,"19.9"
270 DATA 8,2,8,100,"19.9",7,2,4,100,"19.9",8,2,4,100,"19.9",7,2,4,100,"19.9"
280 DATA 5,2,4,100,"19.9",7,2,2,4,"19.9"
290 DATA 3,3,4,100,"19.9",10,2,4,100,"19.9",10,2,4,100,"19.9",10,2,4,100,"19.9"
300 DATA 8,2,8,100,"19.9",7,2,4,100,"19.9",8,2,4,100,"19.9",7,2,4,100,"19.9"
310 DATA 5,2,4,100,"19.9",3,2,2,4,"19.9"
320 DATA 2,2,8,100,"19.9",2,2,8,100,"19.9",5,2,8,100,"19.9",5,2,8,100,"19.9"
330 DATA 2,2,8,100,"19.9",2,2,8,100,"19.9",3,2,4,100,"19.9",10,2,4,100,"19.9"
340 DATA 10,2,4,100,"19.9",2,2,4,100,"19.9",5,2,4,100,"19.9",2,2,4,100,"19.9"
350 DATA 3,2,4,100,"19.9",10,2,4,100,"19.9",10,2,4,100,"19.9",3,3,4,100,"19.9"
360 DATA 10,2,4,100,"19.9",10,2,4,100,"19.9",10,2,2.7,100,"19.9",8,2,8,100
370 DATA "10.9"
380 DATA 7,2,4,100,"19.9",8,2,4,100,"19.9",7,2,4,100,"19.9",5,2,4,100,"19.9"
390 DATA 3,2,2,100,"19.9"
9999 DATA 0,0,0,0," "
:EOS
```

Fig.9 Programmed melody of the song, PM 4410 input

This programme is converted to IEC bus instructions by the PM 4410.
Let us explain some data, the first note of our song e.g.

260 DATA 3,3,4,100,"19.9"

- "19.9" — ac value (volume) of the tone
- 100 — pause after the tone
- 4 — length of the tone
- 3,3 — frequency

1. 3,3 frequency of the tone: "d"

   The first digit represents the (3rd) tone within one octave of 12 half-tones (X in the program), starting with c.
   The frequency increment is $\sqrt[12]{2}$ which is programmed in the controller.
   The second digit represents the octave; 6 octaves are available for the melody range Y:

   1 - contra-basso, whisky sound
   2 - basso
   3 - baritono
   4 - alto/tenore
   5 - soprano
   6 - sopranino

   For transposing the melody into different octaves, see line 225:
   225...F(X,Y+2)....

   Y + 2 means that all notes will sound 2 octaves higher than originally written in the program. So the first tone e.g. will sound in the 3 + 2 = 5th octave.

   For the frequency see lines 130 to 150:
   1,1 represents the lowest tone of 55 Hz, see line 120 LET F0=55.

2. Length of the tone, 3rd data, Z

   See line 230 DELAY INTEGER (15/Z+.5)
   Z = 1 represents 1 full note of 1.5 sec, so
   Z = 4: 15/4 ≙ 1/4 note, approx. 0.4 s

Z	1	2	3	4
note	𝅝	𝅗𝅥	♩	♪

   The song velocity is two times the coded velocity.

3. Delay after the tone, 4th data, Z1, see line 237

   100 represents a pause of 1/100 full note.

4. Ac value (volume of the tone): 19.9 Vac

   In the pauses the volume is "A.001" ≙ 1 mVac.
   The dc value is always set to D00 ≙ 0 mV.

If we look into the future why not take several sets of the described instruments, add multiplex techniques and audio instrumentation in order to have the

"IEC bus symphony number 9 of Ludwig van Beethoven" .

4. C I R C U I T D E S C R I P T I O N

4.1. OSCILLATOR (fig.45)

The crystal oscillator is designed as a capacitive Hartley oscillator circuit (clapp oscillator) and is compensated with the aid of temperature coefficients of the capacities 500, 504 and 505. The microprocessor (8035) and also the IEC bus interface component (HEF4738) and the keyboard/display interface component (8279) are fed via decade counter 330 by the frequencies fo/2 and fo/5 as clock frequency. The master frequency of fo = 8589934 Hz ($2^{33} \times 10^{-3}$) is determined by the frequency synthesis.

4.2. IEC BUS INTERFACE (fig.45)

The 25 pin IEC bus connector is the mechanical connection to an IEC bus system. The electric connected load values corresponding to the system are arrived at by the bus-drivers 345, 346, 347, 348 (MC3441P).
On account of the "listener only function" of the PM 5190, the wiring of the interface component is easily accomplished. The listener address is set with the 5 switches 802 - 806. This address is read in, in parallel after being called via the output pin 10 (ored = output ready has + 5 V) into the shift register 351, and is read out serially with the clock frequency (ored has 0 V). The gate 329/pin 13 operates as delay element to comply with the time conditions given by the interface component.
The solder joint C is closed in its delivery condition. This causes the automatic local position of the PM 5190 to be achieved when the line REN (remote enable, pin 5 IEC bus socket) is interrupted. When the solder joint B is closed, an apparatus which has been addressed once also stays in the remote condition after the connection to the IEC bus has been interrupted. This state of the apparatus can only be altered via a bus-command (go to local) or by switching off the apparatus.

In order to have improved electromagnetic compatibility (EMC) it can be advantageous to connect the screen of the IEC bus cable, pin 13, to ground via closed solder joint A. Grounding of the controller also can be advantageous.

Internal and external bus of the apparatus must be separated by AND gates which can be activated to ensure that the internal data flow is not interfered with. A direct connection of both bus systems is effected for acceptance of parameter settings by the microprocessor with the control signals dvd (data valid device) and RD (read data) via the tristate gates 328, 329 (dvd and RD : high). The interface circuit for realizing the priority between the IEC bus input and the keyboard parameter setting is set up with the aid of the gates 342/pin 1,2,3; pin 4,5,6 and 341/pin 1,2,3; pin 4,5,6.

4.3. CONTROL CIRCUIT (fig.45)

The central control circuit is formed by the 3 components 332, 334, 333 (microprocessor 8035, program memory B2716, latch component HEF4508). In delivery condition the solder joint E is closed (memory extern).
The clock frequency of the 8035 (fo/2) is derived from the master frequency fo = 8589934 Hz. Complementary signals must be offered to the microprocessor at clock frequencies > 1 MHz and separate clock frequency

generation at its inputs X-tal 1 and X-tal 2. This phase shift of the clock frequency by 180° is effected with the gates 327/pin 1,2,3, pin 4,5,6.
The components actively engaged in data handling (8035, HEF4738, 8279) must possess a definitive starting condition after the PM 5190 is switched on. Each of the components mentioned has its own reset circuit: 401, 518, 615, 350/U2 for HEF 4738
690, 520 /U4 for 8279
550, 630 /U2 for 8035
The time constants are matched with each other so that the microprocessor can work on functionable components after being reset.

4.4. KEYBOARD AND DISPLAY (figs.40, 41)

The central circuit device is the microprocessor controlled component B8279 (pos.301). This keyboard/display interface component produces the scan signals SC0 - SC7 for inquiring the keyboard matrix and for triggering the 7 segment displays (multiplex procedure). The decimal point in the display fields and the Hz, kHz-LED's, and also the operation indication-LED's: REMOTE, ∼, ∼, AM, are triggered directly via the port-outputs of the microprocessor and the transistors 380 - 388 and also the gates 304.
Sufficient illumination of the 7-segment display fields is achieved by a segment current of 80 mA (during 1/15 scan period). A limitation to a maximum current of 100 mA is effected by the resistors 619 - 625.
For recognition of fed-in parameter values being out of range the respective display field blinks with about 1 Hz. This blinking frequency is produced by the timer component 307 and is connected to the 7 segment decoder (308, pin 4) by the interface component via the gate 306/11,12,13. Recognition of out of range operation is effected in the program of the microprocessor, which then sets the 5th bit (output A_0) in the display-RAM of 8279 to "high" and feeds the blinking frequency via 306, pin 13.

4.5. DIGITAL SIGNAL SYNTHESIS (figs. 10, 45)

The block diagram for producing a binary sequence of numbers which corresponds to a sine or triangle signal, is depicted in fig. 10 and mainly consists of the phase accumulator, complementer 1, sine/triangle selector, sine-ROM and complementer 2 followed by the digital to analog converter (DAC).

The signal generation techique used in this generator is based on the principle of direct digital signal synthesis. The signal time function is generated as a sequence of binary numbers which may be interpreted as a digital sample and hold function of the desired signal. The digital samples are then converted into an analogue voltage by the DAC.

The phase accumulator generates a continuous sequence of 33 bit binary numbers with values increasing linearely between 0 and $2^{33}-1$. Via clock pulse the output is incremented by the value δ (δ = fg/mHz) of the input frequency word. After reaching or on exceeding the upper limit 2^{-1} the accumulator output is reset to $0 \ldots \delta-1$ and starts with incrementing again. This results in a cyclic sequence of binary numbers, which has a sawtooth wave form character and a frequency $fg = 1/T = \delta \times fo \times 2^{-L}$. fg is equivalent to the frequency of the sine wave to be generated.

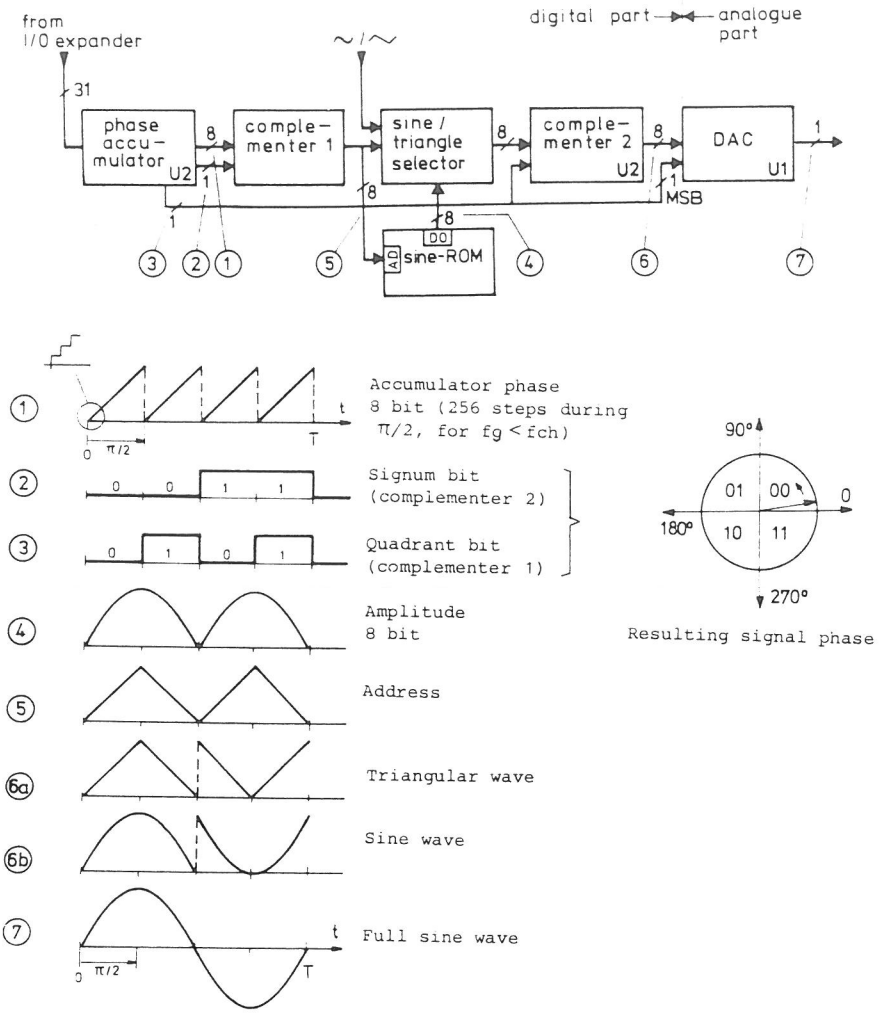

Fig. 10 Digital signal synthesis

The value δ of the frequency word defines the generator output frequency in mHz. For further processing the upper 10 bits are used only. The most significant 10th bit of the phase accumulator is used as polarity or signum bit (SIGN) and represents the periodically repeated phase samples (arguments) between 0 and 2π of the sine wave to be generated. The 9th bit denoted quadrant bit (QUADR), together with the MSB defines the quadrant of the complex plane in which the signal vector is actually located and is fed to the complementer 1. The remaining 8 bit numbers represent a sampled sawtooth function with 4 sawtooth periods during T. By intermittent 1's-complementing the 8 bit samples in the phase complementer, controlled by the quadrant bit, a sequence of 8 bit samples results which has a triangular wave form character. These samples are used for addressing a ROM containing the first quadrant ($0 - \pi/2$) sine wave values. The range of the read out amplitude magnitudes is from 0 to $2^M - 1$. The sequence of amplitude samples represents a commutated sine wave. By intermittent 1's-complementing in the following amplitude complementer, controlled by the signum bit, the resulting M+1 bit samples including the inverted signum bit give the full sinusoidal samples. Depending on the definition of the inverted signum bit, namely as signum bit of M bit words or as MSB of M+1 words, the output function may be interpreted as sine wave symmetrical with respect to zero or as positive offset sine wave (value M = 8).

Full phase quantization of 1024 steps per period T (512 amplitude steps peak to peak) is utilized up to the characteristic frequency fg = fch at which the phase accumulator output is just incrementing one least significant bit (LSB) per clock pulse (see fig. 11). This is the case for $\delta = 2^{23}$ mHz = fch $\simeq$ 8.39 kHz. Above fch the number of phase steps decreases proportionally with the signal period T. Hence at 2MHz about 4 phase steps and therefore 4 amplitude samples only are calculated per signal period. After analog conversion a clean and smoothed sine wave is derived from this roughly graded sample function by low-pass filtering for all frequencies above fch. Below fch the number of phase steps per period T is constant 1024. The phase sample duration thereby increases proportionally with T. Thus the low pass smoothing effect diminishes and the fine stair case structure of the signal appears.

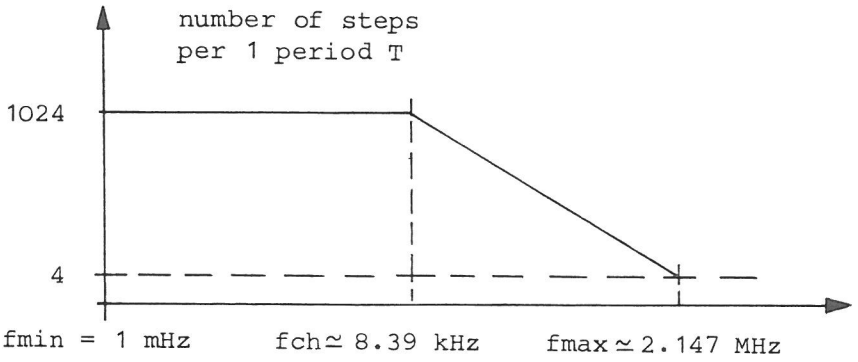

Fig. 11

Characteristics of digital signal synthesis

clock frequency	fo	$= 2^L \times 10^{-3} = 8.589934$ MHz
generator frequency	fg	$= \delta \times fc \times 2^{-L}$
accumulator length	L	= 33 bit
valence of frequency word	δ	= fg/mHz
max. generator frequency		= 2.14748 MHz
min. generator frequency		= 1 mHz
characteristic frequency	fch	= 8.388608 kHz
phase steps	(fg < fch)	$= 2^{10} = 1024$
min. phase steps (fmax = 2.147 Mhz)		$\simeq$ 4

4.5.1. Phase accumulator

The phase accumulator circuitry generates a 10 bit number sequence, see figs. 10, 11. The circuitry consists of the 4-bit full adders 352 - 359, the D-flip flops 360 - 365, and the JK-flip-flop 369.
The 31 input lines of the accumulator are set to the binary value δ of the chosen frequency fg via the I/O-expander 335 - 337.
For example: fg = 1 mHz input 359.6 is set to H
fg = 15 mHz all 4 inputs 359 are set to H

The binary output result of the 4-bit full adders is incremented by the value δ at each clock pulse at the D-FF 360 - 365. When the accumulator length is filled up, a new binary cycle starts with the lowest value δ -1.

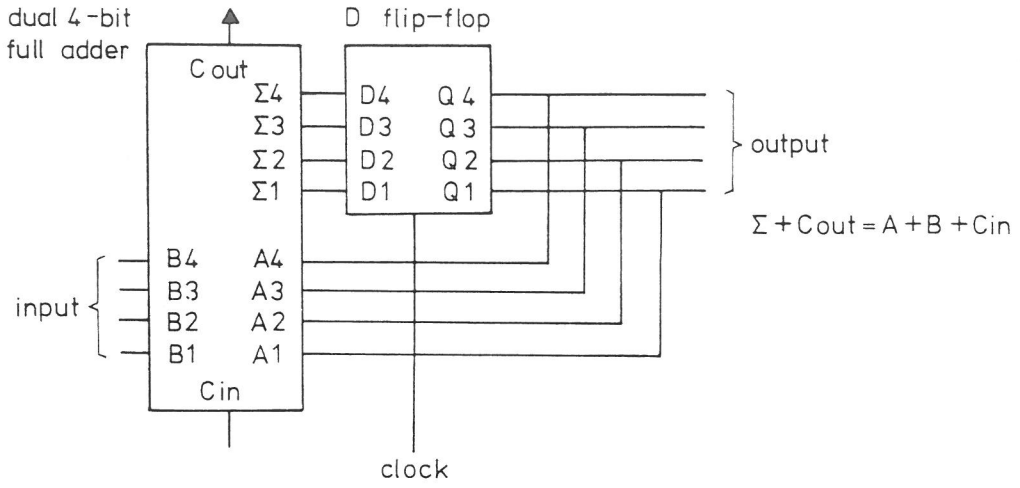

Fig. 12 Dual 4-bit accumulator

After the lowest four adders 359 - 356 the transfer is delayed by one cycle via D-flip-flop 362. This delay is necessary, because the delay time of the transfer comes near to the value of the cycle period, making faulty acceptance conditions in the D-flip-flop possible (Σ transfer delay time < cycle period). This delay of transfer by one clock cycle means:

- for a frequency adjustment of $fg \leq 65.636$ Hz (increment adjustment $\delta < 2^{16}$) only the carry over at 356.9 which controls the output signal is delayed by one cycle. Thus the output signal is shifted exactly by one cycle period as compared to a defined starting time.
- for a frequency adjustment of $fg \geq 65.636$ Hz a delayed carry is added to the increment addition. As the transfer is present in equidistant time sequences - as with no delay - the periodity of the levels of the generated number sequence is not altered in any way (10 bit output number), and the same applies to the signal.

Trouble shooting the phase accumulator

Special frequency settings are useful for fault finding and to control the function of input line and the accumulator. In addition see chapter 6.4.8.5. for checking the frequency accuracy of the synthesizer part. For this measurements an oscilloscope and a frequency counter should be used. Because of spikes and noise of digital signals the counter should have adjustable trigger level. Proper measuring ground of Unit 2 is necessary.

Set the frequency of PM 5190 to 0.001 Hz/65.536 Hz. Then input of 359.6/355.6 is set to TTL-high level while all other input lines of 352 - 359 are set to logic low level.
Check the correct clock frequency fo = 8.589934 MHz $\pm$ 4 Hz (see chapter adjustments 6.4.1.).

Control frequency at the carry output of adders 359 - 355 pin 9.

frequency setting: 0.001 Hz		65.536 Hz	
measuring point	measured value	measuring point	measured value
359.9	536.868 kHz	355.9	536.868 kHz
358.9	33.554 kHz	354.9	33.554 kHz
357.9	2.0971 kHz	353.9	2.0971 kHz
356.9	131.07 Hz	352.9	131.07 Hz
355.9	8.192 Hz		

A different more detailed way to check the 8 separate accumulator stages is to use logic table Fig. 13. Set the generator frequency as shown in the first column and measure the frequency at the carry out of the corresponding adder pin 9. The practice has shown that it is more efficient to change the relevant adder circuit with the assigned D-flip-flop after fault finding.

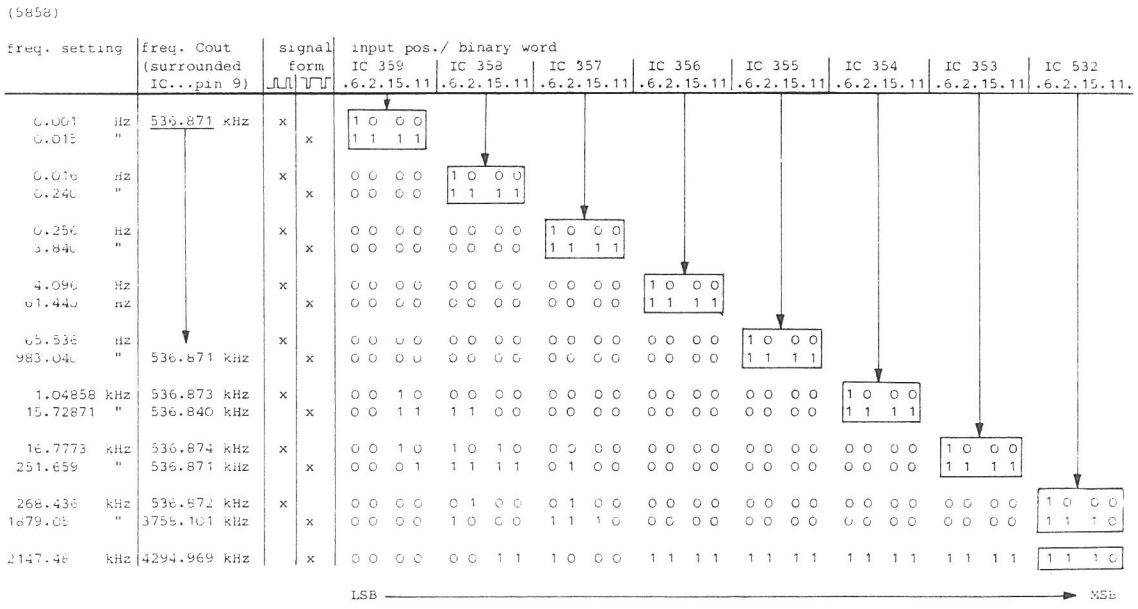

Fig. 13 Logic table for the accumulator

4.5.2. Complementer 1, sine/triangle selector, complementer 2

The accumulator output bits 1 - 9 are transformed to a triangle number sequence in complementer 1. Both complementers are designed with exclusive-OR gates. The signals are synchronously processed (D-flip-flops). The generated triangle number sequence is fed to a "SIN-ROM" as an address, the output values (=sine) of which are fed simultaneously with the triangle number sequence to a function-selector (pos. 382, 383).
The "SIN-ROM" is a quarter-sine period as number-value table (256 x 8 bit).

The chosen sine or triangle number sequence is fed synchronized to the complementer 2 (pos. 379, 380).

The finished number sequence is available at the output of pos. 375, 376 and 370 pin 15. The MSB signal (10th bit) is sent to the delay line compensator in the D-flip-flop pos. 370. In spite of being synchronized, time differences can trigger glitches in the DAC. The critical point is the signal zero crossing because then all bits alter their states. To minimize and balance non-compensatable zero glitches, the cycle-retarding sections 621, 622 and also 528 and 529 may be altered. For this reason it is necessary to replace IC 380 - 382/U2 by original type SN 7408.

4.6. DIGITAL TO ANALOG CONVERTER

The DAC (fig. 43) is a fast one (25 ns) with high output amplitude (12 Vss), designed with discrete components.

The principle of converting binary data into an analog signal is shown in fig. 14. In this way it was made use of the "R-2R ladder" network which works as follows:
If one "leg" of the ladder is connected to the reference voltage by means of a switching transistor and the remaining "legs" are grounded, a current is produced in the first mentioned leg and flows through the ladder, being divided by a factor of two at each junction. The current contribution from the actual "leg" (e.g. bit) at the summing output of the DAC in thus binary-weighted in accordance with the number of junctions through which it passes; hence the least significant bit is on the far left of the network.

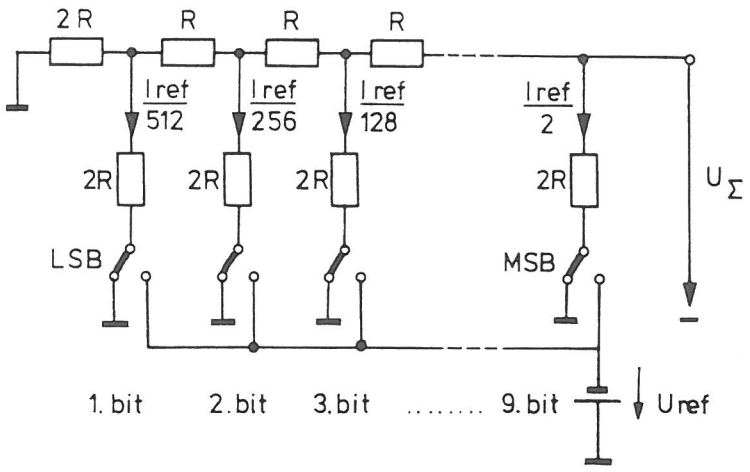

Fig. 14 Simplified binary R-2R ladder DAC

The DAC mainly consists of 9 AND-gates (380 - 382) with corresponding input transistors 302 - 310, positive current source 312 - 320 with emitter follower 311 for temperature compensation and negative current source 312 - 320 with emitter follower 321.
As the 9 bits are lead via a cable from U2 to U1, they are regenerated by the gates 380, 381, 382 on U1. Furthermore the U2 interference level is cut off.

During TTL-low level at the selected gates 380 - 382 the input transistor of the ADC becomes active and a current of ca 15 mA flows via emitter resistor; so the positive current source (10 mA) is switched off, resulting in a current of -5 mA from the negative current source at the selected junction of the "R - 2R ladder".

During TTL-high level the input transistor becomes currentless resulting in a summing current of the positive current source (10 mA) and negative current source (-5 mA) at the junction. The current value at each of the 9 single junctions is equal and the influence to the output voltage of the DAC decreases dual stepped. Propagation delay time is compensated by capacitors 521 - 525. The 4 most significant bits are equipped with high precision resistors of 0.5 % and 0.1 % and must not be replaced by types of higher tolerances.

The "deglitching" is achieved by altering the switching instant of the transistors pos. 302 - 310 with the trimming potentiometer pos. 602. The DAC has a metalized screening sheet to minimize pick-up of interference signals.

4.7. LOW-PASS FILTER

The output signal of the DAC passes a low-pass filter for cutting off the spectral interference components. It is designed as Butterworth filter of the 5th order with fu = 3 MHz and response down of 45 dB/octave. It is terminated on both input and output sides. The amplitude decreasing at 2 MHz, which is recognizable from the synthesizer theory, is compensated by the lead element (541, 599; 697) between filter and amplifier.

4.8. SQUARE WAVE GENERATOR (fig. 43)

The signal is coupled out via buffer amplifiers (331, 332, 356, 357) and is fed to the AM-modulator and to the square wave generator. The buffer amplifier 331, 332 suppresses reactions of the high speed differential comparator 361 on the input signal.
The low-pass (LP) pos. 610 and 586 reduces the interference spikes of the signal. This is specially important for eliminating interference (of NE 521) at slow frequencies - then multiple impulses appear in the neighbourhood of the switching point. The LP limit frequency (f_{3dB} = 150 kHz) is chosen so that at 2 MHz ($\approx$ -23 dB signal amplitude against Upp at 10 kHz) the symmetric fault stays within the tolerance.

In addition hysteresis of NE 521 is increased by resistor 847. Adjusting the switching level of the comparator is possible with potmeter 701 (spuare wave symmetry).

The generated square signal is transmitted via power gates 362 to the TTL output and to the square-wave decoupling-amplifier 333. The TTL output is protected against short-circuit to signal ground and +5 V by a 10 Ohm series resistor.

4.9. SQUARE WAVE PRE-AMPLIFIER (fig.43)

With the aid of the pre-amplifier the square wave signal (0..+5 V) which is on the TTL level is cut off from the underlying dc (pos.713 dc-offset) and adjusted to an amplitude of 12 Vpp (pos.708). The square wave signal can be switched to the signal output line via the decoupling stage 337, 338; this occurs via relay pos.865 and 861. With adjusted sine, triangle, or AM signal, the lead to the square wave pre-amplifier is connected to frame with a decoupling capacitor (pos.587) via the relay pos.864, to eliminate capacitive coupling-in of the edges of the square wave signal. The wave form is selected by relays which are set to OV via the I/O port 378 and the buffer 365.

4.10. AMPLITUDE MODULATION (fig.43)

The amplitude modulation is effected in the balanced modulator IC-component MC1496. The $\sim$ respectively the $\sim$ carrier signal is fed AC-coupled to the input pin 8, the external modulation signal is present dc-coupled at the input pin 1 (input amplifier pos.360, 716, 717). The maximum amplitude of the carrier frequency is obtained at m = 100% and must not be larger than the maximum amplitude at the normal operation mode; this means a reduction of the carrier amplitude to half the value (Vac/2) for AM operation and m = 0%. The exact value Vac/2 is adjusted with the potentiometer 729. The coupling out of the signal takes place symmetrically at pins 6 and 12 with the difference carrier pos.339, 340. The dc-offset is adjusted by varying the current source 341 with pos.738.

4.11. BUFFER AMPLIFIER, AMPLITUDE CONTROL, COMPENSATION (fig.43)

The signal is high-ohmically coupled with the transistor 343 and is present low-ohmically at the emitter of the transistor 342. The wiring of the transistors 342, 344, 345 is a "white" emitter circuit, which shows a specially small distortion of the signal when load current alterations and a low output impedance occur. Adjustment of DC-balance is possible by potmeter 750.

This low-ohmic signal voltage is converted with C-compensated resistors to a current. The currents through the three greatest resistors (768 - 774) are overcompensated by capacities and are corrected by the phase compensation circuit ($V \approx -1/5$) pos.346, 347 and aligned with pos.558.

On account of the 8 dual-stepped current controlling resistors there are $(2^8 - 1) = 255$ different possibilities of combination. The maximum resolution of the displays is "1" of "199", so that the possible combinations are not all used. The necessary control of the relays is effected by the processor via I/O ports.

4.12. DC GENERATOR

The dc-generator is controlled via the microprocessor I/O expander lines, by which the dynamically transmitted data are stored in the I/O-port 377. The statical control data are fed to the 10 bit DAC (AD7530) via latch components for decoupling (pos. 371, 372). In the actual circuit only 8 bits are active (2 bits are inhibited).

The AD7530 operates with the decoupling amplifier 384 and the OP-follower 364 which then feeds current to the output amplifier via the resistors 715, 792.
The reference voltage of ± 10 V needed for the DA-converter at pin 15 is generated by the circuit pos.368, 383 and 369. The inverting summing amplifier 369 receives positive current via resistor 784 and additionally a negative current for the dc-polarity.
The exact adjustment of the "+" reference voltage occurs with 779, the "-" reference voltage with pos. 849.

4.13. OUTPUT AMPLIFIER, ATTENUATOR

The power amplifier mainly consists of a voltage amplifier, output stage and the attenuator. Via the AMPLITUDE control the level of the selected signal is applied to the voltage amplifier 348 - 351 which operates as a complementary cascode stage in pull-push arrangement to drive the power output. The output stage comprises 352/354 and 353/355 and operates with complementary darlingtons. Feedback is done via resistor 817 with parallel capacitor 559 to the input of the voltage amplifier. Gain adjustment is possible by altering the resistor 790.
The diodes 414, 415 are inserted for overload protection at maximum square wave amplitude or maximum dc-offset and short circuit at the output. The attenuator (0, 20, 40 dB) is controlled via reed-relays, which are set via gates and I/O-ports by the microprocessor. The capacitor 595 suppresses interference signals.

4.14. POWER SUPPLY (fig.20)

The voltages of ± 20 V and twice +5 V are generated by 2 adjustable and 2 fixed voltage regulators. The +5 V voltage regulator for the keyboard and display units is connected to a separate transformer winding. On account of this all interferences the sphere of the display control are seperated from the remaining circuit sections.

The +20 V and -20 V regulators are equipped with by-pass resistors (843 - 845). For convenient fault finding of short circuits e.g. it is possible to open solder joints A - E. In this case first open solder joints A, B before opening D, E. The outputs of the regulators 374, 375 must be loaded with 1 kOhm. Positive voltage (+20 V) is adjusted by 833 and -20 V by means of 836 to an accuracy of ± 0.1 V.

5. ACCESS TO PARTS

Before dismantling the instrument, the safety regulations in accordance with paragraph 2.2. must be strictly observed.

5.1. CABINET, see 2.5.

5.2. PUSHBUTTONS

For changing knobs for pushbuttons it is not necessary to remove the textplate or demount the cabinet. You must hook only two fingernails behind the lower part of the knob and then pull quite carefully.

5.3. TEXT PLATE

- Remove the cabinet, see 2.5.
- Remove the plastic cover of the mains switch.
- The text plate can now be pulled of (it is fitted with three points double sided adhesive tape).

5.4. UNIT 1, analog print

- Remove the cabinet, see 2.5.
- Remove the 4 screws in the corners of the upper pcb.
- The analog print can now be lifted from the four angle brackets.
- During this action the three cable with CIS-connectors must be detached from the lower side of the print.

- After removing the screws and disconnecting the cables the printed board can be set vertically into the slots of the two rear angle brackets.
- If you want to operate the instrument in this condition, you should use cable adapters to lengthen the cables between unit 2 and unit 1. These cables are no options and not purchasable. Build yourself such a cable-adapter, it is a very simple task.

5.5. UNIT 2, digital print

- Remove the cabinet, see 2.5.
- Remove the analog print unit 1, see 5.4.
- All parts of unit 2 are now within easy reach and easy interchangable.

5.6. UNIT 3, display card; UNIT 4, keyboard card

- Remove the cabinet, see 2.5.
- Remove the plastic cover of the mains switch.
- The text plate can be removed now (it is fitted with three points double sided adhesive tape).
- Demount unit 1, see 5.4.
- Remove the voltage regulator from the left hand side of the frame (pay attention of the mica washer).
- Desolder the red wire from point 58 on unit 2.
- Remove the four screws in the corners of the front plate (cross headed screws).

- Remove front plate and front frame with the printed card boards U3 and U4. During removing the 30 pol. CIS-connector between U2 and U3 is disconnected (be careful!).

- For demounting the display card unit 3, remove the five hexagonal units which are visible at the wired side of the printed board.

- Now the display card unit 3 is only held with two CIS-connectors to the front plate with the keyboard print U4.

- Pull out the print U3; all parts of this card are now accessible.

The replacement of a complete switch (pushbutton) requires furthermore the following actions:

- Loosen the two hexagonal units and the thread spacing piece on the printed board unit 4.
- Now the switches of unit 4 can be removed easily.

5.7. FUSE, mains transformer

As from series /05 onwards the fuse is mounted at the rear side of the instrument, this chapter concerning the fuse is valid for instruments up to series /04 only.

- Remove the cabinet, see 2.5.
- Remove unit 1, see 5.4.
- The mains fuse is situated in the rear part at the left hand side of unit 2.
- If only the mains fuse shall be changed, the three cables with CIS-connectors must not be loosened, you can reach the mains fuse if you only lift unit 1 as high as possible.

- For selecting another mains voltage, unit 1 should be removed completely as described in chapter 5.4.
- The soldering lugs on the right hand side of the transformer must be soldered according the picture in chapter 2.3. (mains connection).

6. C H E C K A N D A D J U S T M E N T

6.1. GENERAL

The PM 5190 is an LF synthesizer with microprocessor controlled keyboard- and display functions. The microprocessor ensures high performance data processing and instrument controlling. Data from keyboard are accepted as well as data from IEC bus. These informations are checked, transformed and then used for stimulating the functional units of the instrument like display, attenuator, wave form selector or phase accumulator for setting the frequency. In case of misoperating, incompatible settings of input values, the microprocessor initiates the LED-display to start flashing.

6.2. OVERALL FUNCTIONAL TEST

Using the PM 5190 it sometimes may happen that it shows unintelligible reactions. To understand them it is very important to be familiar with the instrument and its operation. But if you are familiar with the instrument and if it shows strange behaviours although you have done the operation very carefully, the instrument might be defective.
The first thing you have to do in every case when you have got a defect in your instrument, is to switch it off and check it on physically damages like broken wires, unplugged connectors or burnt resistors.
In this respect you should also check the mains fuse and the wiring of the mains transformer to ensure proper mains supply. In case you didn't find visible damages or disconnected mains supply, you should check the supply voltages on Unit 1 and Unit 2 according to the values of the table "check and adjustment". Don't forget that there are two +5 V supply voltages, for the digital print and for the analogue part of the instrument. If the supply for the digital print is too bad (below +4.75 V), you should change this voltage-regulator because it is possible, that read errors of the program memory causes a very strange function of the instrument.
We would also advise you to perform the final checks see chapter 6.5.

6.3. DIAGNOSTIC PROGRAM

Attaining this point in reading the diagnostic instruction, you have checked the instrument on visible physically damages and you have checked all supply voltages. If your PM 5190 isn't yet running and is still showing failures, you should switch it off, disconnect it from the mains and then change the built-in program memory with the diagnostic PROM to check each functional unit particularly. Figure 44 shows you where the program memory is to find (pos.334) and in which way you have to fit the PROM's.

After you have changed the normal program with the diagnostic program, reconnect all cables to Unit 1, the instrument to a socket and then push the power-switch.
The diagnostic program immediately starts to test the processor-internal RAM-places. As you know, the 8035 microprocessor presents the user a read/write memory of 64 bytes. During this test, an indication '10' is shown in the frequency display. After successful completion of the RAM-test, the indication '10' changes into '00'. In case that bad RAM-places are detected to be defective, the diagnostic program initiates the frequency display to start flashing and before you are going on to test the PM 5190, the processor-chip should be replaced by a better one.
For the following tests of the functional units the processor with its RAM-places is assumed to be okay.
The LED of the frequency display shows '00' as a request for input of one of the following codes for selecting a subunit test program.

11 keyboard testprogram
12 display test
13 display flashing test
14 decimal point test
15 LED-test
16 I/O ports set to 1
17 I/O ports set to 0
18 signal-test (f = 1 kHz, Vacpp = 1 V, Vdc = 0, sinewave)

INPUT 11 - keyboard test -

Co-ordinates for keyboard-test

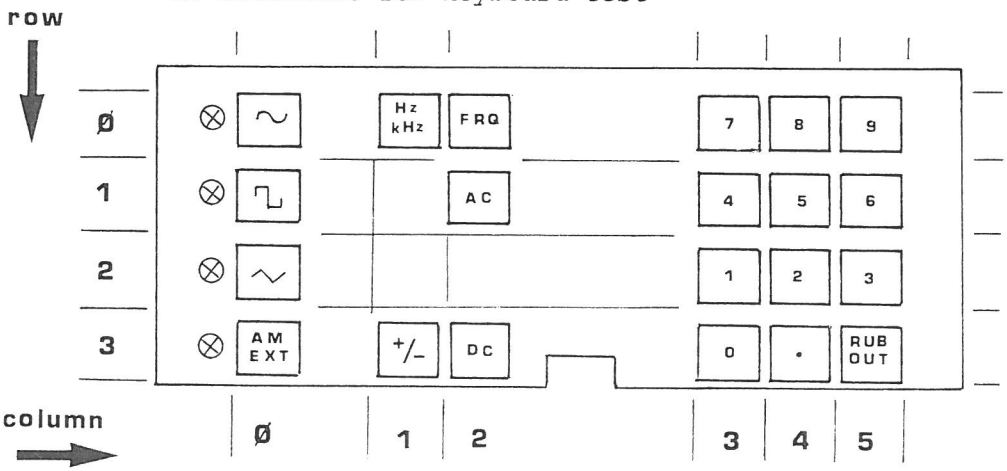

After the code 11 has been keyed in, it appears in the two rightmost positions of the frequency display. The first and second position of this display field now indicates '00' which are the co-ordinates of the first key to be pushed. Looking to the picture above you'll see that the pushbutton for selecting the sinewave is that one with co-ordinate '00'. The first digit in this co-ordinate-indication represents the row, the second digit the column.

If you press the key that is asked for and if this key is working properly, the next co-ordinate appears which is '01'. But if the just pressed key does not work properly, the indication starts flashing. To ensure, that no misoperating is the reason for this error-indication, you should repeat test program 11 quite slowly and carefully. The last key which you have to press for this test is RUB OUT with the co-ordinate '35'. After this key was pushed and after the diagnostic program has checked it, the co-ordination indication disappears and the frequency display shows '00' in the positions 4 and 5 as a request for a new program selection.

INPUT 12 - display-test

The indication '00' disappears, each number-position of the display shows a 0. After appr. 2 s the zeros will change to a 1, after another 2 s to 2 etc. until all number-positions show a 8. After appr. 2 s these indications will extinguish and all segments of the first displayposition start lighting for appr. 0.5 s, then all segments of the second position, after another half a second all segments of the third position.... until all segments of the last display position are lighting for appr. half a second. After this the program returns back to the monitor and the display shows '00' to request a new input.

INPUT 13 - flash-test

The indication '00' disappears, the display is erased and the diagnostic program initiates the display to start flashing all segments of each display position. So you can see the indication 8888...switched on and off in cycles of appr. 0.5 s. After about 10 s the program stops flashing the display and returns back to the monitor. The indication '00' appears again as a request for a new input.

INPUT 14 - decimalpoint-test

Keying in the code 14, the test program checks the decimal points of the LED-display. The test program initiates the decimal point lighting going from left to right with a rhythm of about 0.5 s, starting at the leftmost display position of the frequency display. The decimal point behind the sixth frequency position is skipped as well as those behind the third ac- and dc-position. According to the normal use of the PM 5190, the decimalpoints of the ac- and dc-section are coupled by two. After the last decimalpoints were initiated to light, the program returns to the monitor with the indication '00' in the frequency display.

INPUT 15 - LED-test

This part of the diagnostic program checks the four LED's at the frontpanel of the PM 5190. Keying in code 15 effects the lighting of each LED in a sequence beginning with the upper one. Each of them will light for appr. 0.5 s. After the LED beside the "AM EXT" key was lighting, the program returns back to its monitor with changing the indication 15 in the frequency display back to '00' which is the request for a new input.

INPUT 16 - I/O ports = 1

By means of this diagnostic part each bit of each I/O port on the digital- and analog print is set to '1'. This is very useful if you would like to check the outputs of the I/O expand ports. Each of the 80 bits of the I/o-expander must be at logical '1'. If you find a bit that is not, this port has got a failure.
The display of the PM 5190 shows - when this test is switched on - all decimal points and the four LED's beside the wave form keys lighting. The frequency display shows the code 16 as an indication for this subunit test program.
To switch off this test, a '0' must be keyed in.
The program will then return to the monitor, the indication will be '00' as request for an input and all expand-port outputs will change back to logical '0'.

INPUT 17 - I/O ports = 0

This sub-testprogram sets all expand port outputs to logical '0'.
According to test 16 you should take an oscilloscope and check all 80 output bits of the five expand ports. If you find an output being logical '1' you have to replace this port. When this test is switched on, only the indication in the frequency display has changed from '00' to '17'.
To switch off this test the key '0' must be pressed. The program will then return to its monitor and show '00' in the frequency display.

INPUT 18 - signal test

This subtest effects the setting of frequency, amplitude, dc-offset and waveform for checking the function of subunits that are necessary for producing waveforms but not checked with another testprogram.
Keying in the code 18, it appears in the frequency display as an identification that this test is switched on. Furthermore you can see the indication '1' in the leftmost position of the frequency display which means, that the output frequency is set to 1 kHz. The amplitude is set to 1 Vpp, the dc-offset is +1 V and the sine-wave is switched on.
To switch off this subtest, push the '0'-key. The program returns to its monitor and the indication in the frequency display changes to '00' as request for an input.

6.4. ADJUSTMENTS

In the last chapter we have given you a complete description of operating the diagnostic-program. With this knowledge it might be easy for you to localize a defect in your instrument.
After you have eliminated the defect, it might be useful to check the instrument completely and - if it is necessary - to adjust it. Therefore the diagnostic-program should be replaced by the PROM with the working-program, the following chapter will show you what is to do then.
The limits mentioned in this paragraph are valid only for a newly adjusted instrument and therefore might deviate from the values as stated in paragraph 1.2. "Technical Data".
Adjustment of the instrument is only permitted after a warm-up time of at least 30 minutes at an ambient temperature of (+23±3)°C and when connected to a mains voltage of 220 V±10%. The cabinet must be closed.
If not explicitely stated otherwise, the voltage potentials refer to the relevant contact measured against circuit earth (⊥).

6.4.1. Crystal-oscillator

- The nominal frequency of the crystal oscillator is 8.589934 MHz.
- Set the instrument to frequency 1000 kHz, amplitude 1 Vpp, dc-offset 0 V.
- Connect a counter/timer to the output socket, adjust the frequency with trimming capacitor 505/unit 2 to 1000 kHz ±0.2 Hz.

6.4.2. Power supply

Secondly you should test all supply voltages of the instrument.

		testpoint
+20 V....+20.1 V	adjustable with R 833 on Unit 1	solder joint A
-20 V....-20.1 V	adjustable with R 836 on Unit 1	solder joint B
+ 5 V....±0.25 V	Unit 1 } not adjustable,	+ C573
+ 5 V....±0.25 V	Unit 3 } fixed regulators	

Note:
When opening solder joints, the outputs of the regulators 374, 375 must be loaded with 1 kOhm. Furthermore first open solder joints A, B before you open solder joints E, D.

6.4.3. Glitches, distortion

The next point is the adjustment of glitches. Set the instrument to frequency 50 kHz, amplitude 19.9 Vpp, dc-offset 0 V, wave form "∿".

- Connect the oscilloscope to R695/R697 and the distortion meter to the output socket (terminate with 50 ohms). Adjust glitches and distortion to minumum ($k < 0.3\%$) with trimpot R602.

6.4.4. Amplitude, dc-offset, waveform

- Set the instrument to frequency 1 kHz, amplitude 19.9 Vpp, dc-offset 0 V, waveform "~".
  Connect DVM (a.c.) to the output socket (terminated with 50 ohms) and adjust with trimpot R608 to 3.52±0.02 Vrms.
- Set PM 5190 to waveform "⊓⊔" and adjust the amplitude with trimpot R708 to 4.97±0.03 Vrms.
- Set the instrument to waveform " ~ ,AM" and adjust the amplitude with trimpot R729 to 1.76±0.02 Vrms.

- Set PM 5190 to waveform "~", connect the digital voltmeter (d.c.) to R685 and adjust dc-offset to 0 V±0.5 mV with trimpot R615.
  Connect the voltmeter (d.c.) to R839/R700 and adjust dc-offset to 0 V±0.5 mV with trimpot R839.
  Connect the voltmeter (d.c.) to emitter of transistor 342 and adjust the dc balance with potmeter R750 to 0 V±0.5 mV.

- Set the instrument to waveform "⊓⊔", the DVM is connected to the same measuring point and adjust dc-offset with trimpot R713 to 0 V±0.5 mV.
  Connect a counter/timer to the TTL output socket and adjust 50% square wave symmetry to time interval 500±2 µs with trimpot R701.
  Connect the oscilloscope to the TTL output (not terminated) and check the logic level: high +4 V...+5 V, low 0...+0.5 V.
- Set PM 5190 to amplitude 10.0 Vpp, waveform "~". Connect DVM (d.c.) to the output socket (not terminated) and adjust dc-offset of the power amplifier with trimpot R794 to 0 V±0.5 mV.
- Set PM 5190 to frequency 1 kHz, amplitude 19.9 Vpp dc-offset 0 V, waveform " ~ ,AM". Connect the DVM to the output socket (not terminated) and check dc-offset 0±100 mV. If necessary alter value of resistor R738.

- Set PM 5190 to frequency 100 kHz, amplitude .002 Vpp, dc-offset 0 V, waveform "⊓⊔". Connect the oscilloscope to resistors 815/816, adjust overshoot with trimming capacitor 558 to <3%.
- Change amplitude of PM 5190 to 6.4 Vpp, connect the oscilloscope to the output socket and terminate with 50 ohms. Adjust to minimum overshoot with trimming capacitor 559.
- Set PM 5190 to frequency 2000 kHz, amplitude 19.9 Vpp, dc-offset 0 V, waveform "~". Connect DVM (a.c.) to the output socket and adjust with trimmer 599 to 3.45±0.02 Vrms.

- For final adjustment of dc-offset see chapter 6.5.1.

6.4.5. DC-generator

- Set the instrument to frequency 1 kHz, amplitude 0.00 Vpp, dc-offset -0.00 Vdc, waveform "~".
  Connect the DVM (d.c.) to the integrated circuit pos. 370 pin 15, adjust to -10±0.02 Vdc with trimpot R779.
- Set PM 5190 to dc-offset +0.00 Vdc and check a voltage of +10±0.02 Vdc at the same test point. If necessary the value of resistor 842 must be altered. In this case repeat sequence before.
- Set PM 5190 to dc-offset -9.9 Vdc, connect the DVM to the output socket (not terminated) and check the dc-output voltage -9.9 V±50 mV
  If necessary alter value of resistor R792.

6.4.6.

The following table may be used in combination with a controller

FREQUENCY	Vacpp	Vdc	WAVE FORM	MEASURING VALUE (output socket)	COMMENT
1. Wave form (output terminated with 50 ohms)					
1 kHz ↓	19.9	0	∼	3.52 Vrms ±0.02 Vrms	This value is adjustable with R 608 (measurement may be done by means of a DVM (e.g. Fluke 8920A). Adjustment with R 708
	19.9	0	∼	2.87 Vrms ±0.02 Vrms	
	19.9	0	⊓	4.97 Vrms ±0.03 Vrms	
2. AM-MOD.					
1 kHz	19.9	0	∼ AM	1.76 Vrms ±0.02 Vrms	Adjustment with R 729
1 kHz	19.9	0	∼ AM	1.435 Vrms ±0.025 Vrms	
3. Frequency response (output terminated with 50 ohms)					
1 kHz	19.9	0	∼	3.52 Vrms ±0.05 Vrms	Measurement may be done by meams of a digital voltmeter (e.g. Fluke 8920A).
100 kHz	19.9	0	∼	3.52 Vrms ±0.05 Vrms	
500 kHz	19.9	0	∼	3.52 Vrms +0.05 Vrms -0.10 Vrms	
100 Hz	19.9	0	∼	3.52 Vrms +0.05 Vrms -0.15 Vrms	
2 MHz	19.9	0	∼	3.52 Vrms +0.05 Vrms -0.15 Vrms	Adjustment with C 599
1 kHz	3.2	0	∼	0.566 Vrms ±8 mVrms	
100 kHz	3.2	0	∼	0.566 Vrms ±8 mVrms	
500 kHz	3.2	0	∼	0.566 Vrms ±12 mVrms	
1 MHz	3.2	0	∼	0.566 Vrms ±12 mVrms	
2 MHz	3.2	0	∼	0.566 Vrms ±12 mVrms	
1 kHz	.20	0	∼	35.3 mVrms ±0.5 mVrms	
100 kHz	↓	0	∼	35.3 mVrms ±0.5 mVrms	
500 kHz		0	∼	35.3 mVrms +0.5 mVrms -1.4 mVrms	
1 MHz		0	∼	35.3 mVrms ±1.4 mVrms	
2 MHz		0	∼	35.3 mVrms +0.5 mVrms -1.7 mVrms	
4. DC-generator					
0 ↓	00.0 ↓	±9.9		±9.9 V ±0.1 V	Adjustment with R 779, values are measured without 50 ohm terminator.
		±6.4		±6.4 V ±0.1 V	
		±3.2		±3.2 V ±0.08 V	
		±1.6		±1.6 V ±0.04 V	
		±0.8		±0.8 V ±0.02 V	
		±0.4		±0.4 V ±0.01 V	
	0.00	±0.2		±0.2 V ±0.005 V	
	0.00	±0.1		±0.1 V ±0.003 V	Basic-offset
	.000	± .05		± 50 mV ±1.5 mV	
	.000	± .005		± 5 mV ±1 mV	

FREQUENCY	Vacpp	Vdc	WAVE FORM	MEASURING VALUE (output socket)	COMMENT
5. Frequency accuracy					
3.84 Hz				260416.66 µs ±0.2 µs	These tolerances are effective for a deviation of the crystal-frequency = 0 (f = 8.589934 MHz). The temperature coeffizient is 8 Hz/°C. Take the TTL-OUT socket for these frequency measurements.
4.096 "				244140.6 µs ±0.2 µs	
4.097 "				244081.03 µs ±0.2 µs	
4.111 "				243249.6 µs ±0.2 µs	
4.112 "				243190.6 µs ±0.2 µs	
4.336 "				230627.3 µs ±0.2 µs	
61.440 "				16276.04 µs ±0.02 µs ±0.12 µs	
65.535 "				15259.02 µs ±0.01 µs ±0.12 µs	
65.536 "				15258.78 µs ±0.01 µs ±0.12 µs	
938.04 "				1066.053 µs ±0.001µs ±0.12 µs	
1.04857 kHz				±0.01 Hz	The signal-quantization implies a statistical jump by a clock period of about 120 µs.
1.04858 "				±0.01 Hz	
15.7287 "				±0.01 Hz	
16.7773 "				±0.1 Hz	
251.659 "				±0.2 Hz	
268.436 "				±0.2 Hz	
1879.05 "				±2 Hz	
2147.48 "				±2 Hz	
6. Frequency spectrum (output terminated with 50 ohms)					
1 kHz	19.9	0	∼	k < 0.3%	Use distortion and spectrum analyzer
50 kHz	19.9	0	∼	k < 0.3%	
500 kHz	19.9	0	∼	k < 1.0%	
2 MHz	19.9	0	∼	k < 1.5%	
2 MHz	19.9	0	∼	≤ -47 dB	non-harmonic components
2 MHz	0.2	0	∼	≤ -35 dB	non-harmonic components
1 MHz	19.9	0	⊓	t_r < 50 ns / t_f < 50 ns	Correct with 528/529 on U2
7. AM-MOD. EXT. (output terminated with 50 ohms)					
1 kHz	10.0 V	0	∼	0.884 ± 0.017 Vrms	Apply external sine wave signal to input AM EXT: U_{mod} = 300 mVpp; f_{LF} = 1 kHz " " " = 20 kHz " " " = 20 kHz U_{mod} = 900 mVpp; f_{LF} = 1 kHz " 2 " " = 1 kHz
1 MHz	10.0 V	0	∼	0.884 ± 0.05 Vrms	
2 MHz	10.0 V	0	∼	0.884 ± 0.067 Vrms	
200 kHz	10.0 mV	0	∼	m = 30% ± 3% (-16.5 ± 0.9 dBc)	
200 kHz	10.0 "	0	∼	30% ± 3%	
2 MHz	10.0 "	0	∼	30% ± 4% (-16.5 ± 1.2 dBc)	
200 kHz	10.0 "	0	∼	m = 90% ± 3%	
90 kHz	10.0 "	0	∼	90% ± 2%	
8. Square wave, overshoot (output terminated with 50 ohms)					
100 kHz ↓	19.9	0	⊓	overshoot < 3% ↓	
	12.8	0	⊓		
	06.4	0	⊓		
	03.2	0	⊓		
	1.60	0	⊓		
	0.80	0	⊓		
	0.40	0	⊓		
	1.99	0	⊓		
	0.199	0	⊓		
9. TTL-out					
1 kHz	0	0	∼	H-level +4V...+5V L-level 0V...+0.5V	TTL output not terminated

6.5. FINAL CHECK AND ADJUSTMENT

6.5.1. DC-offset

When adjustment procedure of chapter 6.4.4. and 6.4.5. is finished it's possible to do the final dc-adjustment.

- Set PM 5190 to frequency 1 kHz, amplitude 19.9 V, dc-offset 0 V, waveform "∼".
  Connect DVM (d.c.) to the output socket (not terminated). Adjust with trimpot R615 to 0±20 mV.
- Change waveform to "⊓" and adjust dc-offset with trimpot R713 to 0±20 mV.
- Change waveform to "∼ ,AM" and check dc-offset 0±100 mV. If necessary alter value of resistor R738.

6.5.2. Noise level, distortion and square wave

- Set the instrument to frequency and amplitude zero, waveform "∼".
  Connect a wide-band oscilloscope (100 MHz) to the output socket (terminate with 50 ohms). The noise level must be <1 mVpp.
- Set PM 5190 to frequency 1 kHz/50 kHz, amplitude 19.9 Vpp, dc-offset 0 V, waveform "∼".
  Connect distortion meter to the output socket (terminate with 50 ohms). Distortion must be < 0.3%. Change frequency to 500 kHz and check k<1%.
- Set PM 5190 to frequency 1 MHz/1 kHz, amplitude 19.9 Vpp, dc-offset 0 V, waveform "⊓".
  Connect the oscilloscope to the output socket (terminate with 50 ohms). The rise and fall time must be < 50 ns.
- Set PM 5190 to frequency 100 kHz, amplitude 19.9/12.8/6.4/3.2/1.6/0.8/0.4 Vpp, dc-offset 0 V, waveform "⊓". Terminate with 50 ohms and check overshoot < 3%.

6.5.3. AM modulation

- Set the instrument to frequency 200 kHz, amplitude 0.1 Vpp, waveform "∼ , AM".
  Connect an external sine wave signal of 900 mVpp to the BNC-socket at the rear. Connect modulation meter to the output socket (terminate with 50 ohms). Check that AM modulation is 87%...93%.
- Decrease amplitude of external modulation signal to 300 mVpp and check that AM modulation is 27%...33%.

6.5.4. Non-harmonic components

- Set PM 5190 to frequency 2 MHz, amplitude 19.9 Vpp, dc-offset 0 V, waveform "∼".
  Connect spectrum analyzer to the output socket (terminate with 50 ohms), use external 20 dB attenuator and check non-harmonics are ⩽ -47 dB.
- Change amplitude to 0.2 Vpp and check non-harmonics are ⩽ -35 dB. If necessary the value of capacitors C528/C529 on unit 2 may be altered.

6.5.5. Functional check of the instrument

Switching the PM 5190 off and on again sets all display indications to 0, the LED beside the sine-wave pushbutton lights as well as the Hz-indication. Now push the key "FRQ", the following input digits will appear in the frequency display-field. Key in "123.456", these digits must appear in the frequency field.
If you push the 'RUB OUT' key once, the 6 disappears from the frequency display.
Pushing the Hz/kHz key once switches from Hz to kHz, which is indicated by the lamp beside kHz, that one beside Hz is extinguished.
Push the key 'AC' and key in 7.9. The ac-display-field must show 07.9.
Push the key 'DC' and key in the value 6.9. The dc-display-field must show 06.9, furthermore the ac- and dc-display-field start flashing.
Pushing the 'RUB OUT' key once stops flashing immediately.
If you then push the key '∿', the red LED beside this waveform key lights and the frequency display field starts flashing.
Now push the black key 'AM EXT'. The red lamps beside this key and '∿' are lighting, the frequency display field is still flashing.
Push the key '⊓'. The red lamp beside this key lights and the frequency display field stops flashing.
Pushing the key '+/-' changes the sign of the dc-offset field.

6.5.6. IEC bus check

Connect your PM 5190 to any IEC bus talker (e.g. test box or IEC-controller). Set the instrument to remote-state (the IEC addr. is "4").
Now send the following parameters via IEC bus to the instrument: "F123.456W3A19.4D-02ETX" which means a frequency of 123.456 kHz (you remember that frequency definitions in remote control mode are always done in kHz), triangular waveform, an amplitude of 19.4 Vpp with a dc-offset of -0.2 V. The frequency indication should start flashing now because of the frequency is greater than 100 kHz with triangular waveform. Check, that no input via keyboard is possible.
Disconnecting the PM 5190 from IEC bus must return it from remote to local mode.

6.6. SAFETY INSPECTION AND TESTS AFTER REPAIR AND MAINTENANCE IN THE PRIMARY CIRCUIT

6.6.1. General directives

- Take care that creepage distance and clearances have not been reduced
- Before soldering, wires:
  should be bent through the holes of solder tags, or wrapped round the tag in the form of an open U, or, wiring ridigity shall be maintained by cable clamps or cable lacing.
- Replace all insulating guards and -plates.

6.6.2. Safety components

Components in the primary circuit may only be renewed by components selected by Philips, see also chapter 7.1.

6.6.3. Checking the protective earth connection

The correct connection and condition is checked by visual control and by measuring the resistance between the protective-lead connection at the plug and the cabinet/frame. The resistance shall not be more than 0.5 Ω. During measurement the mains cable should be moved. Resistance variations indicate a defect.

6.6.4. Checking the insulation resistance

Measure the insulation resistance at U = 500 Vdc between the mains connections and the protective lead connections. For this purpose set the mains switch to ON. The insulation resistance shall not be less than 2 MΩ.

Note:
2 MΩ is a minimum requirement at 40 ^{o}C and 95 % relative humidity. Under normal conditions the insulation resistance should be much higher (10 to 20 MΩ).

7. SPARE PARTS

7.1. GENERAL

Standard Parts
Electrical and mechanical parts replacement can be obtained through your local Philips organisation or representative. However, many of the standard electronic components can be obtained from other local suppliers. Before purchasing or ordering replacement parts, check the parts list for value, tolerance, rating and description.

NOTE:
Physical size and shape of a component may affect instrument performance, particularly at high frequencies. Always use direct-replacement components, unless it is known that a substitute will not degrade instrument performance.

Special Parts
In addition to the standard electronic components, some special components are used:

- Components, manufactured or selected by Philips to meet specific performance requirements.
- Components which are important for the safety of the instrument, marked with 'S' in the parts list.

ATTENTION:
Both type of components may only be replaced by components obtained through your local Philips organisation.

7.2. STATIC SENSITIVE COMPONENTS

This instrument contains electrical components that are susceptible to damage from static discharge. Servicing static-sensitive assemblies or components should be performed only at a static-free work station by qualified service personnel.

7.3. HANDLING MOS–DEVICES

Though all our MOS integrated circuits incorporate protection against electrostatic discharges, they can nevertheless be damaged by accidental over-voltages. In storing and handling them, the folowing precautions are recommended.

CAUTION:
Testing or handling and mounting call for special attention to personal safety. Personnel handling MOS devices should normally be connected to ground via a resistor.

7.4. PARTS LIST PM 5190

7.4.1. Mechanical parts, miscellaneous, parts not on units

Item	Fig.	Quantity	Order number	Description
1		1	5322 447 44009	Cover, grey
1		1	5322 447 40049	Cover, brown
2		4	5322 462 44174	Foot (bottom side), grey
2		4	5322 462 10222	Foot (bottom side), black
3	33	2	5322 520 34164	Bearing bush
4	33	2	5322 530 84075	Spring
5	33	2	5322 528 34101	Ratchet
6	33	2	5322 532 54425	Ring for handle, grey
6		2	5322 532 51481	Ring for handle, brown
7	33	2	5322 498 54048	Arm for handle
8	-	1	5322 498 54051	Carrying handle
9	33	2	5322 414 64053	Knob, grey
9		2	5322 414 30043	Knob, brown
10		4	5322 462 44176	Foot (rear side)
11		1	5322 502 14164	Coin-slot screw (rear side)
12		1	4822 530 70124	Locking washer (rear side)
13		3	5322 532 54334	Insulating bush for BNC socket
14		1	5322 456 94101	Textplate, grey
15		21	5322 276 14432	Pushbutton (keyb.)
16		1	5322 414 26414	Key cap assembly, 21 caps, grey
16		1	5322 414 20083	Key cap assembly, 21 caps, brown
17		4	5322 462 34125	Print holder
18		1	5322 290 30192	Solder term. for mains cable *S
811		1	4822 253 30014	Fuse 315 mAT *S
		1	4822 253 30018	Fuse 630 mAT *S
19	35	1	5322 321 14048	Mains cable 1850 *S
20	35	1	5322 401 14275	Cable clamp *S
21	35	1	5322 325 54067	Lead through *S
22	35	1	5322 325 60119	Pull relief *S
23	34,37	3	5322 526 14034	Rohrkern/tabulator core
351,352	37	2	4822 130 41223	IC LM340 T5.0
501	37	1	5322 121 44364	Line filter FKE 250 *S see SGS 43
502	37	1	4822 121 40176	Capacitor MKC 1MU0/100 V
503,504	37	2	5322 122 44012	Capacitor foil 100n/50 V
601	37	1	5322 116 54696	Resistor 100K MR25
751		1	5322 146 34134	Mains transformer *S
24	34	3	5322 267 10004	BNC connector
25		1	5322 456 94099	Window
26	33	5	5322 255 44037	Heat sink, U1
27	33	4	5322 255 44287	Heat sink, U1
		-	5322 390 24013	Silicon paste DC 340
28		9	5322 255 44229	IC-socket, 24 pole
29		3	5322 255 44235	IC-socket, 40 pole
30		13	5322 255 40336	IC-socket, 14 pole, U3
31	44	1	5322 265 54055	IEC-bus connector
810	44	1	5322 276 14433	Mains switch *S
32		1	5322 256 34081	Fuse holder (back side) *S

*S = safety component

CAPACITORS/U1

ITEM	ORDERING NUMBER	FARAD	TOL (%)/VAL	VOLTS	REMARKS
501-509	5322 122 34041	10N	-20+50	100	CERAMIC PLATE
510	4822 124 20673	470MU		6,3	ELECTROLYTIC
511-519	5322 122 34041	10N	-20+50	100	CERAMIC PLATE
520	4822 122 31041	3P3	0,25	100	CERAMIC PLATE
521-525	4822 122 31063	22P	2	100	CERAMIC PLATE
526-534	5322 122 34041	10N	-20+50	100	CERAMIC PLATE
535-538	4822 122 31076	68P	2	100	CERAMIC PLATE
539	5322 121 50497	680P	1	250	POLYSTYRENE FOIL
540,547	4822 124 20673	470MU		6,3	ELECTROLYTIC
541	4822 122 31067	33P	2	100	CERAMIC PLATE
542,545	4822 122 30103	22N	-20+80	63	CERAMIC PLATE
543,544	4822 124 20698	22MU		25	ELECTROLYTIC
546	4822 121 40232	220N	10	100	POLYESTER FOIL
548	4822 124 20698	22MU		25	ELECTROLYTIC
549	4822 122 31243	82P	2	100	CERAMIC PLATE
550	4822 122 31069	39P	2	100	CERAMIC PLATE
551	4822 122 31061	18P	2	100	CERAMIC PLATE
552	4822 122 31054	10P	2	100	CERAMIC PLATE
553	5322 122 34107	3P9	0,25	100	CERAMIC PLATE
554	4822 122 30105	1P5	0,25	100	CERAMIC PLATE
555	4822 122 31056	2P2	0,25	100	CERAMIC PLATE
556	4822 122 30103	22N	-20+80	63	CERAMIC PLATE
557	4822 124 20945	33MU		10	ELECTROLYTIC
558,559	4822 125 50076	2-18P		300	TRIMMER
560,561	4822 122 30128	4N7	10	100	CERAMIC PLATE
562,563	4822 124 20698	22MU		25	ELECTROLYTIC
564,565	4822 122 30128	4N7	10	100	CERAMIC PLATE
566,567	4822 124 20798	3300MU		40	ELECTROLYTIC
568,569	4822 124 20698	22MU		25	ELECTROLYTIC
570,571	4822 122 30103	22N	-20+80	63	CERAMIC PLATE
572	4822 124 20783	6800MU		16	ELECTROLYTIC
573	4822 124 20677	22MU		10	ELECTROLYTIC
574	4822 122 30103	22N	-20+80	63	CERAMIC PLATE
575	5322 121 40323	100N	10	100	POLYESTER FOIL
576	5322 124 14078	1MU5		40	ELECTROLYTIC TANT
577-584	4822 122 30103	22N	-20+80	63	CERAMIC PLATE
585,595	4822 122 31168	270P	2	100	CERAMIC PLATE
586	4822 122 31316	100P	2		CERAMIC PLATE
587-589	4822 122 30103	22N	-20+80	63	CERAMIC PLATE
590	4822 124 20698	22MU		25	ELECTROLYTIC
591,597	4822 122 30103	22N	-20+80	63	CERAMIC PLATE
592	4822 122 31047	5P6	0,25	100	CERAMIC PLATE
593,594	4822 122 30128	4N7	10	100	CERAMIC PLATE
596	4822 122 31054	10P	2	100	CERAMIC PLATE
599	5322 125 54001	4-30P		50	TRIMMER

RESISTORS/U1

ITEM	ORDERING NUMBER	OHM	TOL (%)	TYPE	REMARKS
601,607	5322 116 54646	23,7K	1	MR25	METAL FILM
602,608	5322 101 14048	47K		LIN	TRIMMING POTM
603,605	5322 116 55448	4,02K	1	MR25	METAL FILM
604	5322 116 55451	487	1	MR25	METAL FILM
606	5322 116 50635	1,47K	1	MR25	METAL FILM
609,614	5322 116 54646	23,7K	1	MR25	METAL FILM
610	4822 116 51253	10K	1	MR25	METAL FILM
611	5322 116 50664	2,05K	1	MR25	METAL FILM
612	5322 116 50671	2,61K	1	MR25	METAL FILM
613,619	5322 116 54549	1,0K	1	MR25	METAL FILM
615	5322 101 14048	47K		LIN	TRIMMING POTM
616	5322 116 50557	46,4K	1	MR25	METAL FILM
617	5322 116 50636	2,74 K	1	MR25	METAL FILM
618	5322 116 50664	2,05K	1	MR25	METAL FILM
621-629	5322 116 54496	200	1	MR25	METAL FILM
631-639	5322 116 54469	100	1	MR25	METAL FILM
641-644	5322 116 50561	590	1	MR25	METAL FILM
645	5322 116 50561	590	0,5	MR25	METAL FILM
646-649	5322 116 54288	590	0,1	MR24	METAL FILM
651-659	5322 116 54469	100	1	MR25	METAL FILM
660-663	5322 116 50561	590	1	MR25	METAL FILM
664	5322 116 50561	590	0,5	MR25	METAL FILM
665-667	5322 116 54288	590	0,1	MR24	METAL FILM
668	5322 116 50561	590	1	MR25	METAL FILM
669-671	5322 116 54556	1,18K	1	MR25	METAL FILM
672	5322 116 54556	1,18K	0,5	MR25	METAL FILM
673-675	5322 116 54993	1,18K	0,1	MR24	METAL FILM
676-684	5322 116 54469	100	1	MR25	METAL FILM
685	5322 116 50555	1,27K	1	MR25	METAL FILM
686-694	5322 116 54556	1,18K	1	MR25	METAL FILM
695	5322 116 54561	1,33K	1	MR25	METAL FILM
696	5322 116 54497	226	1	MR25	METAL FILM
697	5322 116 50524	3,01K	1	MR25	METAL FILM
698	4822 116 51253	10K	1	MR25	METAL FILM
699,702	5322 116 54558	8,25K	1	MR25	METAL FILM
700	5322 116 50479	15,4K	1	MR25	METAL FILM
701,708	5322 100 10112	1K		LIN	TRIMMING POTM
703	5322 116 50669	205	1	MR25	METAL FILM
704	5322 116 54599	5,76K	1	MR25	METAL FILM
705	5322 116 50728	1,87K	1	MR25	METAL FILM
706	5322 116 54529	619	1	MR25	METAL FILM
707	5322 116 55451	487	1	MR25	METAL FILM
709	5322 116 50729	4,22K	1	MR25	METAL FILM
710-711	5322 116 54558	8,25K	1	MR25	METAL FILM
712	5322 116 54549	1,0K	1	MR25	METAL FILM
713	5322 100 10112	1K		LIN	TRIMMING POTM
714	5322 100 50484	4,64K	1	MR25	METAL FILM
715	5322 116 54571	1,96K	1	MR25	METAL FILM
716	5322 116 54629	14,0K	1	MR25	METAL FILM
717	5322 116 50603	6,19K	1	MR25	METAL FILM
718,722	5322 116 55276	13,3K	1	MR25	METAL FILM
719,721	4822 116 51282	511	1	MR25	METAL FILM
723,724	5322 116 54549	1,0K	1	MR25	METAL FILM
725	5322 116 54469	100	1	MR25	METAL FILM
726	4822 116 51282	511	1	MR25	METAL FILM
727,728	5322 116 54536	750	1	MR25	METAL FILM
729	5322 101 14048	47K		LIN	TRIMMING POTM
730,740	5322 116 50636	2,74K	1	MR25	METAL FILM
731,732	5322 116 54469	100	1	MR25	METAL FILM
733	5322 116 54012	6,81K	1	MR25	METAL FILM
734,735	5322 116 54549	1,0K	1	MR25	METAL FILM

ITEM	ORDERING NUMBER	OHM	TOL (%)	TYPE	REMARKS
736,737	5322 116 55273	196	1	MR25	METAL FILM
738 *			1	MR25	METAL FILM
739	5322 116 55273	196	1	MR25	METAL FILM
741	5322 116 54635	16,9K	1	MR25	METAL FILM
742,743	5322 116 55448	4,02K	1	MR25	METAL FILM
744	5322 116 55598	360	5	PR37	METAL FILM
745	5322 116 55188	240	5	PR37	METAL FILM
746	5322 116 54474	110	1	MR25	METAL FILM
747	5322 116 54572	2,0K	1	MR25	METAL FILM
748	5322 116 50479	15,4K	1	MR25	METAL FILM
749	5322 116 50524	3,01K	1	MR25	METAL FILM
750	5322 101 14011	100		LIN	TRIMMING POTM
751	5322 116 55448	4,02K	1	MR25	METAL FILM
752	5322 116 50458	7,87K	1	MR25	METAL FILM
753	5322 116 50457	215	1	MR25	METAL FILM
754	5322 116 54497	226	1	MR25	METAL FILM
755	5322 116 54457	71,5	1	MR25	METAL FILM
757	5322 116 50747	1,0K	0,1	MR24	METAL FILM
759-761	5322 116 54064	2,0K	0,1	MR24	METAL FILM
762	5322 116 55197	2,1K	0,1	MR24	METAL FILM
763	5322 116 55039	5,9K	0,1	MR24	METAL FILM
764	5322 116 54064	2,0K	0,1	MR24	METAL FILM
765	5322 116 54222	14K	0,1	MR24	METAL FILM
767	5322 116 54554	1,1K	1	MR25	METAL FILM
768	5322 116 54656	30,9K	1	MR25	METAL FILM
770	5322 116 54573	2,1K	1	MR25	METAL FILM
771	5322 116 50872	61,9K	1	MR25	METAL FILM
773	5322 116 54549	1,0K	1	MR25	METAL FILM
774	5322 116 54706	127K	1	MR25	METAL FILM
775	5322 116 50459	422	1	MR25	METAL FILM
776,781	4822 116 51253	10K	1	MR25	METAL FILM
777	5322 116 50675	2,26K	1	MR25	METAL FILM
778	5322 116 50635	1,47K	1	MR25	METAL FILM
779,794	5322 100 10112	1K		LIN	TRIMMING POTM
780	5322 116 54597	5,36K	1	MR25	METAL FILM
782	5322 116 54625	11,8K	1	MR25	METAL FILM
783	5322 116 50458	7,87K	1	MR25	METAL FILM
784,789	4822 116 51253	10K	1	MR25	METAL FILM
785	5322 116 50443	12,7K	1	MR25	METAL FILM
786	5322 116 54608	7,50K	1	MR25	METAL FILM
787	5322 116 54641	19,6K	1	MR25	METAL FILM
788,796	5322 116 50523	4,99K	1	MR25	METAL FILM
791	5322 116 55276	13,3K	1	MR25	METAL FILM
792 *			1	MR25	METAL FILM
793,795	5322 116 55448	4,02K	1	MR25	METAL FILM
797,798	5322 116 50677	21,5	1	MR25	METAL FILM
799,800	5322 116 55598	360	5	PR37	METAL FILM
801,802	5322 116 54451	61,9	1	MR25	METAL FILM
803,804	5322 116 50555	1,27K	1	MR25	METAL FILM
805,806	4822 116 51253	10K	1	MR25	METAL FILM
807	5322 116 54623	11K	1	MR25	METAL FILM
808,809	5322 116 54014	23,7	1	MR25	METAL FILM
810	5322 116 54549	1,0K	1	MR25	METAL FILM
811,812	5322 116 50669	205	1	MR25	METAL FILM
813,814	4822 116 51167	33	5	PR37	METAL FILM
815,816	5322 116 55416	10	5	PR37	METAL FILM
817	5322 116 50635	1,47K	1	MR25	METAL FILM
818,819	4822 116 51098	100	5	PR37	METAL FILM
820,823	5322 116 54499	249	1	MR25	METAL FILM
821	5322 116 50679	237	1	MR25	METAL FILM
822	5322 116 50437	243	1	MR25	METAL FILM
824,827	5322 116 54499	249	1	MR25	METAL FILM
825,828	5322 116 54426	121	1	MR25	METAL FILM
826	5322 116 54478	124	1	MR25	METAL FILM
829,831	5322 116 54478	124	1	MR25	METAL FILM
830	5322 116 54426	121	1	MR25	METAL FILM
832	5322 116 54632	14,7K	1	MR25	METAL FILM
833,836	5322 100 10112	1,0K		LIN	TRIMMING POTM

* value selected in test

ITEM	ORDERING NUMBER	OHM	TOL (%)	TYPE	REMARKS
834	5322 116 50556	4,42K	1	MR25	METAL FILM
835	5322 116 54637	17,8K	1	MR25	METAL FILM
837	5322 116 50515	1,78K	1	MR25	METAL FILM
838,840	5322 116 54589	3,83K	1	MR25	METAL FILM
839	5322 101 14047	470		LIN	TRIMMING POTM
842 *			1	MR25	METAL FILM
843-845	5322 116 54965	82	5	PR52	METAL FILM
846	5322 116 50452	10	1	MR25	METAL FILM
847	5322 116 55335	383K	1	MR25	METAL FILM

* value selected in test

COILS/U1

ITEM	ORDERING NUMBER	TYPE/DESCRIPTION
851,852	5322 158 14284	
853	5322 158 10222	10MUH
854	5322 158 10284	47MUH
855-857	5322 158 10276	4,7MUH

RELAIS/U1

861-880	4822 280 20064	

UNIT 2

TRANSISTORS

301,302	4822 130 44195	BF494

INTEGRATED CIRCUITS

327,331	5322 209 84823	N74LS00N
328,329	5322 209 14433	MOS-HEF40097BP
330	5322 209 85255	N74LS90N
332	5322 209 10215	MOS-P8035 HL
333	5322 209 14559	MOS-HEF4508BP
335-337	5322 209 14887	MOS-P8243
341	5322 209 14045	MOS-HEF4001BP
342	5322 209 14054	MOS-HEF4081BP
345-348	5322 209 85464	MC3441AP
349	5322 209 14509	MOS-HEF4738VP
350	5322 209 14186	MOS-HEF4093BP
351	5322 209 14219	MOS-HEF4014BP
352-359	5322 209 86052	N74LS283N
360-365	5322 209 85562	N74LS174N
369	5322 209 85974	SN74LS109AN
370-376	5322 209 84999	N74LS175N
377-380	5322 209 84997	N74LS86N
381	5322 209 54695	N82S114N PROM loaded<LO 09..., see SGS 38 and Fig. 44
381	5322 209 50333	N82S115N PROM loaded LO 09... onwards
382,383	5322 209 85489	N74LS157N

DIODES/U2

401	4822 130 30613	BAW62
402	4822 130 30917	BY225-100, RECTIFIER

CAPACITORS/U2

ITEM	ORDERING NUMBER	FARAD	TOL (%)/VAL	VOLTS	REMARKS
500	4822 122 31049	6P8	0,25	100	CERAMIC PLATE
501,510	4822 124 20671	68MU		6,3	ELECTROLYTIC
502,503	4822 122 30103	22N	-20+80	63	CERAMIC PLATE
504	4822 122 30045	27P	2	100	CERAMIC PLATE
505	5322 125 54083	2,5-27P		100	TRIMMER
506,508	4822 122 31316	100P	2		CERAMIC PLATE
507,509	4822 122 31247	120P	2	100	CERAMIC PLATE
511-514	4822 122 30103	22N	-20+80	63	CERAMIC PLATE
515	5322 124 10153	22MU		15	ELECTROLYTIC TANT.
516	4822 122 30103	22N	-20+80	100	CERAMIC PLATE
517	4822 124 20671	68MU		6,3	ELECTROLYTIC
518	5322 124 14069	3MU3		15	ELECTROLYTIC TANT.
519	4822 124 20783	6800MU		16	ELECTROLYTIC
520,521	4822 124 20671	68MU		6,3	ELECTROLYTIC
522-527	4822 122 30103	22N	-20+80	63	CERAMIC PLATE
528,529	4822 122 31063	22P *	2	100	CERAMIC PLATE
530,531	4822 124 20671	68MU		6,3	ELECTROLYTIC
532,541	4822 122 30103	22N	-20+80	63	CERAMIC PLATE
534-536	4822 122 30103	22N	-20+80	63	CERAMIC PLATE
540	4822 124 20671	68MU		6,3	ELECTROLYTIC

RESISTORS/U2 * may be altered in test

ITEM	ORDERING NUMBER	OHM	TOL (%)	TYPE	REMARKS
601,602	5322 116 54643	20,5K	1	MR25	METAL FILM
603	5322 116 54624	11,5K	1	MR25	METAL FILM
604,607	5322 116 54192	5,11	1	MR25	METAL FILM
605	5322 116 54668	44,2K	1	MR25	METAL FILM
606	5322 116 54557	1,21K	1	MR25	METAL FILM
608-611	5322 116 54595	5,11K	1	MR25	METAL FILM
614	5322 116 50675	2,26K	1	MR25	METAL FILM
615	5322 116 54683	68,1K	1	MR25	METAL FILM
616	5322 116 90132	8 x 4k7	1		RES.NETW.
620	5322 116 54595	5,11K	1	MR25	METAL FILM
621,622	5322 116 54519	402	1	MR25	METAL FILM
628,629	5322 116 54549	1,0K	1	MR25	METAL FILM
630	5322 116 50557	46,4K	1	MR25	METAL FILM
650	5322 116 54188	1,0M	1	MR30	METAL FILM
851	5322 242 74407	CRYSTAL 8.590042 MHZ			

UNIT 3

TRANSISTORS/U3

350-376 EVEN NOS	4822 130 44197	BC558B
351-375 ODD NOS	4822 130 44283	BC636
380-388	4822 130 44196	BC548C
389-395	4822 130 44121	BC338

INTEGRATED CIRCUITS/U3

301	5322 209 86243	MOS-P8279
302	5322 209 86085	N74LS154N
303	5322 209 85752	N74LS155N
304	5322 209 84994	N74LS05N
306	5322 209 85832	N74LS26A
307	4822 209 80775	NE555N
308	5322 209 85789	SN74LS248N
309,310	5322 209 14068	MOS-HEF4050BP

DISPLAY/U3

451-467	5322 130 34389	HP5082-7730
469	5322 130 34985	HP5082-7732
471-475	5322 130 34389	HP5082-7730

DIODES/U3

476,477	4822 130 30914	LED-CQY54

CAPACITORS/U3

ITEM	ORDERING NUMBER	FARAD	TOL (%)	VOLTS	REMARKS
501,504	4822 124 20671	68MU		6,3	ELECTROLYTIC
502	4822 122 30103	22N	-20+80	63	CERAMIC PLATE
503	5322 124 14069	3MU3		15	ELECTROLYTIC TANT.
506-510	4822 122 30103	22N	-20+80	63	CERAMIC PLATE
520	5322 124 14075	1MU0		35	ELECTROLYTIC TANT.

RESISTORS/U3

ITEM	ORDERING NUMBER	OHM	TOL (%)	TYPE	REMARKS
601-606	5322 116 54506	287	1	MR25	METAL FILM
607,608	5322 116 54728	215K	1	MR25	METAL FILM
609	5322 111 94268	6,8K			RESISTOR-NETW.
610-625	5322 116 50895	18,7	1	MR25	METAL FILM
630	5322 111 94267	2,2K			RESISTOR-NETW.
650-674, EVEN NOS	5322 116 54516	365	1	MR25	METAL FILM
651-675, ODD NOS	5322 116 54595	5,11K	1	MR25	METAL FILM
676	5322 116 55448	4,02K	1	MR25	METAL FILM
677-678	5322 116 50903	24,9	1	MR25	METAL FILM
690	5322 116 54683	68,1K	1	MR25	METAL FILM
691	5322 116 54595	5,11K	1	MR25	METAL FILM

UNIT 4

ITEM	ORDERING NUMBER	TYPE/DESCRIPTION
401-405	4822 130 30914	LED-CQY54

B7 B6 B5 / BITS	0 0 0	0 0 1	0 1 0	0 1 1	1 0 0	1 0 1	1 1 0	1 1 1
B4 B3 B2 B1	CONTROL		NUMBERS SYMBOLS		UPPER CASE		LOWER CASE	
0 0 0 0	0 NUL 0	20 DLE 16	40 SP 32	60 0 48	100 @ 64	120 P 80	140 ` 96	160 p 112
0 0 0 1	1 GTL SOH 1	21 LLO DC1 17	41 ! 33	61 1 49	101 A 65	121 Q 81	141 a 97	161 q 113
0 0 1 0	2 STX 2	22 DC2 18	42 " 34	62 2 50	102 B 66	122 R 82	142 b 98	162 r 114
0 0 1 1	3 ETX 3	23 DC3 19	43 # 35	63 3 51	103 C 67	123 S 83	143 c 99	163 s 115
0 1 0 0	4 SDC EOT 4	24 DCL DC4 20	44 $ 36	64 4 52	104 D 68	124 T 84	144 d 100	164 t 116
0 1 0 1	5 PPC ENQ 5	25 PPU NAK 21	45 % 37	65 5 53	105 E 69	125 U 85	145 e 101	165 u 117
0 1 1 0	6 ACK 6	26 SYN 22	46 & 38	66 6 54	106 F 70	126 V 86	146 f 102	166 v 118
0 1 1 1	7 BEL 7	27 ETB 23	47 ' 39	67 7 55	107 G 71	127 W 87	147 g 103	167 w 119
1 0 0 0	10 GET BS 8	30 SPE CAN 24	50 (40	70 8 56	110 H 72	130 X 88	150 h 104	170 x 120
1 0 0 1	11 TCT HT 9	31 SPD EM 25	51) 41	71 9 57	111 I 73	131 Y 89	151 i 105	171 y 121
1 0 1 0	12 LF A 10	32 SUB 26	52 * 42	72 : 58	112 J 74	132 Z 90	152 j 106	172 z 122
1 0 1 1	13 VT B 11	33 ESC 27	53 + 43	73 ; 59	113 K 75	133 [91	153 k 107	173 { 123
1 1 0 0	14 FF C 12	34 FS 28	54 , 44	74 < 60	114 L 76	134 \ 92	154 l 108	174 ¦ 124
1 1 0 1	15 CR D 13	35 GS 29	55 - 45	75 = 61	115 M 77	135] 93	155 m 109	175 } 125
1 1 1 0	16 SO E 14	36 RS 30	56 . 46	76 > 62	116 N 78	136 ^ 94	156 n 110	176 ~ 126
1 1 1 1	17 SI F 15	37 US 31	57 / 47	77 UNL ? 63	117 O 79	137 UNT — 95	157 o 111	177 RUBOUT (DEL) 7F 127
	ADDRESSED COMMANDS	UNIVERSAL COMMANDS	LISTEN ADDRESSES		TALK ADDRESSES		SECONDARY ADDRESSES OR COMMANDS	

KEY — octal / hex: 25 PPU / NAK / 15 21 — IEC BUS code; ISO 7-bit character; decimal

ISO 7 bit and IEEE/IEC Bus Code Chart

IEEE 488 IEC 625

PM 5190

LF synthesizer

9499 450 08311

841 201

1. PROGRAMMABLE PARAMETERS

- frequency
- ac voltage
- dc voltage
- wave form

2. INTERFACE FUNCTIONS

- AH 1: acceptor handshake complete capability
- L 2: basic listener
- RL 2: remote-local capability, no local lock-out

PHILIPS

3. COMMAND LIST

Header (ASCII)	Body (ASCII)	Function, Comments
F	numerical value	parameter: frequency dimension: kHz range: .000001 ... 2146 kHz example: F 12,5 ≙ frequency 12.5 kHz
A	numerical value	parameter: amplitude dimension: V pp range: .000 ... 19.9 format: .XXX ... XX.X decimal point and each digit X incl. leading/trailing zeroes must be set
D	numerical value	parameter: dc-offset dimension: V dc range: 0.00 ... ± 9.9 format: XX + sign must be left out − sign must be set decimal point position is determined by ac-setting dc-value cannot be set without ac-value restriction: ac + dc < 200, decimal point ignored example: A 1.50 D-05 ≙ amplitude: 1.50 V pp dc-offset : − 0.05 V
W	coding digit	parameter: wave form 1 ≙ sine wave 2 ≙ square wave 3 ≙ triangular wave, frequency 1 mHz ... < 100 kHz 4 ≙ sine wave/AM ext. 5 ≙ triangular wave/AM ext.

Complete command example:

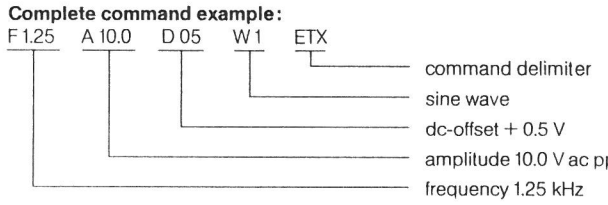

4. COMMAND DELIMITERS

To terminate a single command or a command string, the following character must be used:

ASCII	Hex
ETX	03

5. TIMING

Response time (between ETX transfer and command execution)	7 ms for frequency 10 ms for ac voltage 12 ms for dc voltage 4 ms for wave form

6. SETTING DEVICE ADDRESS

5 switches on the conductor side of the digital printed circuit board, unit 2, are accessible through the slots of the rear bottom cover of the instrument (see fig.). It is not necessary to remove the cabinet.

On delivery the address is set to 4.

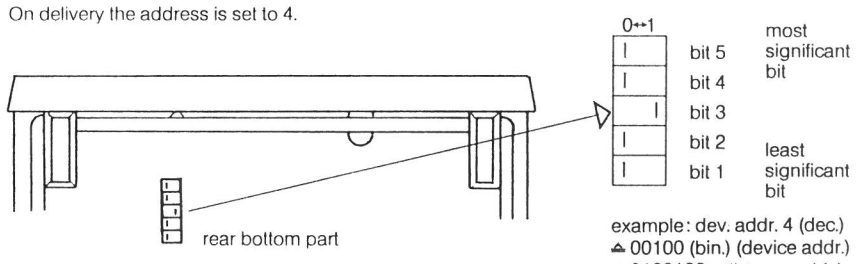

example: dev. addr. 4 (dec.)
≙ 00100 (bin.) (device addr.)
≙ 0100100 (listener addr.)
≙ 36 (dec.) (listener addr.)
≙ $ (ASCII) (listener addr.)

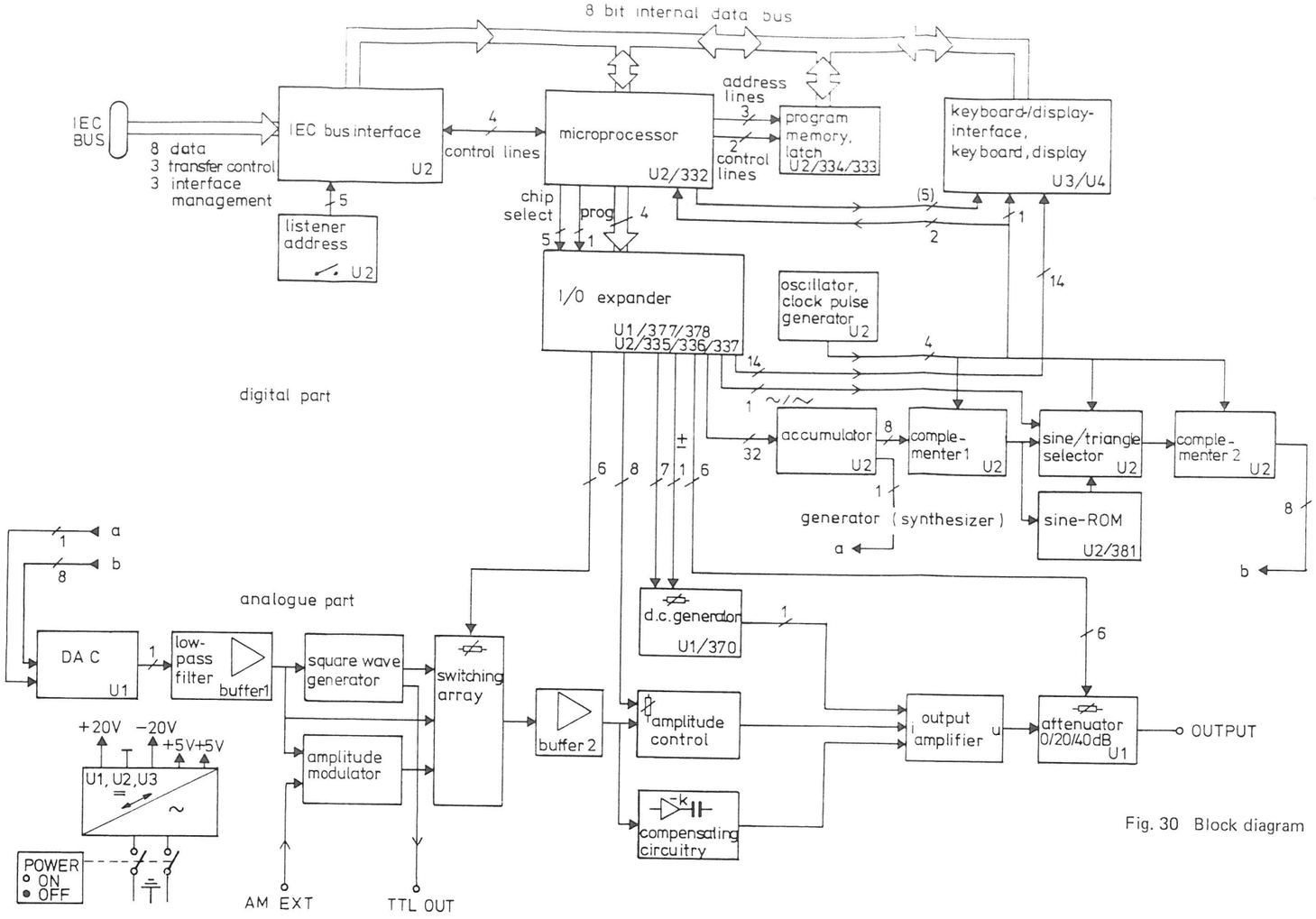

Fig. 30 Block diagram

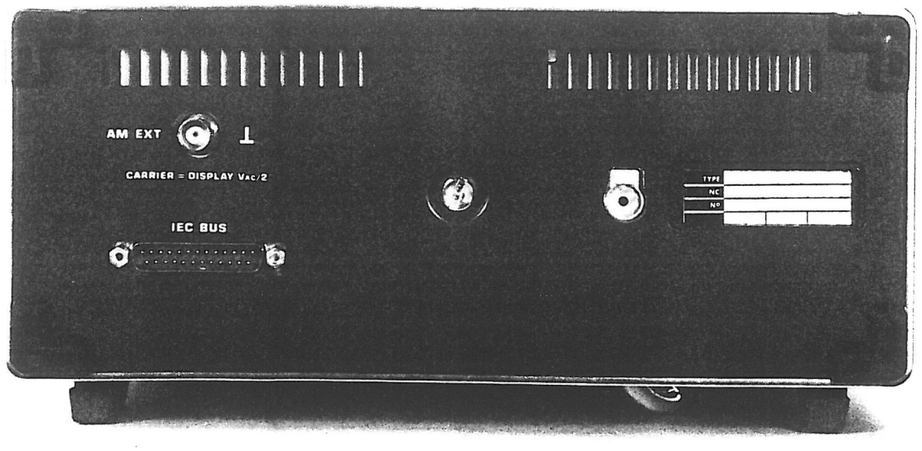

Fig. 32 Rear view

Fig. 31 Front view

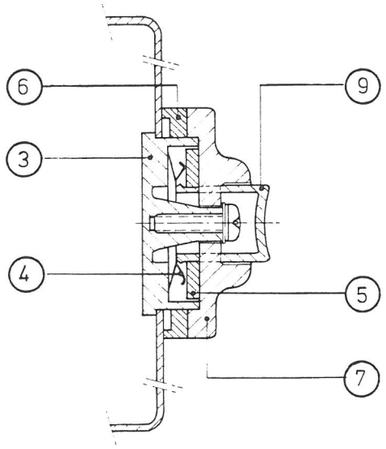

Fig. 33 Handle: spare parts

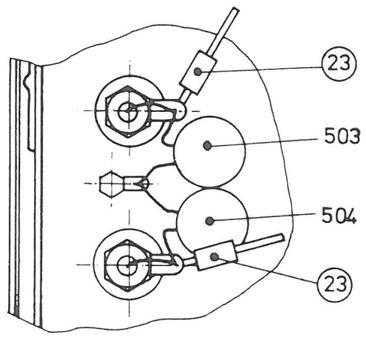

Fig. 34 BNC output sockets: spare parts

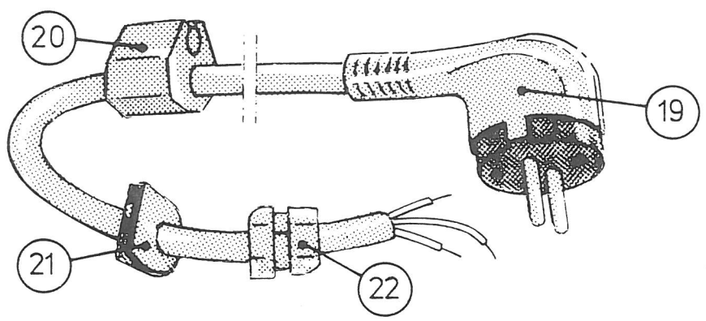

Fig. 35 Mains cable: spare parts

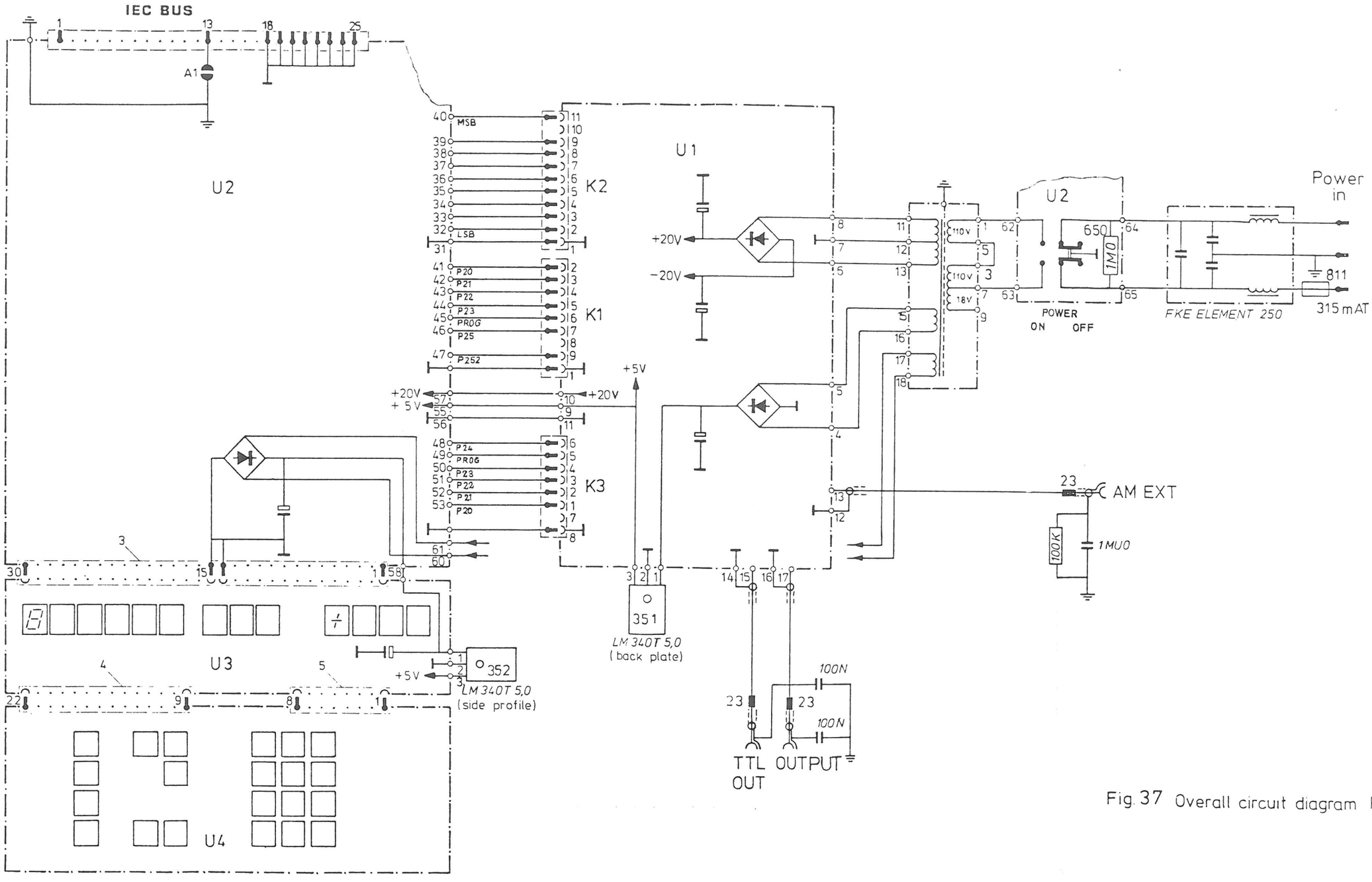

Fig. 37 Overall circuit diagram PM 5190

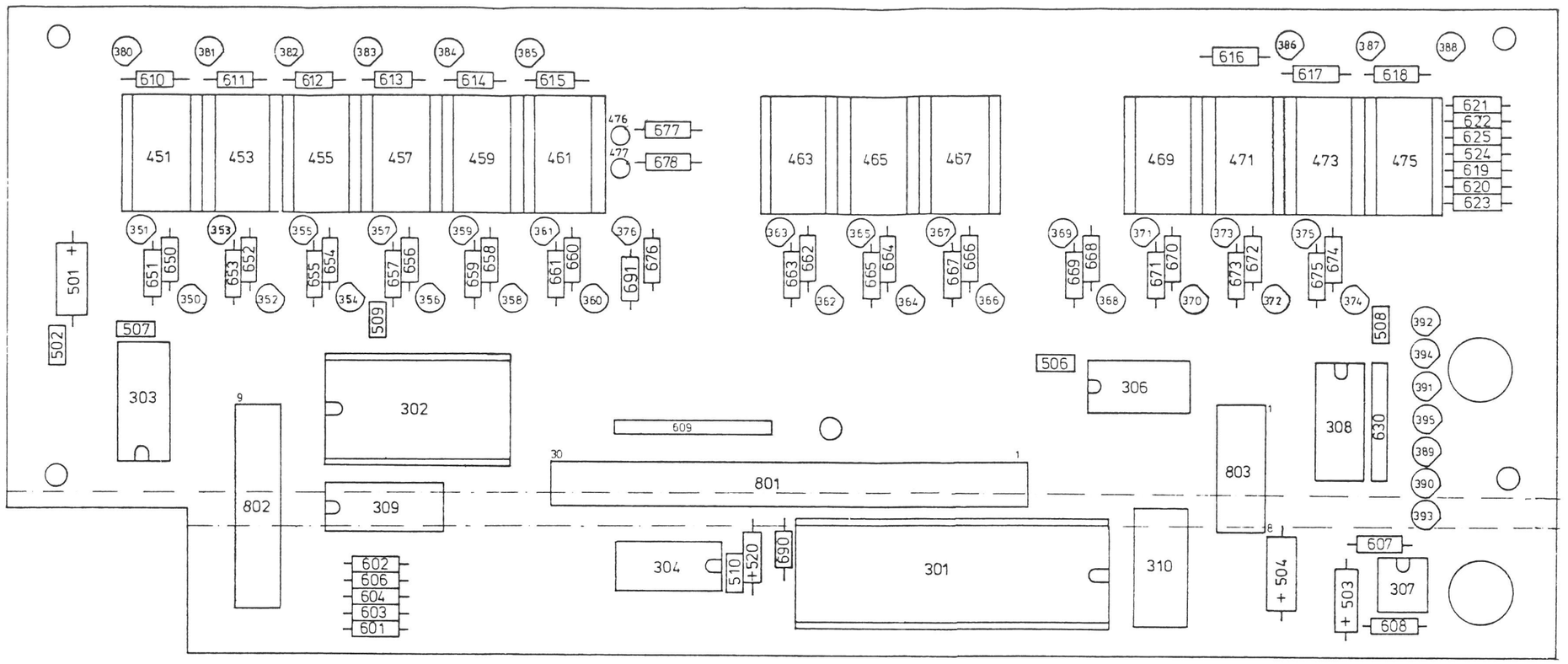

Fig.38 Unit 3, display p.c.b. lay-out

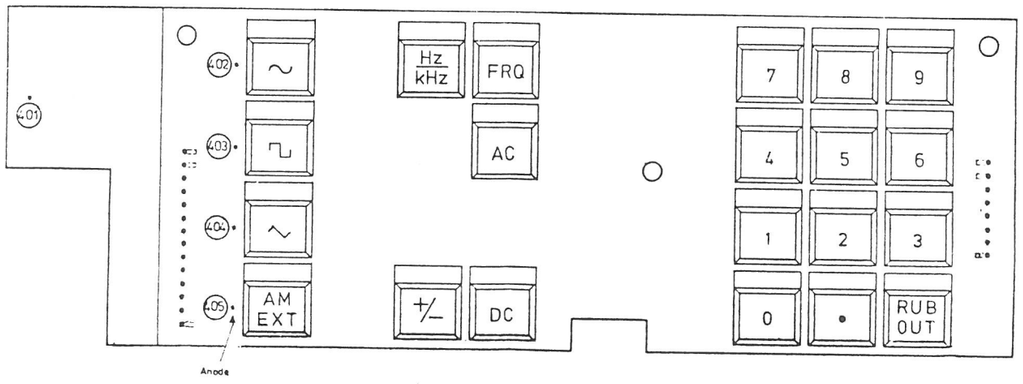

Fig.39 Unit 4, keyboard p.c.b. lay-out

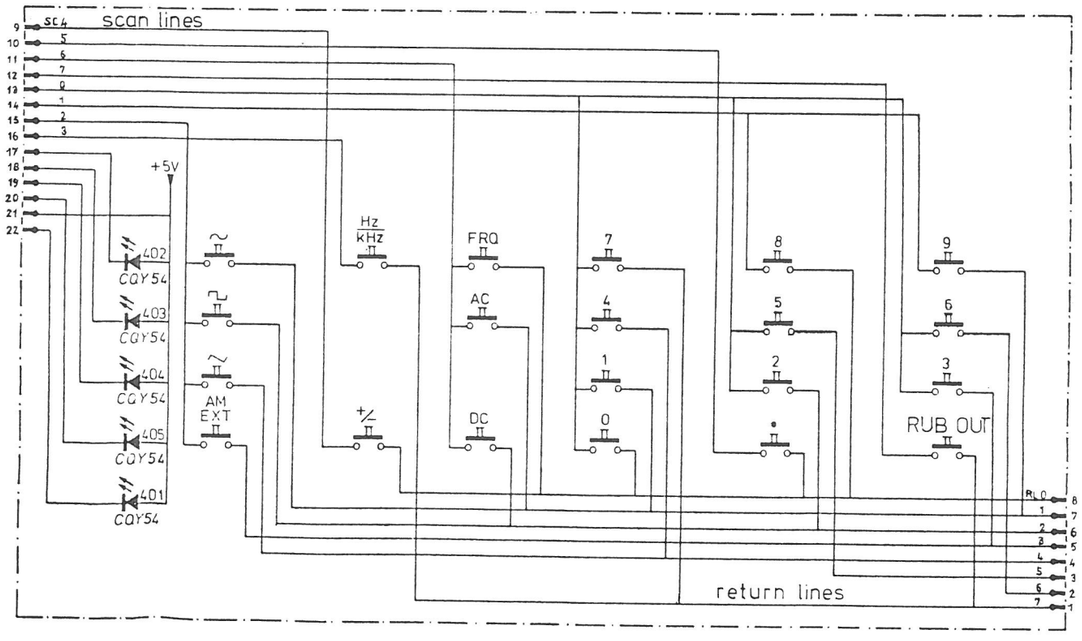

Fig.40 Unit 4, keyboard circuit diagram

keyboard / display interface

display

FREQUENCY AC DC

DECIMAL POINTS

scan lines

blank display

display output

return lines

U4 return lines

U2 decimal points

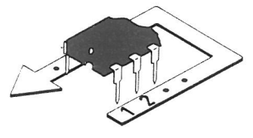

Pos No	Type	Pin No V_{CC} +5V	Pin No GND
301	P 8279	40	20
302	N 74LS154N	24	12
303	N 74LS 155N	16	8
304	N 74LS 05 N	14	7
306	N 74LS 26A	14	7
307	NE 555 N	8	1
308	SN 74LS248N	16	8
309, 310	HEF 4050 BP	1	8

Fig. 41 Unit 3, display

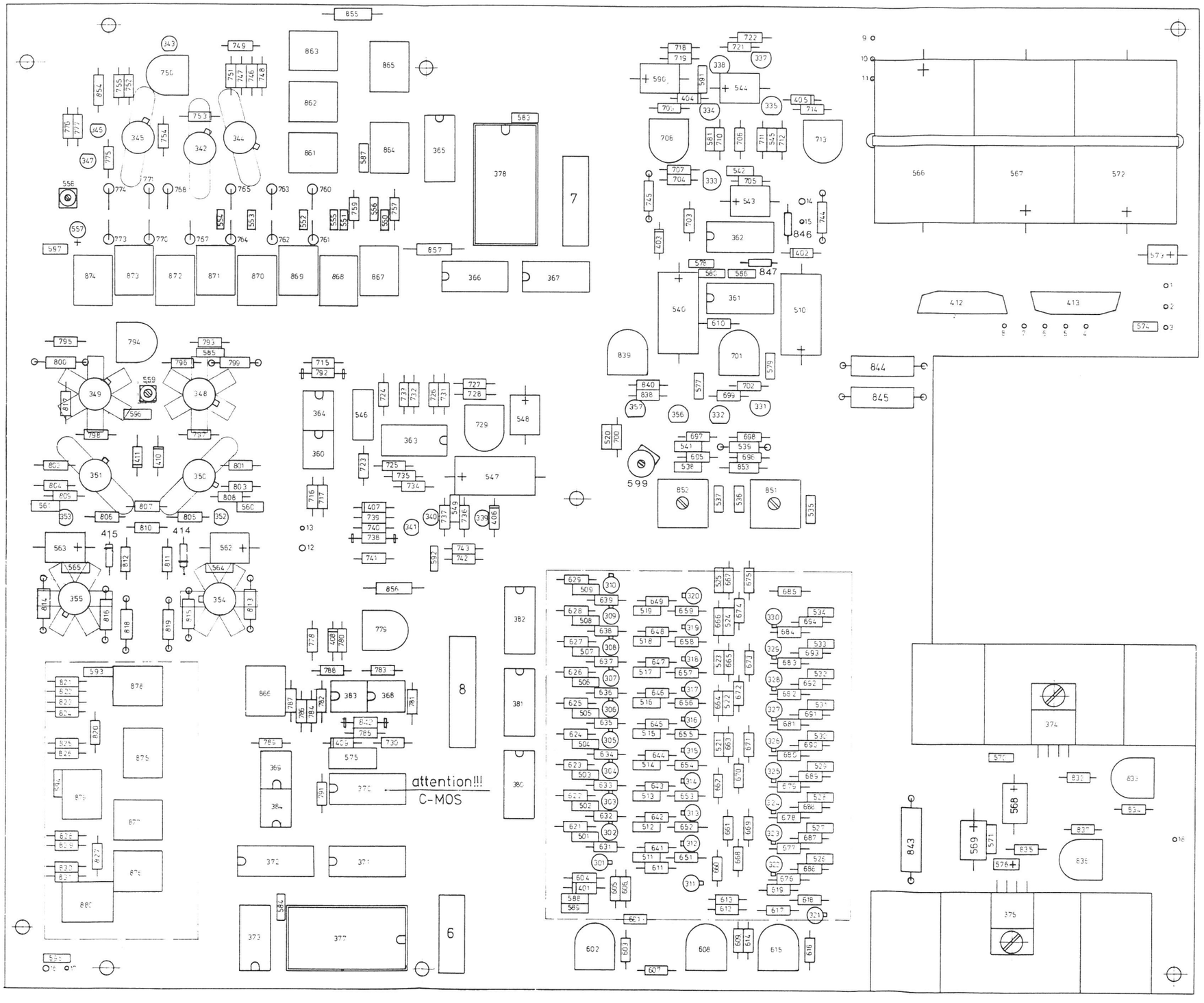

Fig.42 Unit 1

unit 2, complementer 2

digital to analogue converter

square wave generator

low-pass filter

amplitude modulator

power supply

opening solder joints
see chapter 6.4.2.

Deglitch

Ampl.

DC

Sym.

Carrier

DC-Offset

+20 V Adj.

-20V Adj.

+20 V

-20 V

+5V

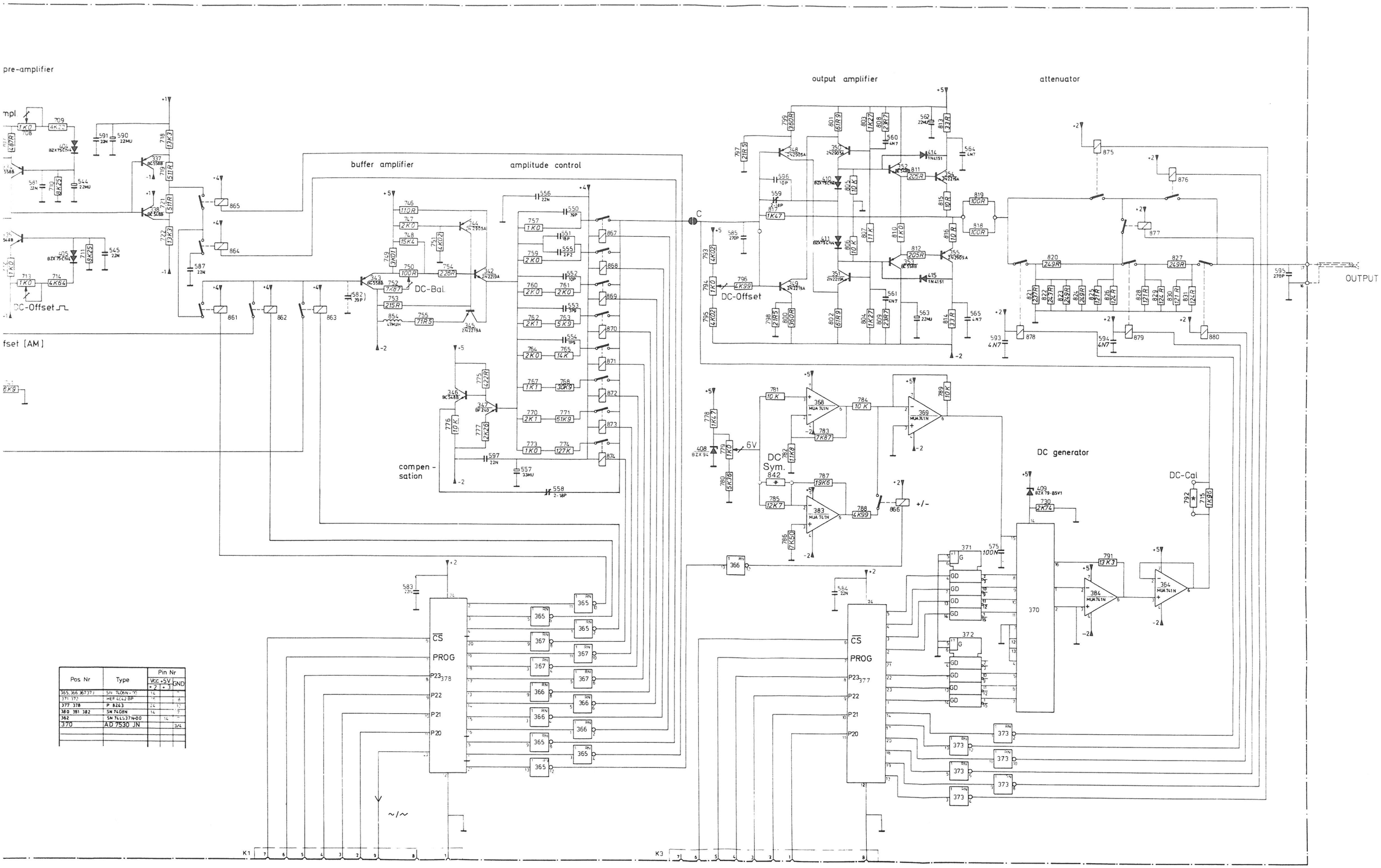

Pos Nr	Type	Pin Nr Vcc +5V +2	Pin Nr Vcc +5V +3	Pin Nr GND
365, 366, 367, 371	SN 7406N-00	14		7
371, 372	HEF 4042 BP	16		8
377, 378	P 8243	24		12
380, 381, 382	SN 7408N	14		7
362	SN 74LS37N-00		14	7
370	AD 7530 JN			3/4

Fig. 43 Unit 1

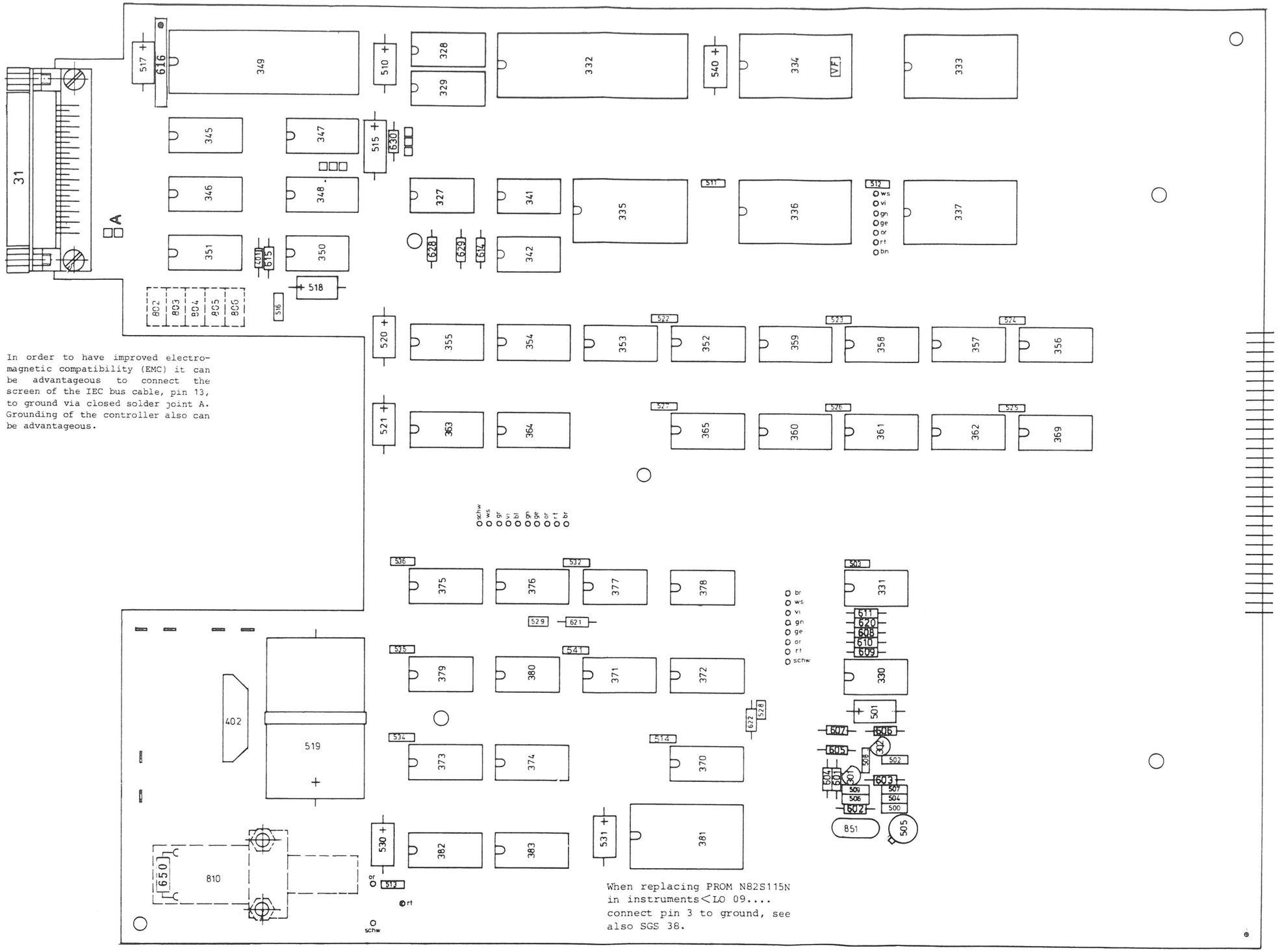

In order to have improved electro-magnetic compatibility (EMC) it can be advantageous to connect the screen of the IEC bus cable, pin 13, to ground via closed solder joint A. Grounding of the controller also can be advantageous.

When replacing PROM N82S115N in instruments<LO 09.... connect pin 3 to ground, see also SGS 38.

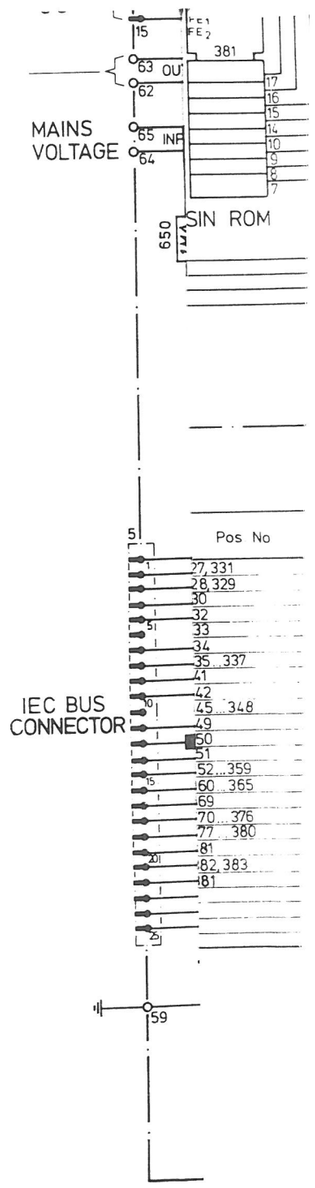

Fig. 44 Unit 2

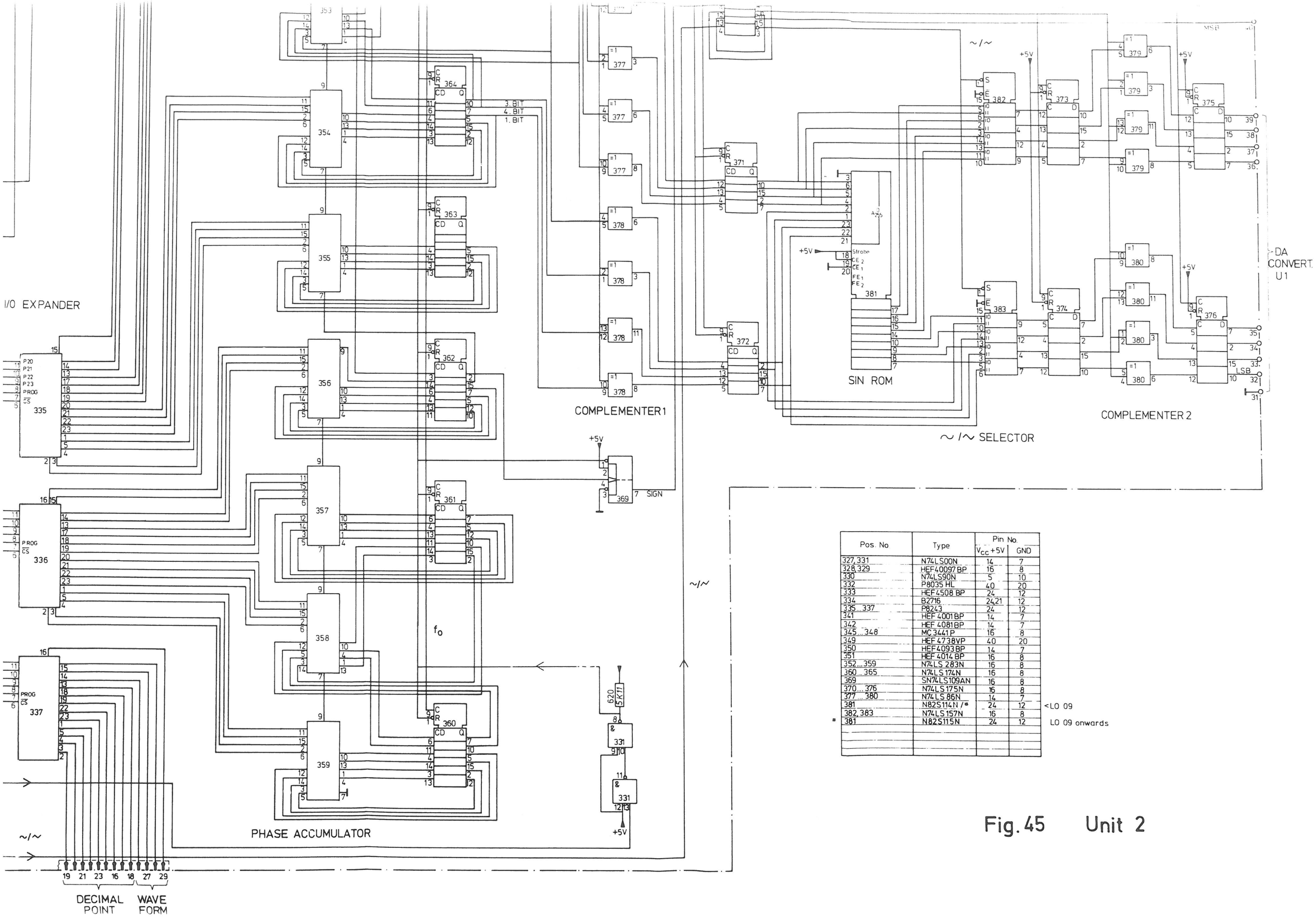

Pos. No	Type	Pin No. V_{CC} +5V	Pin No. GND	
327, 331	N74LS00N	14	7	
328, 329	HEF40097BP	16	8	
330	N74LS90N	5	10	
332	P8035 HL	40	20	
333	HEF4508 BP	24	12	
334	B2716	24,21	12	
335...337	P8243	24	12	
341	HEF 4001BP	14	7	
342	HEF 4081BP	14	7	
345...348	MC3441P	16	8	
349	HEF 4738VP	40	20	
350	HEF4093BP	14	7	
351	HEF 4014 BP	16	8	
352...359	N74LS 283N	16	8	
360...365	N74LS 174N	16	8	
369	SN74LS109AN	16	8	
370...376	N74LS175N	16	8	
377...380	N74LS 86N	14	7	
381	N82S114N /*	24	12	<LO 09
382, 383	N74LS157N	16	8	
* 381	N82S115N	24	12	LO 09 onwards

Fig. 45 Unit 2

* may be altered in test

I/O EXPANDER

SIN ROM

COMPLEMENTER1

COMPLEMENTER 2

~/~ SELECTOR

SIGN

MSB 40

LSB 32

DA CONVERT. U1

QUADR 8. BIT 7. BIT 6. BIT 5. BIT 2. BIT

3. BIT 4. BIT 1. BIT

Pos. No	Type	Pin No V_{CC} +5V	Pin No GND
327,331	N74LS00N	14	7
328,329	HEF40097BP	16	8
330	N74LS90N	5	10
332	P8035 HL	40	20
333	HEF4508 BP	24	12
334	B2716	24,21	12
335..337	P8243	24	12
341	HEF 4001 BP	14	7
342	HEF 4081 BP	14	7
345..348	MC 3441 P	16	8
349	HEF 4738 VP	40	20
350	HEF 4093 BP	14	7
351	HEF 4014 BP	16	8
352..359	N74LS 283N	16	8

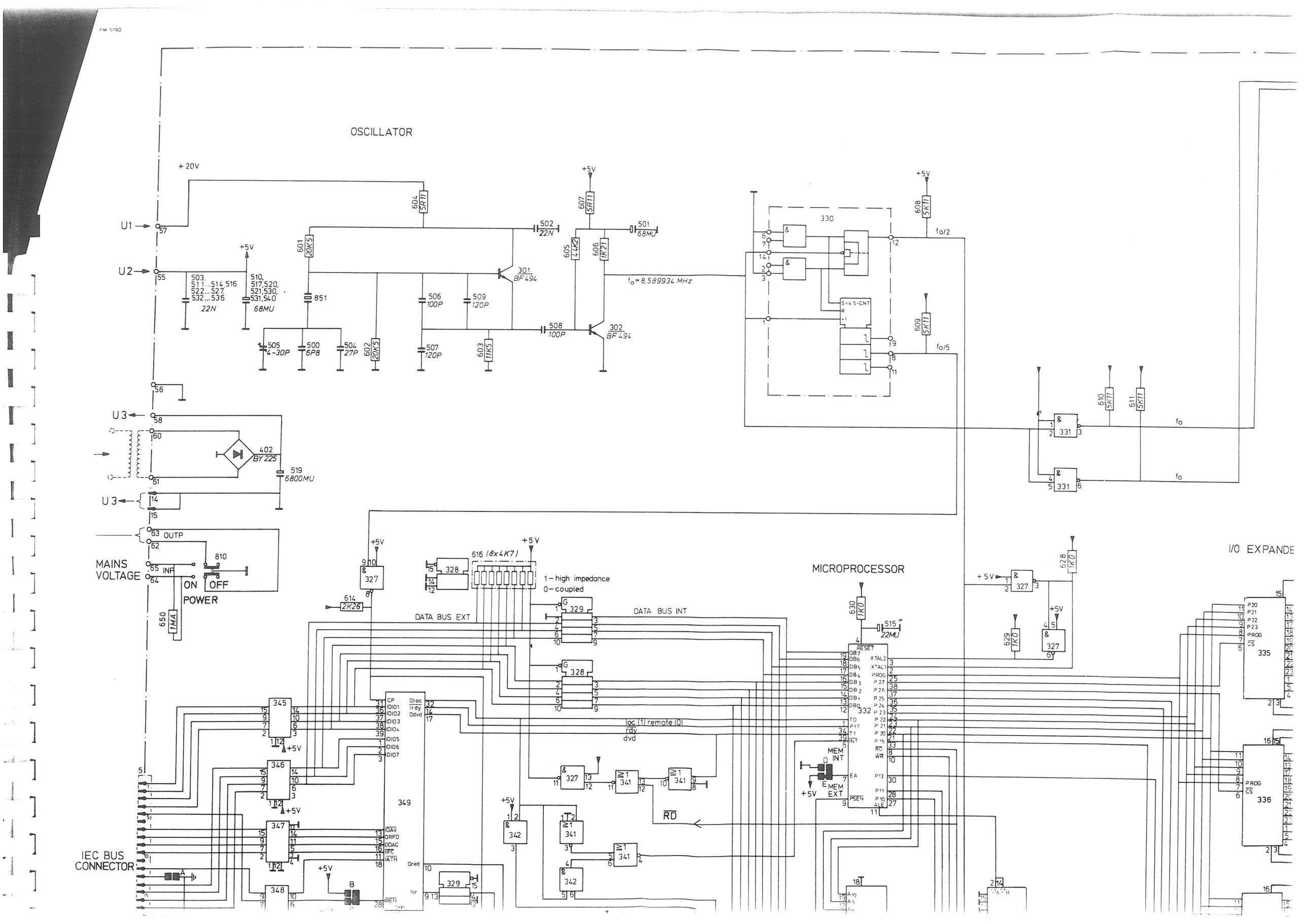

OSCILLATOR
+20V
U1
U2
U3
MAINS VOLTAGE
OUTP
INP
ON
OFF
POWER
IEC BUS CONNECTOR
MICROPROCESSOR
I/O EXPANDE
DATA BUS EXT
DATA BUS INT
1 – high impedance
0 – coupled
616 (8x4K7)
f_o = 8,589934 MHz
$f_o/2$
$f_o/5$
f_o
RD
MEM INT
MEM EXT
loc (1) remote (0)
rdy
dvd

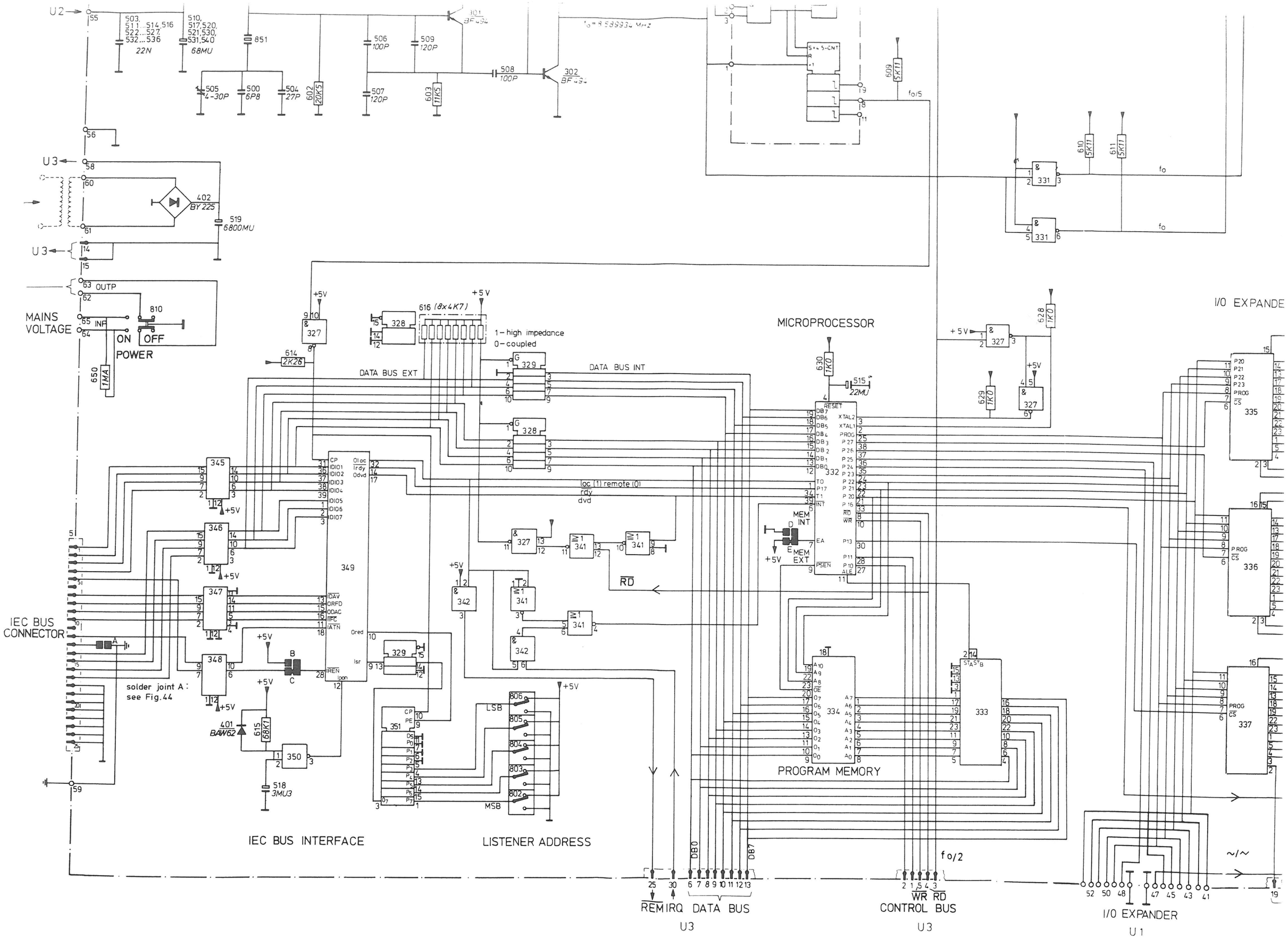

U2
U3
MAINS VOLTAGE
OUTP
INP
ON
OFF
POWER
IEC BUS CONNECTOR
solder joint A: see Fig.44
IEC BUS INTERFACE
LISTENER ADDRESS
DATA BUS EXT
DATA BUS INT
1 - high impedance
0 - coupled
MICROPROCESSOR
PROGRAM MEMORY
MEM INT
MEM EXT
I/O EXPANDE
I/O EXPANDER
REM IRQ DATA BUS
U3
WR RD
CONTROL BUS
U3
U1