2004

MITSUBISHI ELECTRIC

Service Manual

PROJECTION TELEVISION
V24 CHASSIS

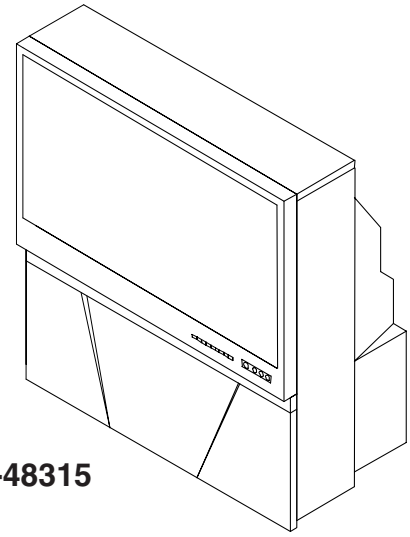

WS-48315

V24 Chassis
MODELS

WS-48315
WS-55315
WS-65315

CAUTION:
Before servicing this chassis, it is important that the service person read the "SAFETY PRECAUTIONS" and "PRODUCT SAFETY NOTICE" contained in this manual.

SPECIFICATIONS

- **Power** : AC 120V, 60Hz
  240W
- **Frequency Range** : VHF 54 ~ 470MHz
  UHF 470 ~ 806MHz
- **Antenna Input** : VHF/UHF 75Ω unbalanced
- **CRT Size** : 7 inches
- **High Voltage** : 30.8KV
- **Speakers** : [WS-48315]
  Two 5" round, full range (8Ω 10W)
  : [WS-55315 / 65315]
  Two 6" round, full range (8Ω 10W)
- **Weight / Cabinet Dimensions**

Model	Weight	Height	Width	Depth
WS-48315	172lbs	49"	44.5"	24"
WS-55315	221 lbs	50.4"	50.5"	27.8"
WS-65315	327 lbs	62"	59"	28"

- **Input Level** : VIDEO IN JACK (RCA Type)
  1.0Vp-p 75Ω unbalanced
  : AUDIO IN JACK (RCA Type)
  -4.7dBm 43kΩ unbalanced
  : S-VIDEO IN JACK (Y/C separate)
  Y=1.0 Vp-p C=0.286Vp-p(BURST)
  75Ω unbalanced
  : COMP / Y, Cr, Cb (RCA Type)
  Y=1.0 Vp-p. Cr, Cb=700mVp-p
  : DTV / Y(G), Pr(R), Pb(B), H, V
  Y 1.0Vp-p with sync 75Ω (RCA Type)
  Pr, Pb: 700mV 75Ω
  H, V: 3.0Vp-p 75Ω
- **Digital Inputs**
  :MonitorLink™/DVI
  :MonitorLink™ Control/RS-232C
- **Output Level** : VIDEO OUT JACK (RCA Type)
  1.0Vp-p 75Ω unbalanced
  : AUDIO OUT JACK (RCA Type)
  -4.7dBm 4.7kΩ unbalanced

- Weight and dimensions shown are approximate.
- Design specifications are subject to change without notice.

MITSUBISHI DIGITAL ELECTRONICS AMERICA, INC.
9351 Jeronimo Road, Irvine, CA 92618-1904
Copyright © 2004 Mitsubishi Digital Electronics America, Inc.
All Rights Reserved

CONTENTS

INTRODUCTION **5**

PRODUCT SAFETY NOTICE **5**

SAFETY PRECAUTIONS **6**

DISASSEMBLY PROCEDURES **7**
WS-48315
Front Cabinet Components 7
Rear Cabinet Components 8
WS-55315 / WS-65315
Front Cabinet Components 9
Rear Cabinet Components 10

SERVICING THE LENTICULAR SCREEN AND FRESNEL LENS **11**
WS-48315
Removal of the Lenticular Screen and Fresnel Lens 11
WS-55315 / WS-65315
Removal of the Lenticular Screen and Fresnel Lens 12
Installation of the Lenticular Screen and Fresnel Lens 13

CABINET SEPARATION PROCEDURES **14**
WS-65315 14

SERVICING THE DIAMONDSHIELD™ **15**
DiamondShield Removal 15
DiamondShield Installation 15

SERVICING PCBs **16**
Chassis Removal 16
PCB Locations 16
Major Parts Locations 16

ANODE LEAD REMOVAL **17**

CRT REPLACEMENT **17**
CRT Removal 17
CRT Installation 18

ELECTRICAL ADJUSTMENTS **20**
Equipment 20
Initial Setup 21
LED Indicator Diagnostics 22
Circuit Adjustment Mode 23
Convergence Adjustment Mode 24
Adjustment Items List 26

Adjustment Procedures 29
Test Point Locations 29
HV Regulation 30
Main / Sub Y Level 30
Main / Sub Color Level 31
CRT Cutoff 31
White Balance (NTSC) 32
White Balance (HD) 32
Black Level 33
Sub Contrast 33
Dynamic Focus Presets 34
Lens Focus 34
Alignment Magnet & Electrostatic Focus 35
Charactrer Position 35
Geometry Presets 36
Deflection Geometry Adjustments 37
Convergence Geometry Adjustments 38
Centering & Static Convergence 39
Coarse Convergence Adjustments 40
Fine Convergence Adjustments 41
MonitorLink Picture Position 41

CHIP PARTS REPLACEMENT 42

REPLACEMENT PARTS 43
Parts Ordering 43
Critical and Warranty Parts Designation 43
Parts Tolerance Codes 43
Quick Reference List 44

SERVICE PARTS LIST 45

SCREEN ASSEMBLY PARTS LIST 57

CIRCUITRY BLOCK DIAGRAMS 59

Part 2
Schematic Diagrams

CONTENTS **Page**

SCHEMATIC DIAGRAMS
PCB INTERCONNECT BLOCK DIAGRAM 1
PCB-MAIN 2
PCB-POWER 3
PCB-TERMINAL-1 (A/V I/O) 4
PCB-TERMINAL-2 (DVI), DOUBLER-3 5
PCB-CRT, CONTROL, FRONT and PREAMP 6
PCB-SIGNAL-1 (TUNER I/O) 7
PCB-SIGNAL-2 (MICRO) 8
PCB-SIGNAL-3 (VIDEO / CHROMA) 9
PCB-SIGNAL-4 (CONVERGENCE GENERATOR) 10
PCB-DOUBLER-1 11
PCB-DOUBLER-2 12

PCB LAYOUT DIAGRAMS 13

INTRODUCTION

This service manual provides service instructions for the PTV Models listed below. Service personnel should read this manual thoroughly before servicing these chassis.

V24 Chassis

WS-48315

WS-55315

WS-65315

This service manual includes:

1. Assembly and disassembly instructions for the front and rear cabinet components.
2. Servicing of the Lenticular Screen and Fresnel Lens.
3. Servicing printed circuit boards (PCBs).
4. CRT replacement procedure.
5. Electrical adjustments.
6. Chip parts replacement procedures.
7. Circuit path diagrams.

The parts list section of this service manual includes:

1. Cabinet and screen parts.
2. Electrical parts.

Schematic and block diagrams of the above listed models are included in this service manual for better understanding of the circuitry. PCB drawings are also included for easy location of parts and test points.

PRODUCT SAFETY NOTICE

Many electrical and mechanical parts in television receivers have special safety related characteristics. These characteristics are often not evident from visual inspection nor can the protection afforded by them necessarily be obtained by using replacement components rated for higher voltage, wattage, etc.

Replacement parts which have special safety characteristics are identified in this service manual.

Electrical components having such features are identified by shading on the schematic diagram and by **bold type** in the parts list of this service manual. **The replacement for any safety part should be identical in value and characteristics.**

SAFETY PRECAUTIONS

NOTICE: Observe all cautions and safety related notes located inside the receiver cabinet and on the receiver chassis.

WARNING:

1. Operation of this receiver outside the cabinet or with the cover removed presents a shock hazard from the receiver's power supplies. Work on the receiver should not be attempted by anyone who is not thoroughly familiar with the precautions necessary when working on high voltage equipment.
2. Do not install, remove or handle the picture tubes in any manner unless shatterproof goggles are worn. People not so equipped should be kept away while the picture tube is being handled. Keep the picture tube away from the body while handling.
3. When service is required, observe the original lead dress. Extra precaution should be taken to assure correct lead dress in the high voltage area. Where a short-circuit has occurred, replace those components that indicate evidence of overheating.

X-Radiation warning

The surface of the cathode ray tubes (CRTs) may generate X-Radiation, so take proper precautions when servicing. It is recommended that a lead apron be used for shielding while handling the CRT. Use this method if possible.

When replacing the CRTs, use only the designated replacement part since it is a critical component with regard to X-Radiation. High voltage must be set as prescribed under the section titled Electrical Adjustments.

Leakage current check

Before returning the receiver to the customer, it is recommended that leakage current be measured according to the following methods.

1. *Cold Check*

   With the alternating current (AC) plug removed from the AC source, place a jumper across the two AC plug prongs. Connect one lead of an ohm meter to the AC plug and touch the other lead to each exposed metal part (i.e. antennas, handle bracket, metal cabinet, screw heads, metal overlay, control shafts, etc.), particularly any exposed metal part that has a return path to the chassis. The resistance of the exposed metal parts having a return path to the chassis **should be a minimum of 1Mega Ohm**. Any resistance below this value indicates an abnormal condition and requires corrective action.

2. *Hot Check ...Use the circuit shown below to perform the hot check test.*
   1. Keep switch S1 open and connect the receiver to the measuring circuit. Immediately after connection, and with the switching devices of the receiver in their operating positions, measure the leakage current for both positions of switch S2.
   2. Close switch S1, energizing the receiver. Immediately after closing switch S1, and with the switching devices of the receiver in their operating positions, measure the leakage current for both positions of switch S2. Repeat the current measurements of items 1 and 2 after the receiver has reached thermal stabilization. **The leakage current must not exceed 0.5 milliampere (mA).**

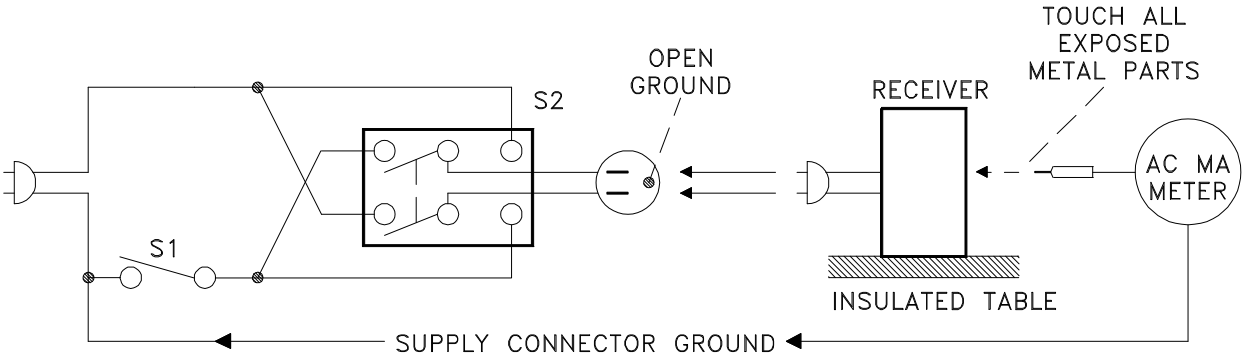

CABINET DISASSEMBLY (FRONT VIEW)

WS-48315

***Refer to PARTS LIST for Part Numbers**

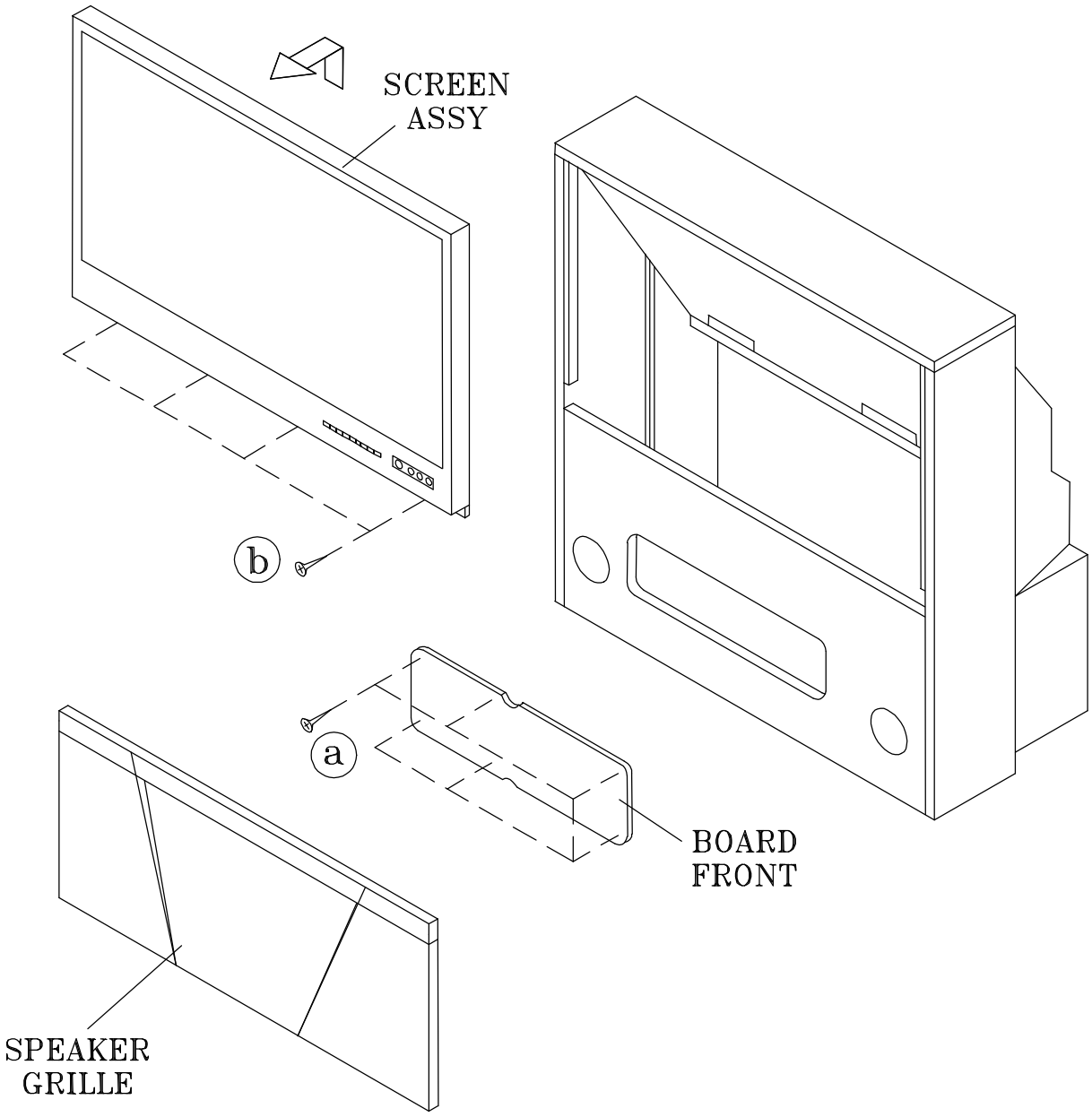

Front Cabinet Disassembly

1. Remove the Speaker Grille by pulling forward.
2. Remove the Board-Front by removing six screws "a".
3. Remove the Screen Assembly by removing four screws "b". Disconnect all cable harnesses between the Screen Assembly and the PCB-Signal.
4. Lift the Screen Assembly and pull up and away from the cabinet as shown.

CABINET DISASSEMBLY (REAR VIEW)

WS-48315

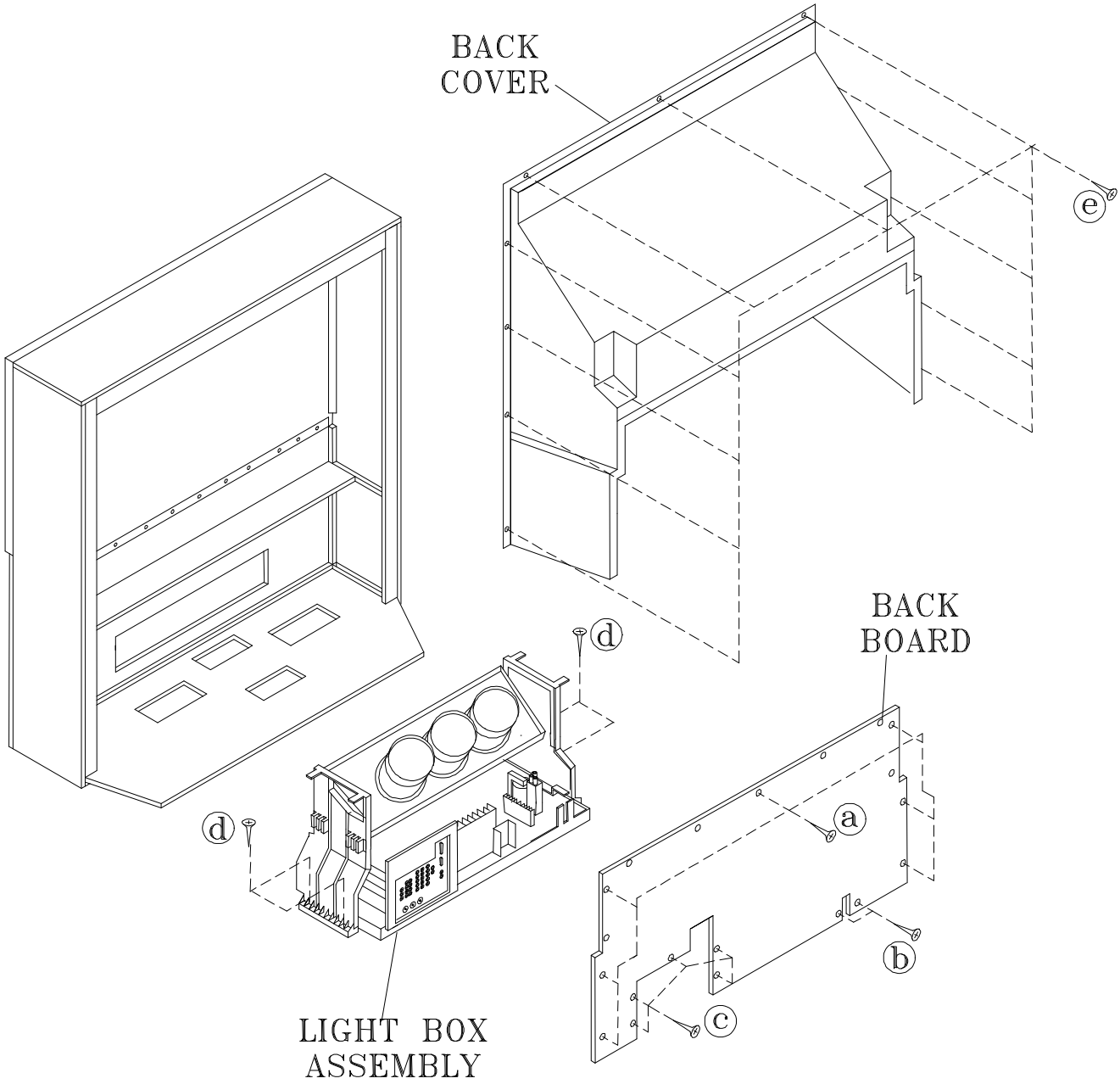

Rear Cabinet Disassembly

1. Remove the Back Board by removing 14 screws "a", “b” and “c”.
2. Remove 4 screws "d" securing the Light Box Assembly.
3. Be certain that all cables and connectors between the Light Box Assembly and external items are disconnected (e.g. speaker plugs).
4. Slide the Light Box Assembly out of the cabinet.

CABINET DISASSEMBLY (FRONT VIEW)

WS-55315	WS-65315

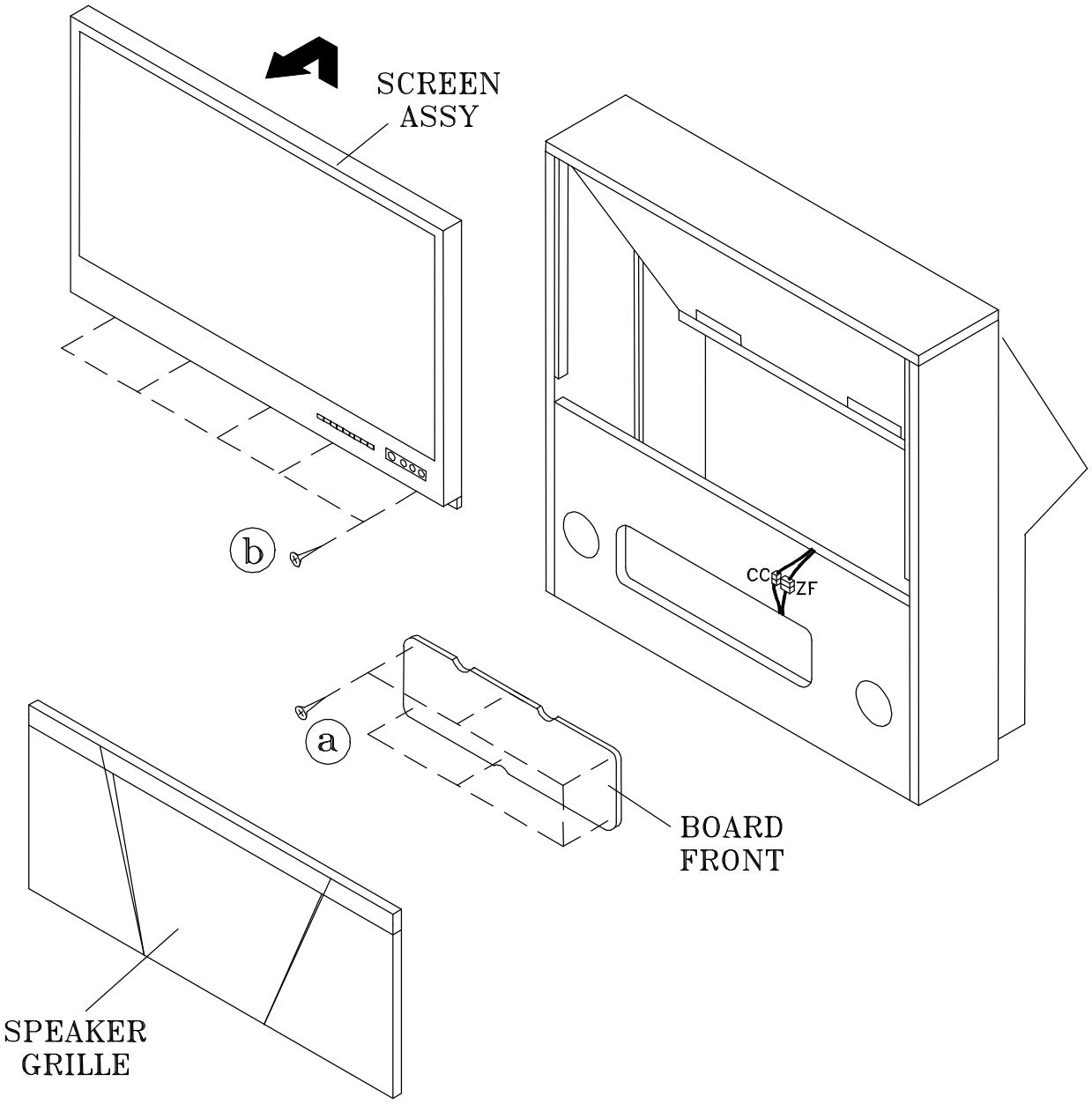

Front Cabinet Disassembly

1. Remove the Speaker Grille by pulling forward.
2. Remove the Front-Board by removing screws "a".
3. Remove the Screen Assembly by removing 5 screws "b". Disconnect connectors CC and ZF between the Screen Assembly and the PCB-Signal.
4. Lift the Screen Assembly and pull up and away from the cabinet as shown.

CABINET DISASSEMBLY (REAR VIEW)

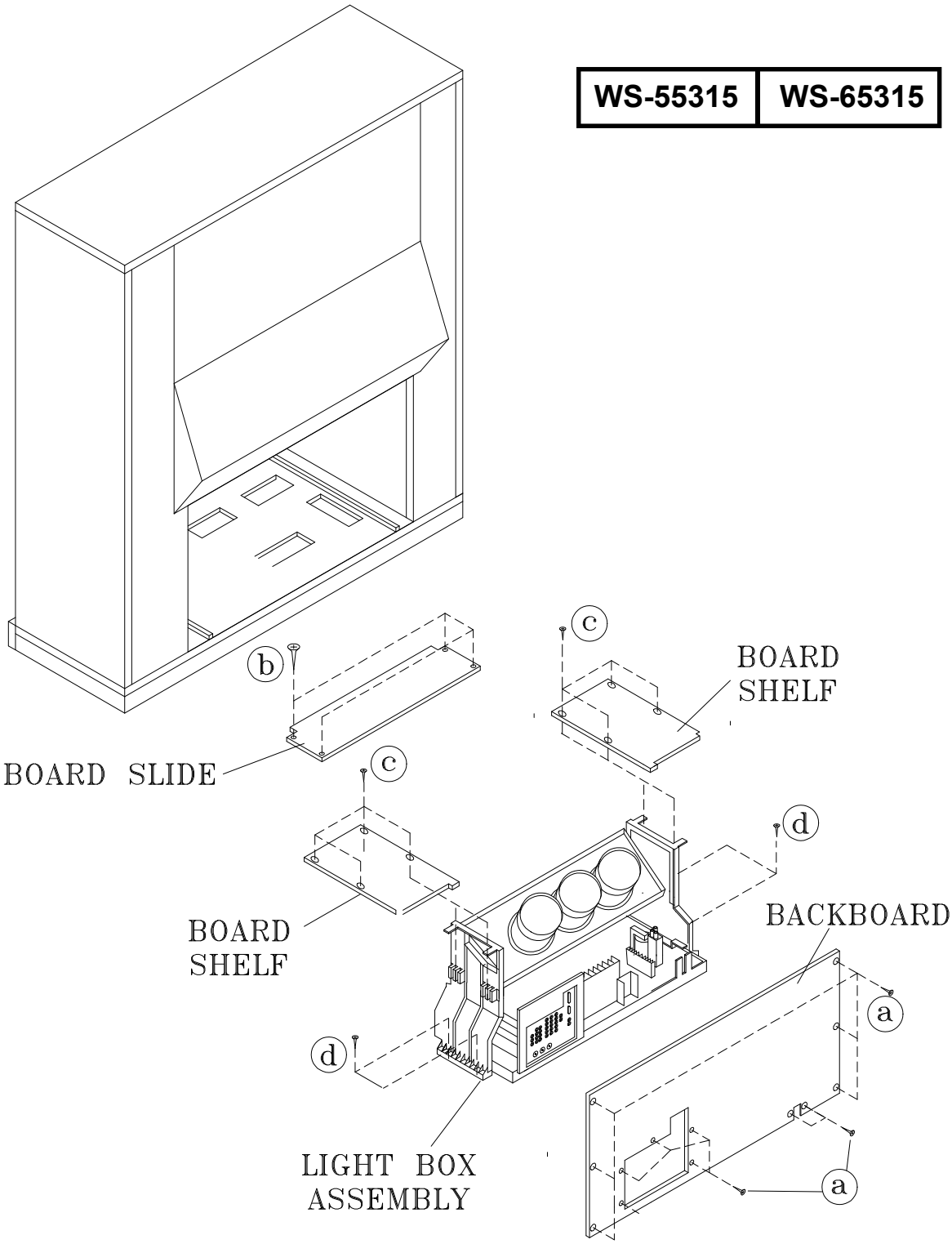

Rear Cabinet Disassembly

1. Remove the Back Board by removing 13 screws "a" (15 screws “a” in 65 inch models).
2. Remove the Board Slide by removing four screws “b”.
3. Remove the two Board Shelves by removing 8 screws “c”.
4. Remove 4 screws "d" securing the Light Box Assembly.
5. Be certain that all cables and connectors between the Light Box Assembly and external items are disconnected (connectors CC, ZF and EJ)).
6. Slide the Light Box Assembly out of the cabinet.

SERVICING THE LENTICULAR SCREEN AND FRESNEL LENS

WS-48315

CAUTION: **Wear gloves** when handling the Lenticular Screen and Fresnel Lens. This prevents cuts and finger prints. **Do not place Fresnel Lens in the sun**. This may cause fire and heat related injuries.

1a. Lenticular Screen and Fresnel Lens Removal

1. Remove the screen assembly as shown in the Cabinet Disassembly procedure.
2. Remove the Top, Bottom and Side Holder Screens..
3. Carefully lift the Lenticular Screen and Fresnel Lens combination from the Screen Frame Assembly.

Note: When separating the Lenticular Screen from the Fresnel Lens, use caution while prying the Screen and Lens apart. Use a slot type screw driver, and remove the pressure sensitive double sided tape.

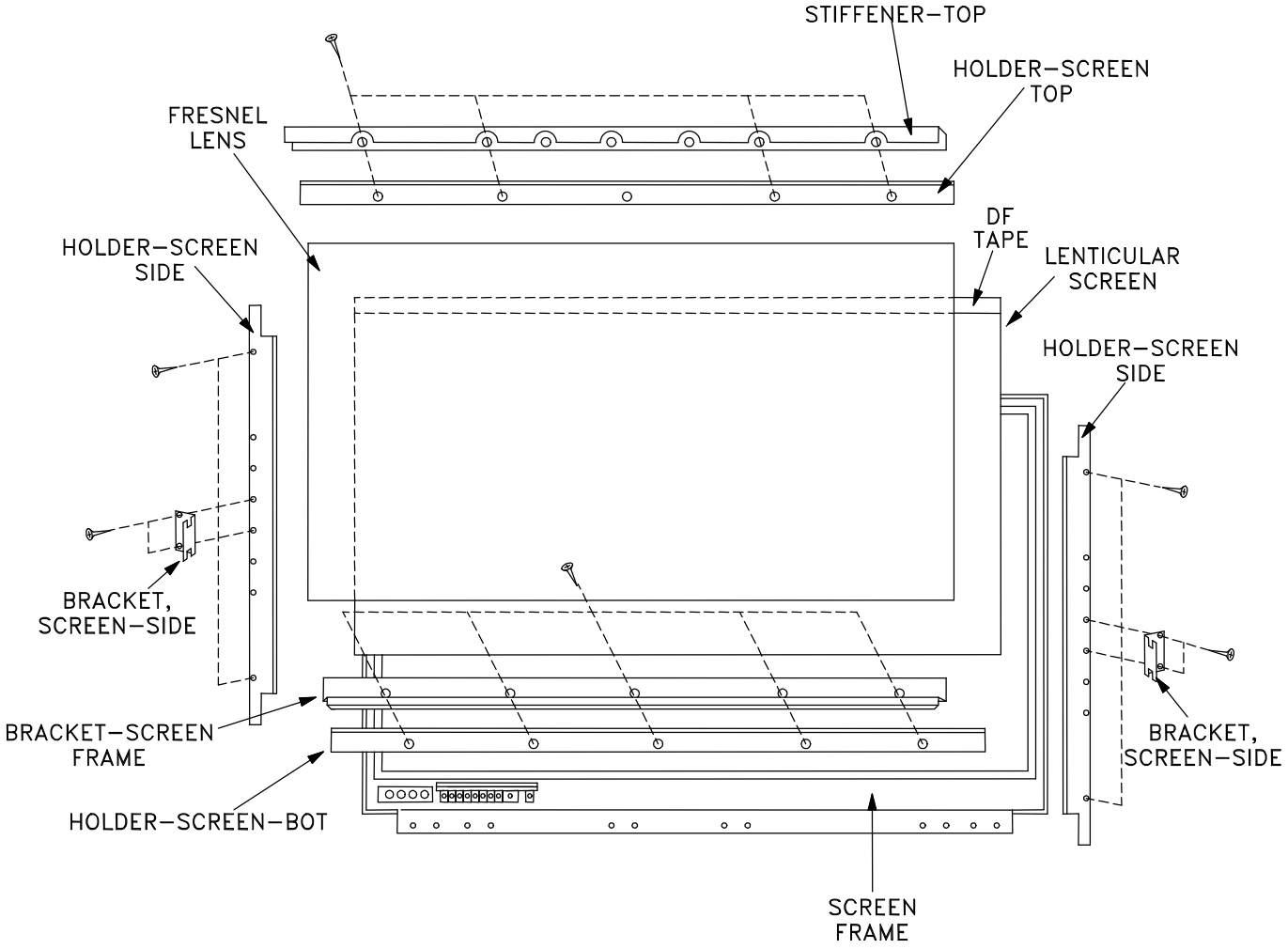

SERVICING THE LENTICULAR SCREEN AND FRESNEL LENS

WS-55315	WS-65315

CAUTION: **Wear gloves** when handling the Lenticular Screen and Fresnel Lens. This prevents cuts and finger prints. **Do not place Fresnel Lens in the sun**. This may cause fire and heat related injuries.

1b. Lenticular Screen and Fresnel Lens Removal

1. Remove the screen assembly as shown in the Cabinet Disassembly procedure.
2. Remove the HOLDER-SCREEN-BOTTOM.
3. Carefully slide the Lenticular Screen and Fresnel Lens combination from the upper Screen Frame Assembly.

Note: When separating the Lenticular Screen from the Fresnel Lens, use caution while prying the Screen and Lens apart. Use a slot type screw driver, and remove the pressure sensitive double sided tape.

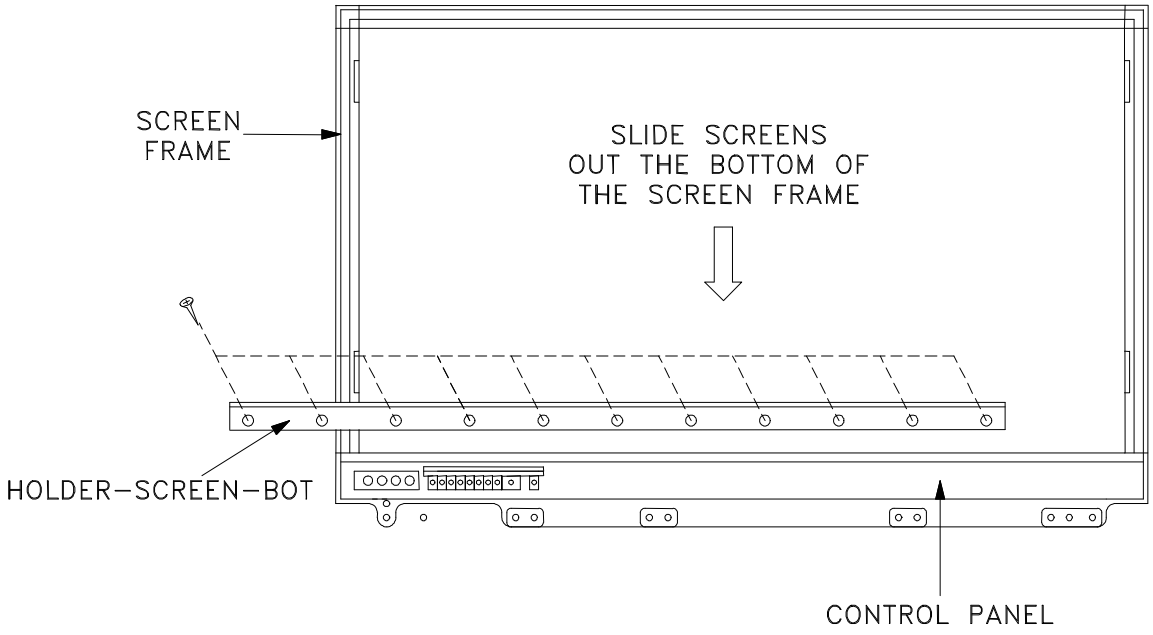

1b. Installing the Fresnel Lens and Lenticular Screen

1. Insert the Lenticular Screen and Fresnel Lens combination into the upper Screen Frame.
2. Install the HOLDER-SCREEN-BOTTOM, install the end screws first.

2. Installation of the Lenticular Screen and Fresnel Lens

Note: Store the Lenticular Screen and Fresnel Lens in a cool dry place. High heat/humidity may deform the Lenticular Screen and Fresnel Lens.

1. Apply double coated tape (Part # LENS-TAPE) along the top front edge of the Fresnel Lens as shown in *Figure 2-2*. Refer to *Table A* for proper tape length.
2. Place the Fresnel Lens on top of the Lenticular Screen and apply pressure at the top edge to bond them together as shown in *Figure 2-2*.
3. Reverse the disassembly procedure for that model to install the screens in the screen frame.

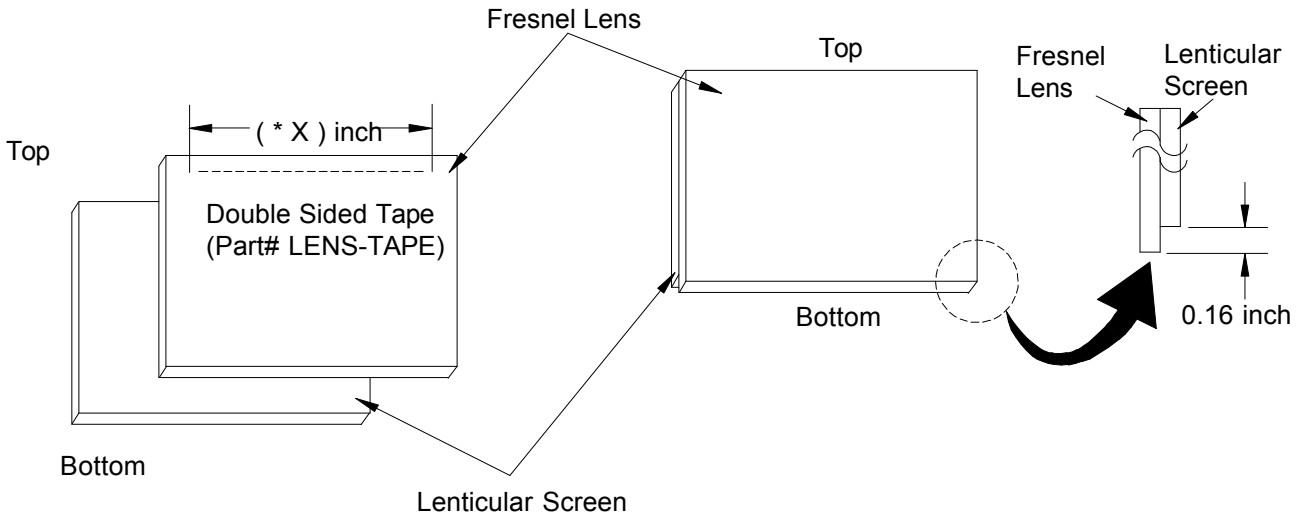

Figure 2-2

Model	Screen Size	Tape Length
WS-48315	48"	41.76
WS-55315	55"	47.85
WS-65315	65"	56.55

Table A

CABINET SEPARATION PROCEDURE
(WS-65315)

Modes WS-65315 cabinet is assembled in two pieces. These two pieces may be separated to allow easier delivery and setup.

Cabinet Separation Precedure

(Figure 1)

1. Pull the Speaker Grille off.
2. Unplug connectors “CC” and ZF.
3. Remove 4 screws “a” on both sides of the cabinet.

(Figure 2)

4. Carefully lift the cabinet top until the support tabs clear the bottom cabinet.

(Figure 3)

5. Carefully rotate the cabinet top and place it on the floor.
6. Reverse the procedure to mount the cabinet top on the cabinet bottom.

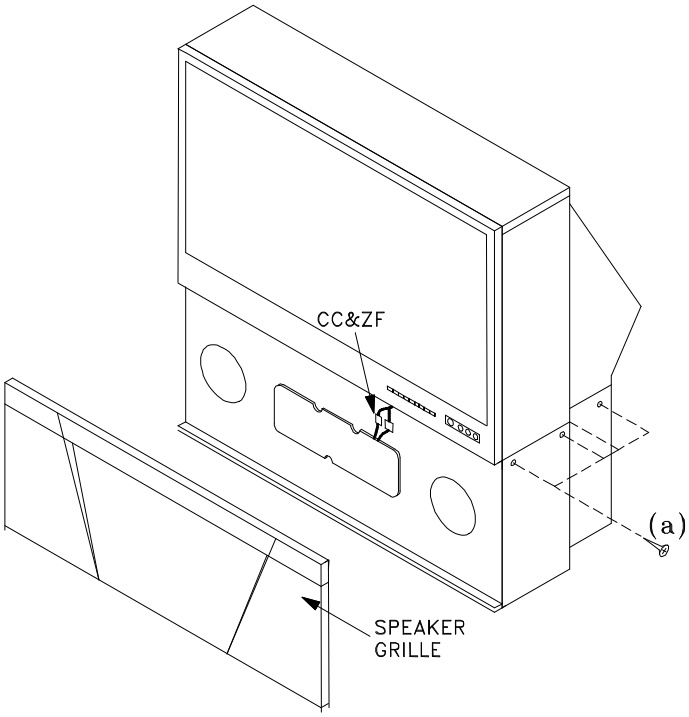

Figure 1

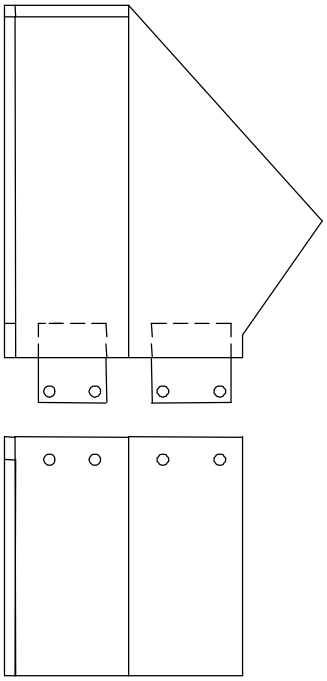

Figure 2

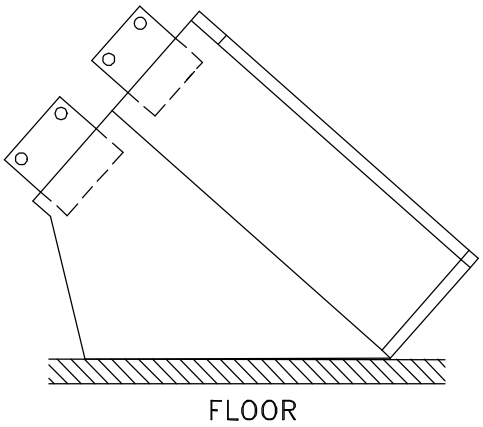

Figure 3

SERVICING THE DIAMONDSHIELD™

1. DiamondShield Removal Procedure

The location of the DiamondShield molding clips may vary between models, top and bottom, or sides. Use the appropriate disassembly procedure given below.

Note: ***Wear gloves when handling the DiamondShield to prevent finger prints.***

Top & Bottom Molding Clips

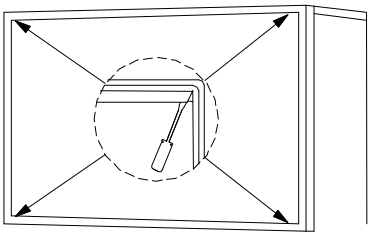

1. Gently insert a small screwdriver between the DiamondShield and one end of the clip to pry the clip loose.

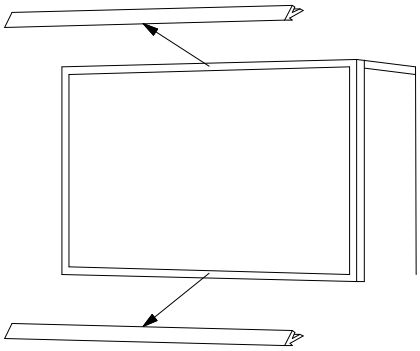

2. Remove both clips by pulling them toward you.

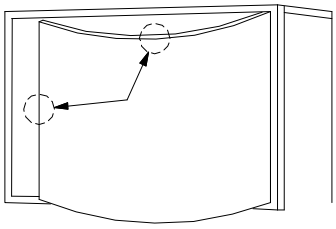

3. Carefully insert a small screwdriver into the gap at the top/center point of the Shield and pull the Shield slightly away from the unit. Place your hands at the points shown and gently bow the Shield toward you and remove from the unit. Then re-install the two clips.

Side Molding Clips

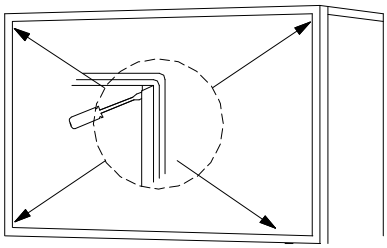

1. Gently insert a small screwdriver between the DiamondShield and one end of the clip to pry the clip loose.

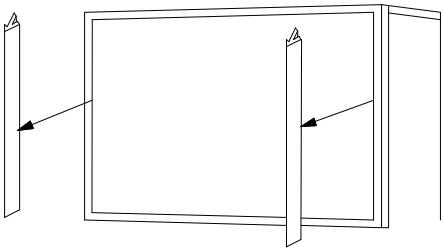

2. Remove both clips by pulling them toward you.

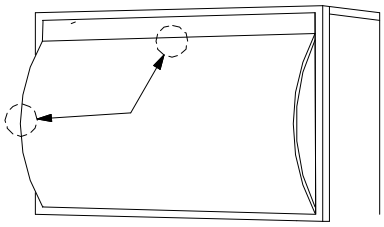

3. Carefully insert a small screwdriver into the gap at the side/center point of the Shield and pull the Shield slightly away from the unit. Place your hands at the points shown and gently bow the Shield toward you and remove from the unit. Then re-install the two clips.

2. DiamondShield Installation Procedure

*(See the Parts List for DiamondShield part numbers)

To install the DiamondShield, reverse the above Removal Procedure.

SERVICING PCBs

Chassis Removal and PCB Locations

Chassis Removal

1) Remove screw “a” from the Main Chassis.
2) Raise the two chassis locks on the inner sides of the Lightbox Assembly and slide the chassis towards the rear.

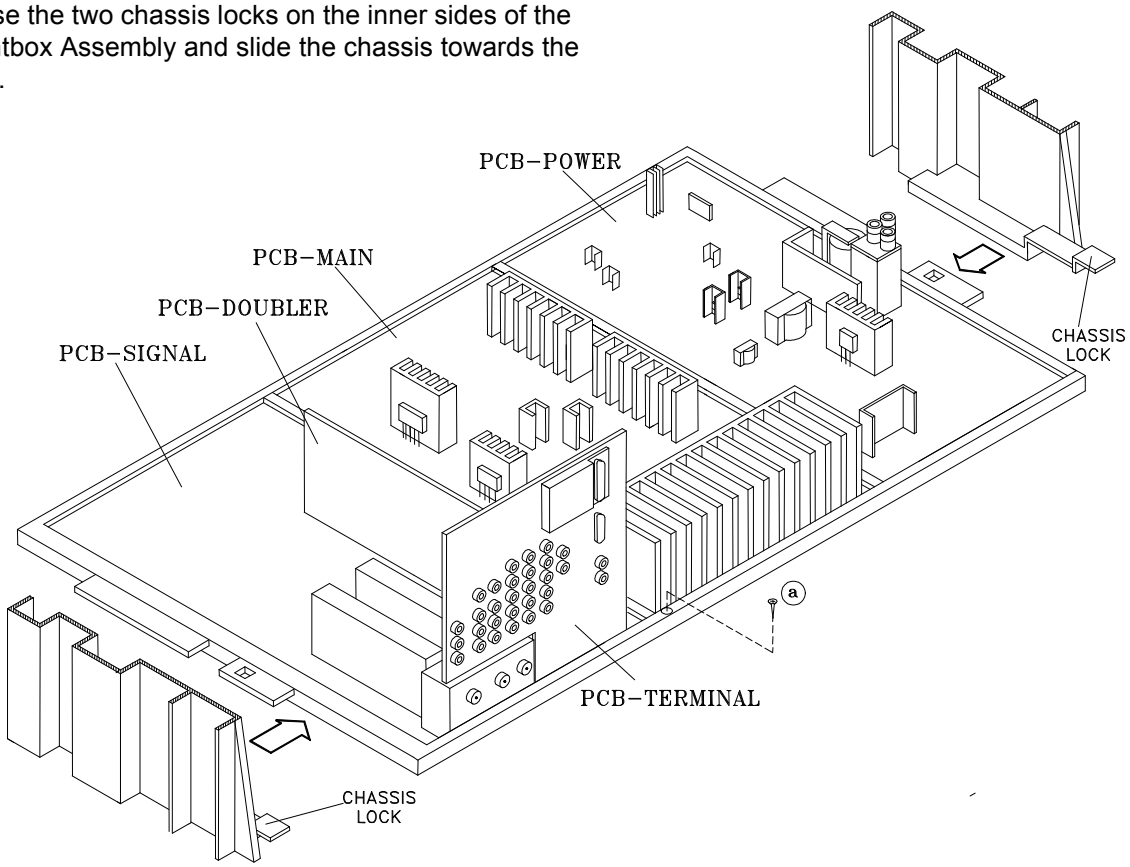

Major Part Locations

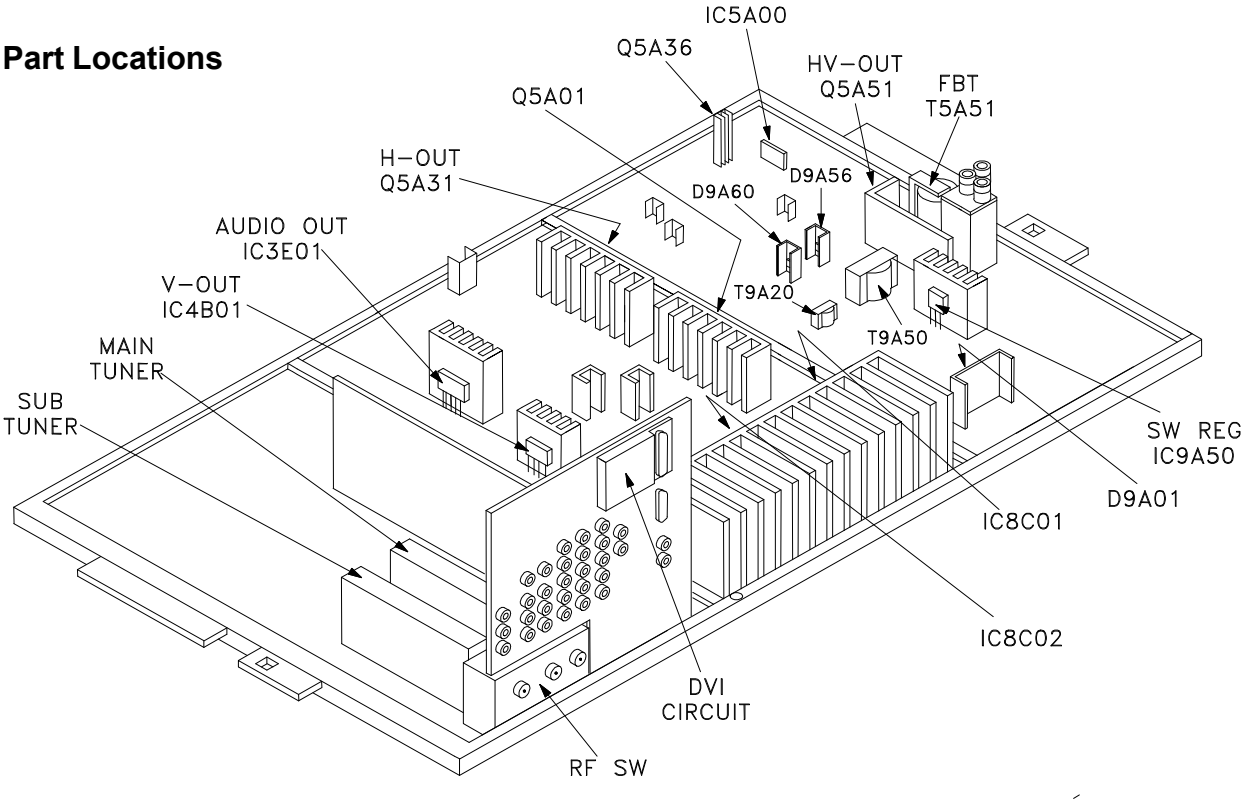

ANODE LEAD REMOVAL

CAUTION: To prevent damage, the following procedure must be used when removing an Anode Lead from the Flyback Transformer.

1) Push the Anode Lead down.

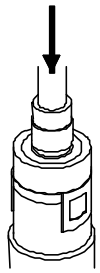

2) While holding the lead down rotate the lead 90º counter clockwise.

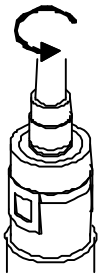

3) Carefully remove the Anode Lead from the Flyback Transformer.

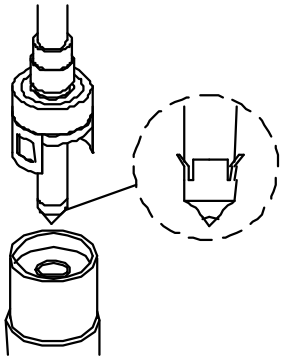

CRT REPLACEMENT

1. Removal of the CRT

Caution! High voltage should be completely discharged prior to CRT removal. Since the CRTs receive high voltage from the Flyback transformer, discharge by shorting the open end of the respective high voltage cable to chassis ground.

Note: Refer to Cabinet Disassembly when performing steps 1 through 2.

1. Remove the Speaker Grille, Front Board, and Screen Assy.
2. Remove the Back Board.
3. Remove the Anode Lead Wire from the Flyback transformer. (Use the above procedure)
4. Remove the PCB-CRT.
5. Remove 4 hex-screws "a" retaining the Optical Unit. [Figure 5-1]
6. Remove 4 screws "b" retaining the Lens.
   Note: DO NOT loosen the RED screws. Doing so will break the seal between the C-Element and the # 6 Lens, causing leakage of the CRT Coolant.
7. Remove 4 screws "c" retaining the CRT. [Figure 5-2]
8. Remove the Deflection Yoke and other CRT components from the neck of the CRT. [Figure 5-6]

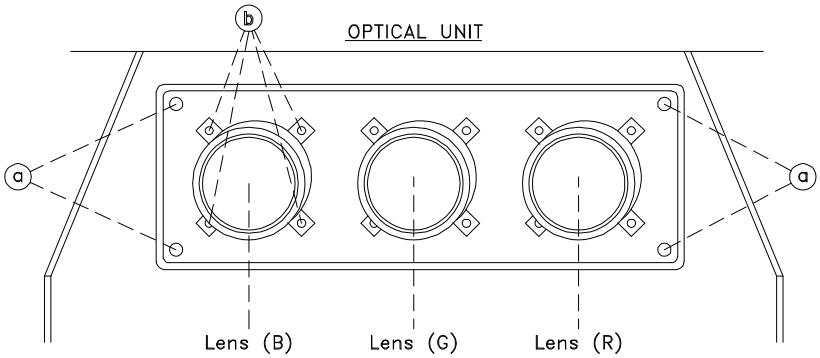

Figure 5-1

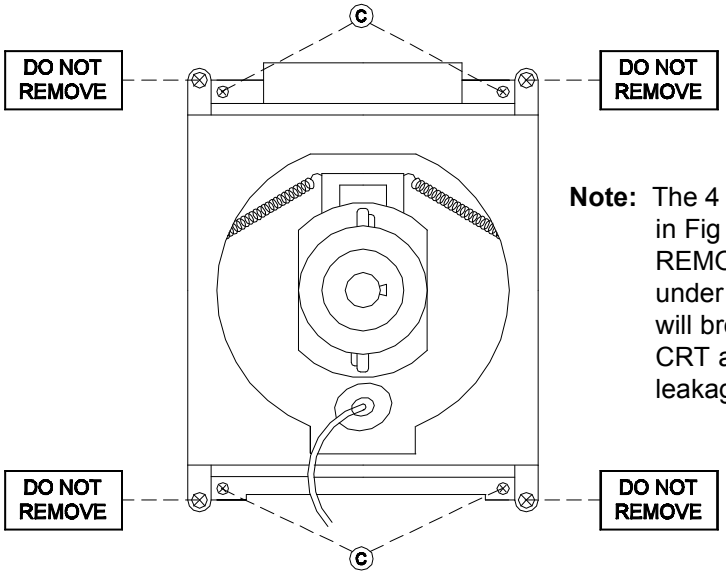

Note: The 4 spring-loaded screws shown in Fig 5-2 and labeled as "DO NOT REMOVE", should not be loosened under any circumstance. Doing so will break the seal between the CRT and the CRT-Spacer, causing leakage of the CRT Coolant.

Figure 5-2

2. Installation of the CRT

Note: The replacement CRT is supplied as an assembly comprised of the CRT and the Inner Lens with the space between them filled with ethylene glycol. Care should be taken during handling and installation to prevent shock from disrupting the seal or alignment between the CRT and Inner Lens. [Figure 5-3]

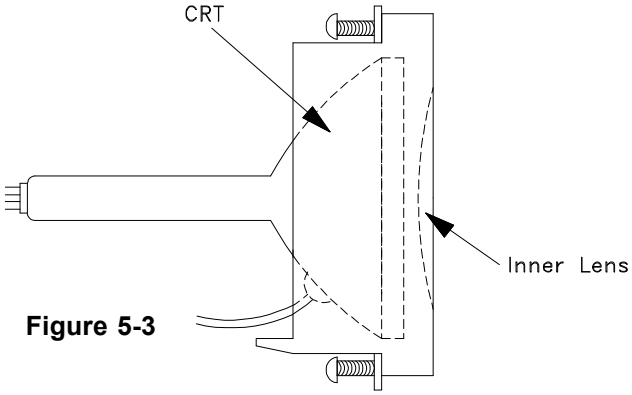

Figure 5-3

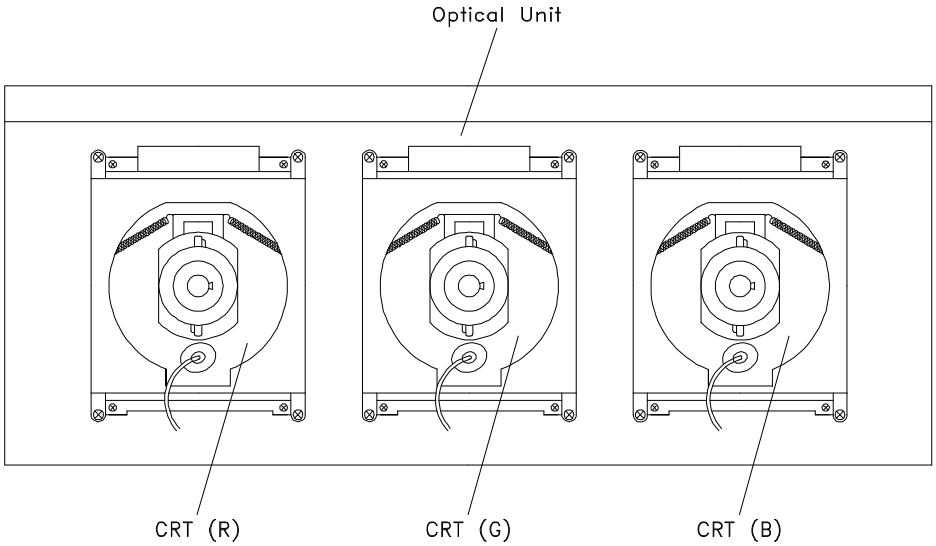

Figure 5-4

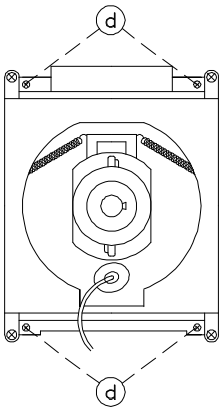

Figure 5-5

1. Carefully position the replacement CRT and fasten in place using 4 screws "d". [Figure 5-5]
2. Install the Deflection Yoke and other CRT components back in their original position on the CRT neck. [Figure 5-6]
3. Install the Lens that was removed in step 6 of Removal Of The CRT. [Figures 5-1 and 5-2]
   a) Position the Lens so that the Label faces the direction shown in Figure 5-7
   b) Install the mounting screws “b”. [Figure 5-1]
4. Insert the Optical Unit into the Light Box Assembly.5. Install the PCB-CRT.
6. Insert the Anode Lead Wire into the Flyback Transformer.
7. Re-clamp the Lead Wire in its original position.

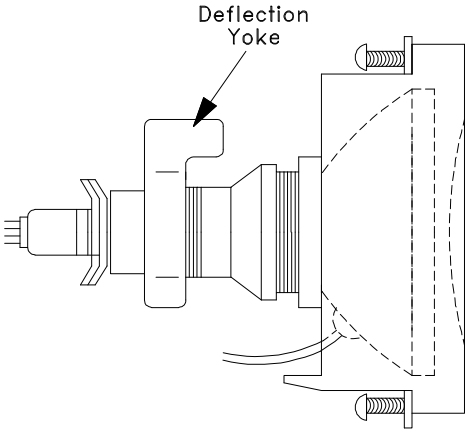

Figure 5-6

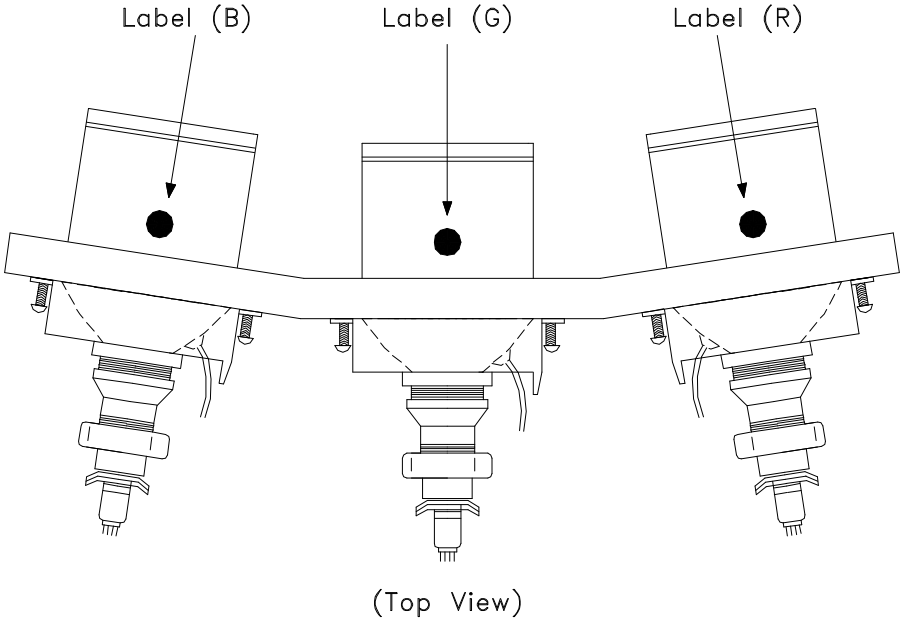

Figure 5-7

Adjustment procedures after replacing the CRT(s)

- CRT Cut Off / White Balance Adjustment
- Static Convergence Adjustment
- Dynamic Convergence Adjustment

ELECTRICAL ADJUSTMENTS

Note: Perform only the adjustments required.
Do not attempt an alignment if proper equipment is not available.

1. Test Equipment

- Oscilloscope (Unless otherwise specified, use 10:1 probes)
- Signal Generator (both SD and HD capable)
- Direct Current Voltmeter
- Direct Current Ampere Meter

2. Test Signal

A. Monoscope Signal

Note: If you do not have a monoscope signal source, connect the unit to a VCR and play a Monoscope *alignment tape. (* Part Number: 859C568060)

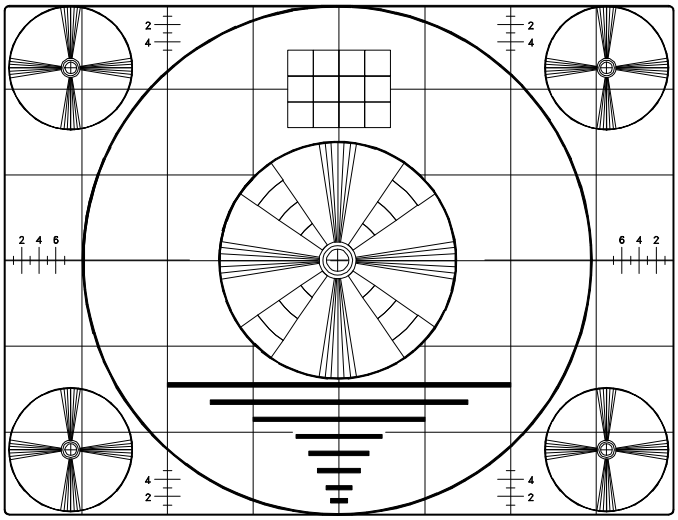

Monoscope Signal

B. Color Bar Signal

Use the color bar signal shown below, unless otherwise specified in this manual.

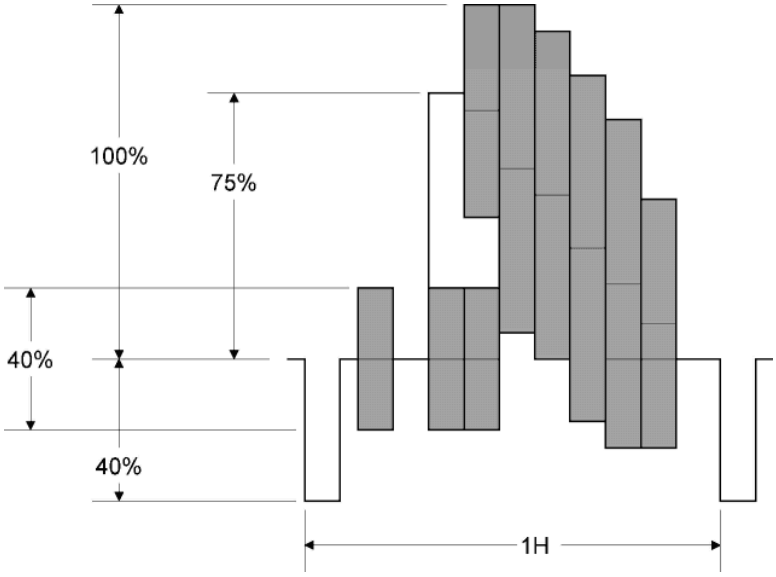

Split-Field Color Bars (100% window)

3. Initial Setup

A. Option Menu Setup

Follow the steps below for the initial set-up:

1. Select the "MENU" display by pressing the "MENU" button once.
2. Press the number buttons "0", "3", "7", "0" in sequence to select the "OPTION MENU" display.
3. Press the "ADJUST" button to select "INITIAL."
4. Press "ENTER."

   NOTE: At this time channel 3 is automatically selected.

MENU-0-3-7-0

OPTION MENU	
Initial	
Power Restore	:OFF
DTV Port	:Auto
Direct Key Mod	:OFF

B. Default Settings

MAIN MENU DEFAULT SETTINGS

SETUP Menu	
Memorize Channels	Ant-A Air
NetCommand® IR Setup	
Clock	
Language	English
Energy Mode	Standard
INPUT ASSIGNMENT Menu	
Antenna-A	On
Antenna-B	On
DTV	YPrPb
Component-1	Comp-1
Component-2	Comp-2
Input-1	Input-1
Input-2	Input-2
Input-3	Input-3
MonLink	MonLink
Welcome to NetCommand® IR	
Language	English
NetCommand® IR Setup	
CLOCK Menu	
Clock Setting	Manual
Clock Time	--:--
Set Day	Sunday
Time Zone	N/A
Daylight Savings Time	N/A
CAPTIONS Menu	
Closed Captions	In Mute
CC Background	Gray
CHANNEL EDIT Menu	
Antenna	ANT-A
Channel	003
Memory	Deleted
Name	N/A
SQV	N/A

V-CHIP LOCK Menu	
Lock by Time	Off
Lock Time	N/A
Unlock Time	N/A
Front Button Lock	Off
V-Chip	
V-CHIP Menu	
V-Chip	Off
TV Rating	TV-PG
FV-Fantasy Violence	Allow
D-Sexual Dialog	Allow
L-Adult Language	Allow
S-Sexual Situation	Allow
V-Violence	Allow
Movie Rating	PG
Programs Not Rated	Allow
V-CHIP Hours	
V-Chip Start Time	12:00am
V-Chip Stop Time	12:00am
ADVANCED FEATURES Menu	
Color Balance	
Timer	
Convergence	
Video Mute	On
Black Enhancement	On
COLOR BALANCE Menu	
Ant-A Auto Color Correction	Off
PerfectColor™	
Reset Color for Ant-A	
TIMER Menu	
Timer	Off
Set Time	12:00 am
Set Day	Everyday
Input	Ant-A
Channel	003

PerfectColor™	
Magenta	50%
Red	50%
Yellow	50%
Green	50%
Cyan	50%
Blue	50%
AUDIO/VIDEO SETTINGS Menu	
A/V Memory Reset	Ant A
TV Speakers (Internal)	On
Audio Output	Variable
AUDIO SETTINGS	
TV Bass	50%
TV Treble	50%
TV Balance	50%
TV Surround	Off
TV Listen To	Stereo
TV Level Sound	Off
VIDEO SETTINGS	
TV Contrast	100%
TV Brightness	50%
TV Sharpness	50%
TV Color	50%
TV Tint	50%
TV Color Temp	High
TV Video Noise	Standard
TV Film Mode (Auto)	On
TV VSM	On
TV Volume	30%
PIP Source	Ant A Ch 3
PIP Position	Lower Right
POP Position	Right Half
Format	Stretch
PIP/POP Format	Dble Win

Items in the table below are set following Initalization.

AV Memory Initial Settings

A/V Memory	Ant-A Ant-B	DTV	NTSC 1/2/3	COMP 1/2	MonLink
TV Contrast	Max	Max	Max	Max	Max
TV Brightness	Center	Center	Center	Center	Center
TV Sharpness	Center	Center	Center	Center	Center
TV Color	Center	Center	Center	Center	Center
TV Tint	Center	Center	Center	Center	Center
TV Color Temp.	High	High	High	High	High
Video Noise	Standard	Standard	Standard	Standard	Standard
TV Image Type	Video	Video	Video	Video	Video
TV SVM Sharpness	On	On	On	On	On
TV Bass	Center	Center	Center	Center	Center
TV Treble	Center	Center	Center	Center	Center
TV Balance	Center	Center	Center	Center	Center
TV Surrond	Off	Off	Off	Off	Off
TV Listen To	Stereo	Stereo	Stereo	Stereo	Stereo
TV Level Sound	Off	Off	Off	Off	Off

4. LED Indicator Diagnostics

The “Power ON LED” provides an indication of the sets operation, and the possible cause of a malfunction.

A. Initial Control Circuitry Check

Immediately after the TV is connected to an AC power source:

- The LED flashes three times ... indicating the Microprocessor has initialized and is functioning properly.
- If the LED does not flash ... the Microprocessor is NOT functioning.

B. Error Code Operational Check

Note: The TV must be in “Shut Down” and not heve been switched Off, to perform the Error Code Operational Check. When the TV is switched Off, the code automatically resets to “12” No Error.

Pressing the front panel “DEVICE” and “MENU” buttons at the same time, and holding for 5 seconds, activates the Error Code Mode. The LED flashes denoting a two digit Error Code, or indicating no problem has occured since the last Initalization.

Note: The front panel buttons must be used, NOT those on the Remote Control.

- The number of flashes indicates the value of the MSD (tens digit) of the Error Code.
- The flashing then pauses for approximately 1/2 second.
- The LED then flashes indicating the value of the LSD (ones digit) of the Error Code.
- The Error Code is repeated a total of 5 times.

  Example: If the Error Code is “23”, the LED will flash two times, pause, and then flashes three times.

C. Error Codes

The Error Code designations indicating a malfunction, or no malfunction, are listed below:

Error Code	Description
12	No error has occurred.
21	X-Ray Protect circuit.
22	Short Protect circuit.
23	Deflection failure.

5. Circuit Adjustment Mode

Except for the following, all adjustment items must be performed using the remote hand unit.

- CRT Cutoff
- Lens Focus
- Electrostatic Focus

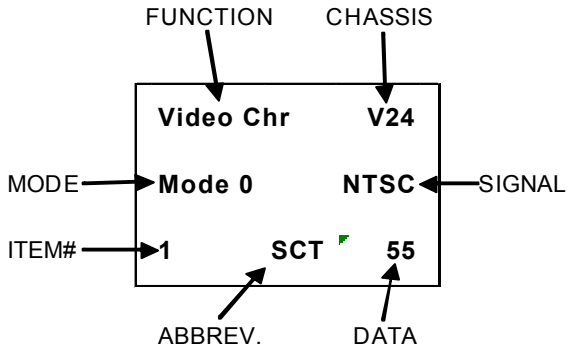

A. Activating the Circuit Adjustment Mode

1. Press the "MENU" button on a remote hand unit.
2. Press the number buttons "0", 3", "5", "7" in sequence. The screen will change to the Adjustment Mode.

Note: Repeat steps 1 and 2 if the circuit adjustment mode display does not appear on screen

B. Selection of adjustment Functions and Adjustment Items

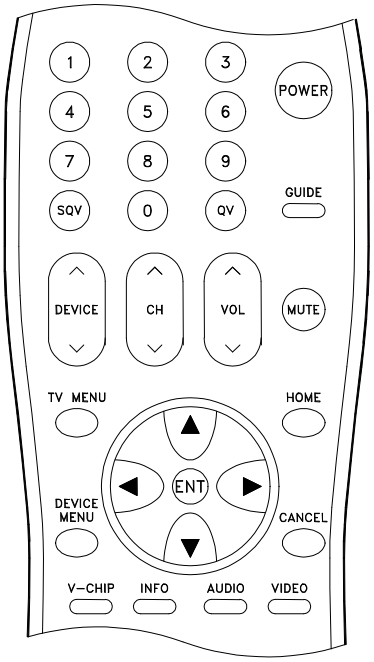

To select an adjustment item in the circuit adjustment mode, first select the adjustment function that includes the specific adjustment item to be selected. Then, select the adjustment item.

Refer to the following pages for the listing of adjustment functions and adjustment items.

1. Press the "AUDIO" button on a remote hand unit to select an adjustment function. Each time the button is pressed, the Function changes in the following sequence:

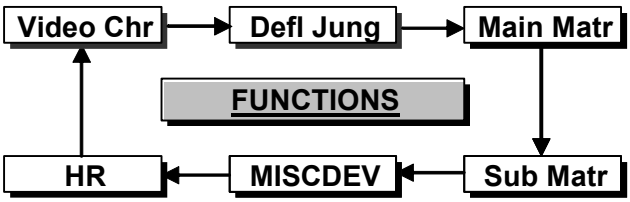

2. Press the “VIDEO” button to select a specific Adjustment Item. The Item number increases each time the “VIDEO” button is pressed.

C. Changing Data

After selecting an adjustment Item, use the “ADJUST UP/DOWN” button to change data.

- Press “ADJUST DOWN” to decrease the data value.
- Press “ADJUST UP” to increase the data value.

D. Saving Adjustment Data

Press “ENTER” to save adjustment data in memory. The character display turns red for approximately one second in this step.

Note: If the circuit adjustment mode is terminated without pressing “ENTER”, changes in adjustment data are not saved.

E. Terminating the Circuit Adjustment Mode

Press the “MENU” button on the remote hand unit twice to terminate the adjustment mode.

Note: The circuit adjustment mode can also be terminated by turning power OFF.

F. Service Mode Reset

To reset items in the service mode to their factory values:

1. Press MENU-0-3-5-7 to enter the Service Mode.
2. Press the “INPUT” or “DEVICE” button, on the front panel or the remote, and hold for 2 seconds.

6. Convergence Adjustment Mode

The Convergence mode is used to perform raster geometry correction, and convergence adjustments as specified in Adjustment Procedures 15 through 18.

A. Convergence Mode Activation

1. Press MENU-0-3-5-9
2. When the Convergence Mode is activated, the display at the right appears on a Green Crosshatch.

SD	**Coarse**	**GREEN**
1	**HSTA**	**-50**

Coarse Conv. Display

B. Selecting the HD or SD Mode

1. **Select the Signal Source** before entering the Convergence Mode, either an NTSC or HD source.
2. **Enter the Convergence Mode** (MENU-0-3-5-9)
   - If the signal source is NTSC, the SD mode is activated.
   - If the signal source is HD 1080i, the HD mode is activated.
3. **Activating the HD mode when no HD signal is available.**
   - Activate the Factory Option Menu (MENU-0-3-7-0)
   - Use the “Adjust” keys to select “DTV Port” and press “Enter” to change the setting to “1080i”. Sequence = “Auto”-”480i”-”480p”-”1080i”. **Ignore any loss of sync while changing modes.**
   - Exit the Option Menu (Press “MENU” twice).
   - Select the DTV Inputs as the signal source (INPUT or DEVICE button).
   - Activate the Convergence Mode ... the Convergence mode will be in the HD mode and the internal crosshatch is displayed.
4. **After adjusting Convergence, be sure to set the DTV Port back to AUTO.**
   - Select an analog input as the signal source (INPUT or DEVICE button).
   - Activate the Option Menu (MENU-0-3-7-0).
   - Use the “Adjust” keys to select “DTV Port and press “Enter” to change the setting from “1080i” to “AUTO”.
   - Exit the Option Menu (Press MENU twice).

C. Convergence Mode Functions

In the Convergence Mode there are three main Functions (Categories).

- Pressing “6” activates CONV MISC
- Pressing “5” activates COARSE CONV
- Pressing “4” activates FINE CONV

D. CONV MISC (Press 6)

This mode is used to preset data values controlling the Convergence Generator, and to perform the HV Regulation adjustment.

1. Use the VIDEO button to select an item.
2. Use the ADJUST buttons to change data.

Note: When Item “1 HVOL” is selected the screen goes black except for the data display. This occurs since a black screen is required when making the HV Regulation adjustment.

E. COARSE CONV (Press 5)

There are four Sub Functions in the Coarse mode, COARSE GREEN, RED and BLUE, and DF.

- COARSE GREEN .... used to make Coarse Raster Geometry Adjustments.
- COARSE RED ... used to make Coarse Red Convergence Adjustments.
- COARSE BLUE ... used to make Coarse Blue Convergence Adjustments.
- DF ... used to preset data values controlling the Dynamic Beam Focus circuit drive signal.

1. Use AUDIO button to select a Sub Function
2. Use the VIDEO button to select an Adjustment Item.
3. Use the ADJUST buttons to change data.

F. FINE CONV (Press 4)

Sub Functions

This mode is used to perform Fine Raster Correction, and Fine Red and Blue Convergence Adjustments. There are three Sub Adjustment Functions, selected with the AUDIO button:

- FINE GREEN .... a Green Crosshatch is displayed, for Fine Raster Corrections.
- FINE RED .... a White Crosshatch is displayed, for Fine Red Convergence Adjustments.
- FINE BLUE .... a White Crosshatch is displayed, for Fine Blue Convergence Adjustments.

Cursor

In the Fine mode a Cursor is added to the Crosshatch. The ENTER button toggles the Cursor between two modes:

- MOVE (blinking Cursor) .... use the ADJUST buttons to select any of 64 points on the Crosshatch.
- ADJUST (Non blinking Cursor) .... the ADJUST buttons adjust the active color at the current Cursor position, horizontally or vertically.

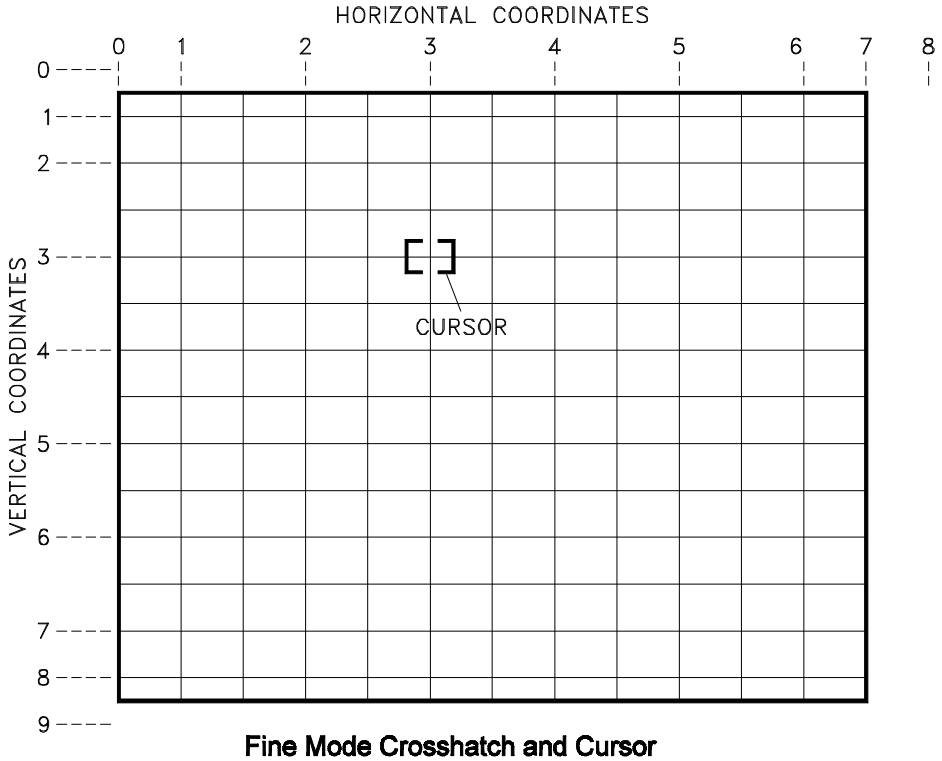

Fine Mode Crosshatch and Cursor

Cursor Coordinates

Specific intersections in the Crosshatch are assigned vertical and horizontal coordinates. These are shown in the preceeding diagram. The Cursor can only be moved to those positions that have coordinates assigned. If the Cursor is at coordinates outside the screen area, the Cursor will not be visible. Use the ADJUST buttons to move the Cursor to an intersection on the screen.

Display

The on-screen display changes in the Fine mode, as shown below. The display shows the vertical and horizontal data for the current Cursor Position, and the horizontal and vertical coordinates for that position.

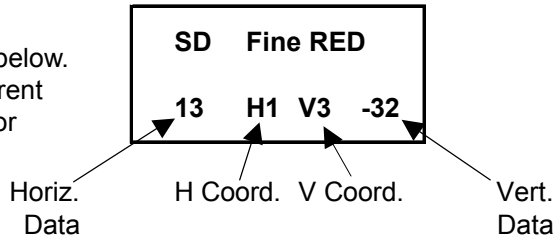

F. Saving Data and Exiting the Convergence Mode

Press MENU twice to exit the Convergence mode, data is automatically saved.

Note: If power is interrupted, or the "CANCEL" button is presssed prior to properly exiting the Convergence Mode, changes in adjustment data will not be saved. The data is restored to the last saved previous values.

ADJUSTMENT ITEMS LIST

Video Chroma Function

Item#	Abbrev.	Description	Data				Adjustment
			Range	480i	480p	1080i	
1	SCT	Picture Gain control	0~63	42	42	42	Sub Contrast
2	SBRT	Sub Brightness	0~63	20	20	20	Black Level
3	SCON	Sub Contrast	0~15	7	7	7	Preset
4	RDRH	R Drive (H temp)	0~63	31	31	31	White Balance
5	GDRH	G Drive (H temp)	0~63	41	41	41	Preset
6	BDRH	B Drive (H temp)	0~63	31	31	31	White Balance
7	CTRH	R Cutoff (H temp)	0~63	31	31	31	"
8	CTGH	G Cutoff (H temp)	0~63	31	31	31	Preset
9	CTBH	B Cutoff (H temp)	0~63	31	31	31	White Balance
10	RDRL	R Drive (L temp)	0~63	31	31	31	"
11	GDRL	G Drive (L temp)	0~63	41	41	41	Preset
12	BDRL	B Drive (L temp)	0~63	31	31	31	White Balance
13	CTRL	R Cutoff (L temp)	0~63	31	31	31	"
14	CTGL	G Cutoff (L temp)	0~63	31	31	31	Preset
15	CTBL	B Cutoff (L temp)	0~63	31	31	31	White Balance
16	GMMA	RGB Gamma Correction	0~3	2	2	2	Preset
17	GAML	Gamma Differential Corr. Switch	0~1	0	0	0	"
18	BRT	Brightness	0~63	31	31	31	"
19	COL	Color	0~63	38	34	33	White Balance
20	TINT	Tint	0~63	29**	30	29	Preset
21	SHRP	Sharpness	0~63	31	31	31	"
22	CBOF	Cb DC Offset	0~63	31	31	31	"
23	CROF	Cr DC Offset	0~63	31	31	31	"
31	VMLE	VM Output Level	0~3	1	1	2	"
40	AGIW	White output aging mode switch	0~1	0	0	0	"
55	ABLT	Threshold Adjust for ABL input	0~15	4*	4*	4*	"

* For models WS-65315 set data to 0

**For models WS-48315 set #20 TINT data to 29

For models WS-55315 set #20 TINT to 28

For models WS-65315 t #20 TINT data to 30

Deflection Jungle

Item	Abbrev.	Description		WS-48315		WS-55315		WS-65315	
			HD	NTSC	HD	NTSC	HD	NTSC	HD
1	HWID	Width	29	30	29	23	22	30	28
2	HKEY	Horiz. Keystone	25	24	25	24	25	24	25
7	VHGT	Height	16	18	16	14	13	33	31
8	VLIN	Vert. Linearity	5	5	5	5	5	7	7
9	VSCN	Vert. S Corr.	0	0	0	0	0	0	0
18	VPOS	Vert. Position	31	31	31	31	31	31	31
36	PINA	Pincushion Comp.	8	10	8	10	8	10	8

MAIN MATRIX

Item#	Abbrev.	Description	Data	
			Range	Initial
39	SCNT	Main Y-Out	0~31	16
41	SCLR	CbCr Amp	0~31	16

SUB MATRIX

Item#	Abbrev.	Description	Data	
			Range	Initial
39	SCNT	Main Y-Out	0~31	16
41	SCLR	CbCr Amp	0~31	16

MISCDEV **MENU-0-3-5-7**

Item#	Abbrev.	Description	Initial Data
474	OFFT	MLINK picture position	31
475	OFF2	MLINK picture position	31

HR **MENU-0-3-5-7**

Item#	Abbrev.	Description	Initial
1	HR	NTSC Disp.Pos.	29

CONVERGENCE MODE ITEMS

CONV MISC. **MENU-0-3-5-9-6**

Item#	Abbrev.	Description	Data		
			Range	SD	HD
1	HVOL	HV Adjust	0~352	150	150
2	VCNT	V-saw amplitude	0~127	29	29
3	VSTR	V-saw start timer	0~127	0	10
4	VOFS	V-saw offset	0~127	10	8
5	STLN	Start line	0~127	38	26
6	FPHS	Fine phase	0~352	303	294
7	CPHS	Coarse phase	0~31	15	15
8	HOFS	H-saw offset	0~127	22	22
9	DPHS	DF coarse horiz phase	0~31	1	1
10	DOFS	DF offset	0~127	34	34
11	TPHS	Test Pattern phase	0~352	43	39
12	TPVD	Test Pattern Vert. Position	0~127	23	39
13	ODEV	Odd/Even detection	0~352	24	42
14	HRTC	H-saw retrace	0~3	1	1
15	DRTC	DF retrace	0~3	1	1
16	DAC	External DAC selection	0~1	1	1
17	EPWP	EEPROM write protection	0~1	0	0

COARSE CONV GREEN — **MENU 0-3-5-9-5**

#	Abbrev	Description	WS-48315		WS-55315		WS-65315	
			SD	HD	SD	HD	SD	HD
1	HSTA	Horiz. Position	0	0	0	0	0	0
2	VSTA	Vert. Position	0	0	0	0	0	0
3	SKEW	Skew (Y axis)	0	0	0	0	0	0
4	TILT	Tilt (X axis)	0	0	0	0	0	0
5	HWID	Width	20	20	20	20	20	20
6	HLIN	Horiz. Linearity	0	0	0	0	0	0
7	SPCC	Side PC Corr.	0	0	0	0	0	0
8	HKEY	Horiz. Keystone	23	20	15	10	0	0
9	TBPC	Top/Bottom PC	-180	-160	-190	-165	-200	-175
10	VKEY	Vert. Keystone	0	0	0	0	0	0
11	VWID	Height	30	20	30	20	30	20
12	VLIN	Vert. Linearity	0	0	0	0	0	0

COARSE CONV RED — **MENU 0-3-5-9-5**

#	Abbrev	Description	WS-48315		WS-55315		WS-65315	
			SD	HD	SD	HD	SD	HD
1	HSTA	Horiz. Position	50	50	50	50	50	50
2	VSTA	Vert. Position	0	0	0	0	0	0
3	SKEW	Skew (Y axis)	0	0	0	0	0	0
4	TILT	Tilt (X axis)	0	0	0	0	0	0
5	HLIN	Horiz. Linearity	-220	-200	-215	-195	-170	-150
6	HWID	Width	0	0	0	0	10	10
7	VKEY	Vert. Keystone	-90	-90	-75	-75	-90	-75
8	VWID	Height	0	0	0	0	0	10
9	VLIN	Vert. Linearity	0	0	0	0	0	0
10	TBPC	Top/Bottom PC	20	20	20	20	20	20
11	SDBW	Side Bow	30	30	30	30	30	30

COARSE CONV BLUE — **MENU 0-3-5-9-5**

#	Abbrev	Description	WS-48315		WS-55315		WS-65315	
			SD	HD	SD	HD	SD	HD
1	HSTA	Horiz. Position	-50	-50	-50	-50	-50	-50
2	VSTA	Vert. Position	0	0	0	0	0	0
3	SKEW	Skew (Y axis)	0	0	0	-5	0	0
4	TILT	Tilt (X axis)	0	0	0	0	0	0
5	HLIN	Horiz. Linearity	220	200	220	205	175	160
6	HWID	Width	0	-15	0	0	10	10
7	VKEY	Vert. Keystone	90	90	90	70	80	75
8	VWID	Height	0	0	0	0	0	0
9	VLIN	Vert. Linearity	0	0	0	0	0	0
10	TBPC	Top/Bottom PC	-20	0	0	0	-20	0
11	SDBW	Side Bow	-30	-30	-30	-30	-30	-30

DF — **MENU-0-3-5-9-5**

Item	Abbr.	WS-48315 / WS-55315		WS-65315	
		SD Data	HD Data	SD Data	HD Data
0	DFH	-220	-220	-280	-250
1	DFV	-100	-100	-110	-95

Adjustment Test Point Locations

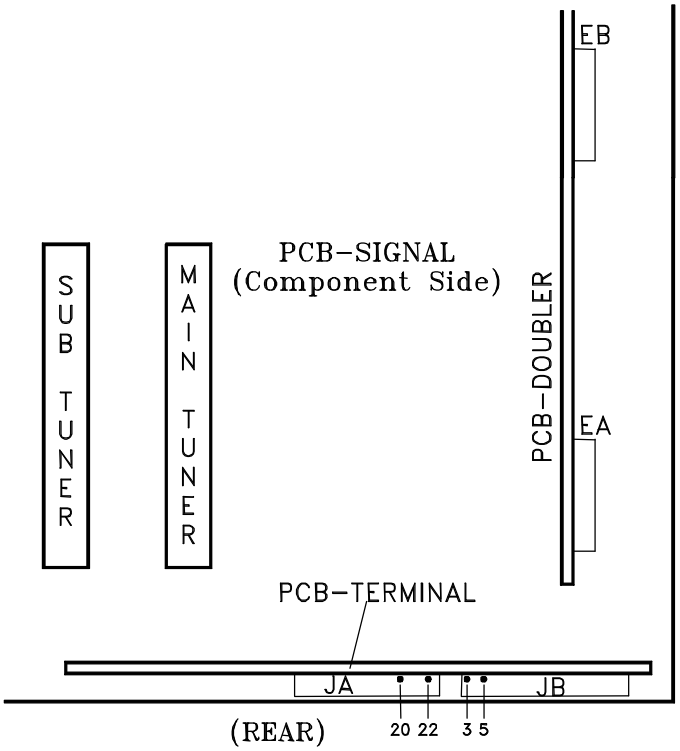

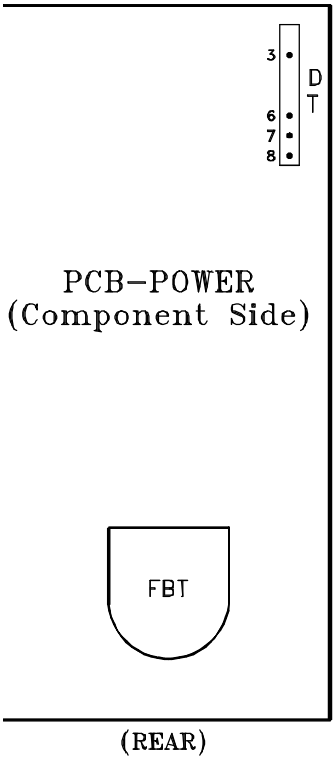

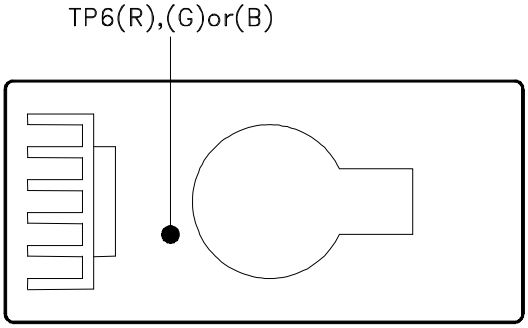

Test Points

DT pin 3 - HV Adjust
DT pin 6 - Ground
DT pin 7 - 12 Volts
DT pin 8 - ACL
JA pin 22 - Main Picture (Y)
JA pin 20 - Main Color (Pr)
JB pin 3 - Sub Picture (Y)
JB pin 5 - Sub Picture (Cr)
TP6(R, G or B) - CRT Cathode

[HV Circuit]

1. HV Regulation

Purpose: To set the CRT Anode voltage.

Symptom: Dark Picture

Measuring Instrument	DC Voltmeter
Test Point	DT connector pins 3 & 6
Ext. Trigger	------
Measuring Range	-------
Input Signal	Video Signal Monoscope
Input Terminal	Video Input

Note: *This adjustment must be rechecked following Adjustment 9 CRT Cutoff.*

1. Supply a video monoscope signal.
2. Set Contrast to maximum, and Brightness to mid position.
3. Connect a DC volt meter between pins 3 and 6 of the DT connector. (Positive lead to pin 3)
4. Activate the Conv-Misc Mode.
5. Select Item “1 HVOL” (screen goes black).
6. Adjust Item “1 HVOL” for 15.4V ±0.02V on the meter.
7. Save data and exit the Conv-Misc mode.
8. Confirm that the voltage does not change more than 0.15V.

Note: *This adjustment must be performed if E2RESET or Convergence E2RESET are activated.*

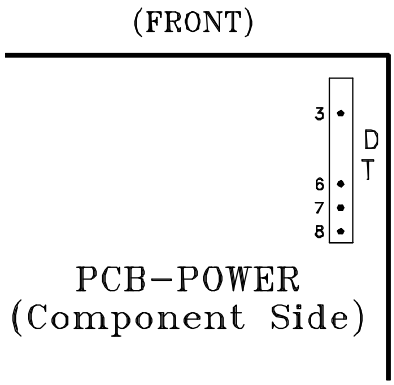

CONVERGENCE MODE

Activate ……..MENU-0-3-5-9
Misc. ……."6"
Coarse……..…."5"
Fine ……..."4"
Color (R,G or B)……AUDIO
Item No……..…..VIDEO
Adjust/Move…….ADJUST
Cursor Toggle……..ENTER
Save & Exit…..MENU (twice)

[Video Circuit]

2. Main/Sub Y Level

Purpose: To set picture luminance

Symptom: Excess or insufficient brightness.

Measuring Instrument	Oscilloscope
Test Point	JA Connector pin 22 JB Connector pin 3
Ext. Trigger	------
Measuring Range	------
Input Signal	Color Bars
Input Terminal	Video Input

1. Supply a color bar signal to a Video Input (not an RF input).
2. Select the color bar signal for both the main and sub pictures.
3. Connect the oscilloscope to connector JA pin 22 (Main-Y).
4. Activate the Adjustment Mode
5. Select Item “39 SCNT” in the Main Matrix function.
6. Adjust the data so the Main-Y signal is between 0.71 Vp-p max. and 0.66 Vp-p min. at JA pin 22.
   (If it cannot be adjusted within this range, set to the lowest closest value)
7. Move the oscilloscope to connector JB pin 3 (Sub-Y).
8. Select Item “39 SCNT” in the Sub Matrix function.
9. Adjust the data to equal the MAIN-Y Gain (+0.0V -0.05V).
10. Press “ENTER” to save data.

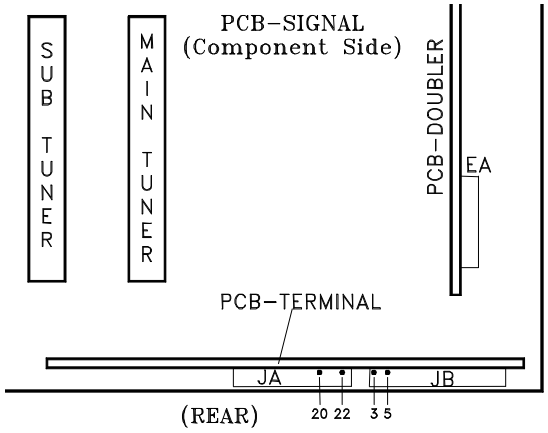

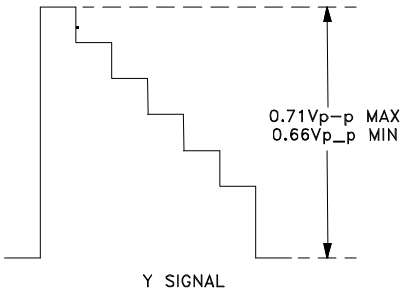

CIRCUIT ADJUST MODE

Activate …….. MENU-0-3-5-7
Function …..……..AUDIO
Item No. ……..……VIDEO
Adjust Data ……..ADJUST
Save Data …. ……ENTER
Exit ……..MENU (twice)

[Video Circuit]

3. Main/Sub Color Level

Purpose: To match the sub picture color to that of the main picture.

Symptom: Main and sub pictures colors differ.

Measuring Instrument	Oscilloscope
Test Point	JA pin 20 JB pin 5
Ext. Trigger	------
Measuring Range	------
Input Signal	Color Bars
Input Terminal	Video

1. Supply an NTSC signal to an External Video Input.
2. Select the NTSC signal as the source for both the main and sub pictures.
3. Connect an oscilloscope to connector JA pin 20 (Main PR).
4. Activate the Adjustment mode.
5. Select Item “41 SCLR” in the Main Matrix Function.
6. Adjust data so the PR signal is 0.71 Vp-p max. - 0.66 Vp-p min
   (If it cannot be adjusted within this range, set to the lowest closest value)
   When using a Leader 480, set to 0.585±0.02Vp-p.
7. Connect an oscilloscope to connector JB pin 5 (Sub PR).
8. Select item “41 SCLR” in the Sub Matrix Function.
9. Adjust so Sub PR = Main PR (+0.0V -0.05V)
10. Press “ENTER” to save data.

CIRCUIT ADJUST MODE

Activate …….. MENU-0-3-5-7
Function …...……..AUDIO
Item No. ……..……VIDEO
Adjust Data ……..ADJUST
Save Data …. ……ENTER
Exit ……..MENU (twice)

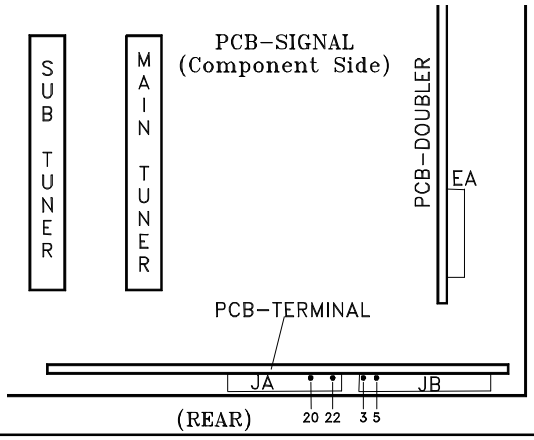

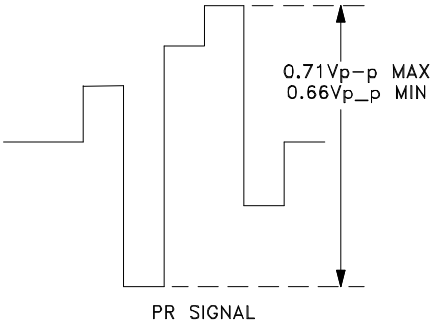

[CRT Circuit]

4. CRT Cutoff

Purpose: To set the cutoff point for all three CRTs.

Symptom: Monochrome has a color tint, or incorrect brightness.

Measuring Instrument	Oscilloscope
Test Point	TP6R, TP6G, TP6B
Ext. Trigger	------
Measuring Range	50V/Div. 2msec/Div.
Input Signal	None
Input Terminal	Video Input

Note: ***Use the Expand mode (full screen)***

1. Select an External Input with no signal.
2. Enter the Adjustment Mode, Video Chroma Function.
3. Press “1”, automatically blanks the screen and sets COL to 0.
4. Set the data to the values given in the table below.
5. Connect the oscilloscope to TP6R.
6. Adjust the Red Screen VR so the black level is 170V, as shown below, or 178V ±1VDC using an DC Voltmeter.
7. Repeat Steps 4 and 5 to set the Blue and Green Screen VRs, using TP6G and TP6B.

Note: *White Balance must be performed after this adjustment.*

CIRCUIT ADJUST MODE

Activate …….. MENU-0-3-5-7
Function …...……..AUDIO
Item No. ……..……VIDEO
Adjust Data ……..ADJUST
Save Data …. ……ENTER
Exit ……..MENU (twice)

VC Preset Data

Item	Abbr	Data
1	SCT	42
2	SBRT	20
3	SCON	7
4	RDRH	31
5	GDRH	41
6	BDRH	31
7	CTRH	31
8	CRGH	31
9	CTBH	31

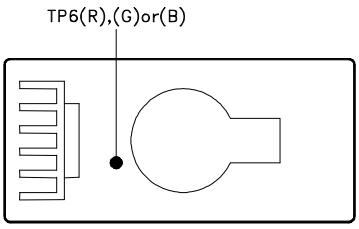

PCB-CRT(R),(G)or(B)

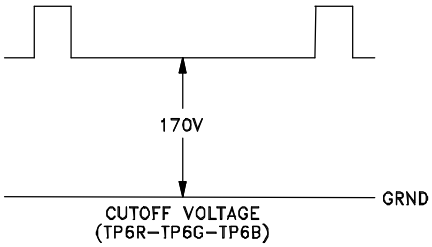

[CRT Circuit]

5. White Balance (NTSC)

Purpose: To set the CRTs white level in the NTSC mode.

Symptom: Monochrome has a color tint.

Measuring Instrument	DC Voltmeter
Test Point	------
Ext. Trigger	------
Measuring Range	------
Input Signal	NTSC White Raster
Input Terminal	RF or Video

CIRCUIT ADJUST MODE

Activate …….. MENU-0-3-5-7
Function …...……..AUDIO
Item No. ……..……VIDEO
Adjust Data ….……ADJUST
Save Data …. ……ENTER
Exit ……..MENU (twice)

Note: ***Use the "FORMAT" button to activate the Expand mode (full screen).***

1. Supply a full White Raster Signal
2. Activate the Service Mode, Video Chroma Function.
3. Set the data for Item "19 COL" to 0.
4. Adjust Items "4 RDRH" and "6 BDRH" for optimum white at the center of the screen.
5. Reduce the input luminance level to 25%.
6. Adjust Items "7 CTRH" and "9 CTBH" for optimum white.
7. Open pin 6 of each CRT, an insert a Milliammeter in series with each CRT Cathode. The maximum allowable current for each CRT is given in the table below.
8. Set the white raster to 100% and adjust Items "10 RDRL" and "12 BDRL" for optimum white at the center of the screen.
9. Reduce the luminance level to 25%.
10. Adjust Item "13 CTRL" and "15 CTBL" for optimum white.
11. Set the data for Item "19 COL" back to 31.
12. Press "ENTER" to save data.

Max CRT Current

CRT	ALL
Red	580 ua
Green	580 ua
Blue	580 ua

[CRT Circuit]

6. White Balance (HD)

Purpose: To set the CRTs white level in the HD mode.

Symptom: Monchrome pictures have a color tint.

Measuring Instrument	-----
Test Point	-----
Ext. Trigger	------
Measuring Range	-----
Input Signal	HD White Raster
Input Terminal	DTV Inputs

CIRCUIT ADJUST MODE

Activate …….. MENU-0-3-5-7
Function …...……..AUDIO
Item No. ……..……VIDEO
Adjust Data ….……ADJUST
Save Data …. ……ENTER
Exit ……..MENU (twice)

1. Supply an HD Full White Raster signal to the DTV Inputs.
2. Select the DTV Inputs (Input button)
3. Activate the Adjustment mode, Video Chroma Function.
4. Set Item "19 COL" to 0.
5. Adjust Items "4 RDRH" and "6 BDRH" for optimum white at the center of the screen.
6. Reduce the input signal luminance to 25%.
7. Adjust Items "7 CTRH" and "9 CTBH" for optimum white.
8. Set the white raster to 100% and adjust Items "10 RDRL" and "12 BDRL" for optimum white at the center of the screen.
9. Reduce the luminance level to 25%.
10. Adjust Item "13 CTRL" and "15 CTBL" for optimum white.
11. Set the data for Item "19 COL" back to 31.
12. Press "ENTER" to save data.

[Video Circuit]

7. Black Level

Purpose: To set the black level of the picture.

Symptom: Excess or insufficient brightness.

Measuring Instrument	-----
Test Point	-----
Ext. Trigger	------
Measuring Range	------
Input Signal	Monoscope
Input Terminal	Video Input

1. Supply a Monoscope signal to a Video Input.
2. Activate the Adjust Mode, Video Chroma Function.
3. Adjust Item “2 SBRT” so the 0% and 10% black levels on the gradation scale are the same.
4. Press ENTER to save data.
7. Exit the Service Mode.

NOTE: Item 2 SBRT should be no more than “21”.

CIRCUIT ADJUST MODE

Activate …….. MENU-0-3-5-7
Function …..……..AUDIO
Item No. ……..……VIDEO
Adjust Data ……..ADJUST
Save Data …. ……ENTER
Exit ……..MENU (twice)

40%	30%	20%	10%
50%	0%	0%	0%
60%	70%	80%	90%

GRADATION SCALE

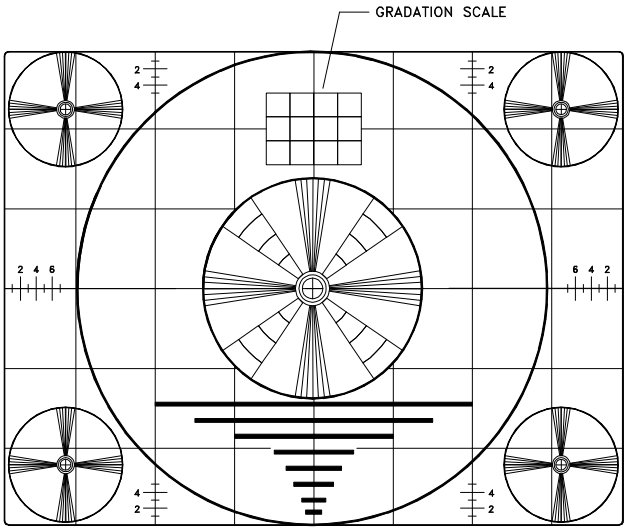

[Video Circuit]

8. Sub Contrast

Purpose: To set overall beam current to its’ optimum level.

Symptom: Excess or insufficient contrast.

Measuring Instrument	DC ma meter
Test Point	DT connector pins 7 & 8
Ext. Trigger	------
Measuring Range	-----
Input Signal	Grayscale
Input Terminal	RF Input

Note: Activate the Expand mode (full screen).

1. Supply a Grayscale signal to a RF Input.
2. Activate the Adjust Mode, Video Chroma Function.
3. Select Item “1 SCT”, signal level automatically reduces.
4. Connect a 3ma DC meter between DT connector pins 7 and 8. Positive lead to pin 7.
5. Adjust Item “1 SCT” for the current given in the table below.
6. Remove the meter.
7. Press “ENTER” to save data.
8. Exit the Service Mode.

CIRCUIT ADJUST MODE

Activate …….. MENU-0-3-5-7
Function …..……..AUDIO
Item No. ……..……VIDEO
Adjust Data ……..ADJUST
Save Data …. ……ENTER
Exit ……..MENU (twice)

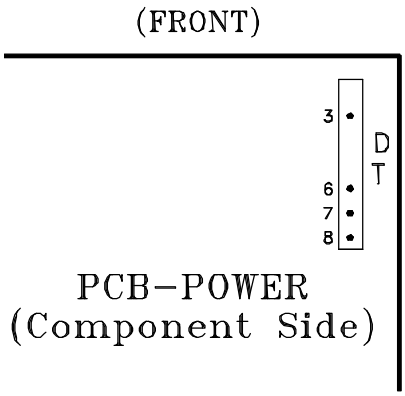

Sub Contrast Current Alignment

WS-48315 / WS-55315	WS-65315
520 ±10ua	550 ±10ua

[Focus Circuit]

9. Dynamic Focus Preset

Purpose: To improve edge focus.

Symptom: Poor focus at the edges of the screen.

Measuring Instrument	-----
Test Point	-----
Ext. Trigger	------
Measuring Range	-----
Input Signal	Monoscope
Input Terminal	Video Input

1. Supply a Monoscope signal to a Video Input
2. Activate the Convergence Mode.
3. Select the DF Function under the Conv. Coarse Mode.
4. Set Items “0 DFH” and “1 DFV” to the data values given in the DF Table.
5. Press “6” to activate CONV-MISC
6. Set “0 FPHS” and “1 DPHS” to data values given in the CONV-MISC Table.
7. Press “ENTER” to save data.
8. Exit the Conv. Mode.

CONVERGENCE MODE

Activate ……..MENU-0-3-5-9
Misc. ……."6"
Coarse……."5"
Fine ……."4"
Color (R,G or B)……AUDIO
Item No……..VIDEO
Adjust/Move…….ADJUST
Cursor Toggle……..ENTER
Save & Exit…..MENU (twice)

DF **MENU-0-3-5-9-5**

Item	Abbr.	WS-48315 / WS-55315		WS-65315	
		SD Data	HD Data	SD Data	HD Data
1	DFH	-220	-220	-280	-250
2	DFV	-100	-100	-110	-95

CONV MISC
(MENU-0-3-5-9-6)

Item	Abbr.	SD & HD
9	DPHS	1
10	DOFS	34

[Video Circuit]

10. Lens Focus

Purpose: To set the Lens position for optimum focus.

Symptom: Poor focus

Measuring Instrument	-----
Test Point	------
Ext. Trigger	------
Measuring Range	-----
Input Signal	Monoscope
Input Terminal	Video Input

Note: *This adjustment must be done before Electrostatic Focus. Perform this adjustment for RED, GREEN, and BLUE monochrome pictures.*

1. Supply a VIDEO signal (Monoscope).
2. Cover the Red and Blue Lens (producing a green raster).
3. Adjust the Green Lens for best focus at the center of the Monoscope pattern.

   Note: *Attach a white paper to the screen center. During adjustment, observe the picture on the screen from inside for easier adjustment.*

4. Repeat Steps 2 and 3 for the Red and Blue monochrome pictures.

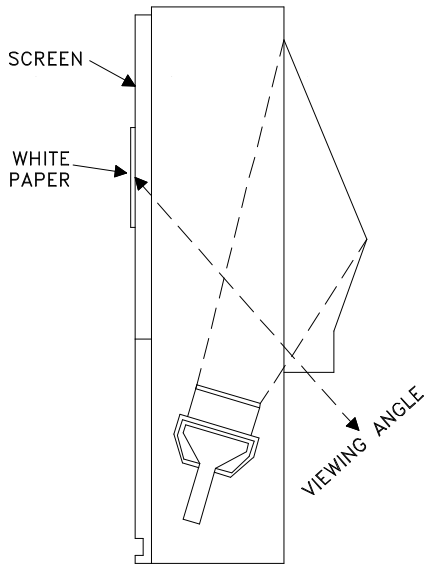

[CRT Circuit]

11. Electrostatic Focus & Beam Forming Magnet

Purpose: To set electrostatic focus to the optimum point.

Symptom: Poor focus.

Measuring Instrument	-----
Test Point	-----
Ext. Trigger	------
Measuring Range	------
Input Signal	Monscope & Crosshatch
Input Terminal	Video Input

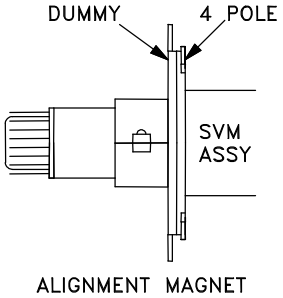

Note: *This adjustment must be performed after the Sub Contrast adjustment.*

Alignment Magnet Adjustment *This adjustment must be performed before Static Focus Adjustment*

1. Set the display to the "Standard" mode (Format button)
2. Supply a Crosshatch with Center Dot signal to a Video Input.
3. Select a Green raster using the table below.
4. Roughly adjust Green Focus VR.
5. Rotate Green Focus VR CCW so the center dot is about 10mm diameter.
6. Adjust the Green 4 Pole Magnet for the roundest center dot.
7. Set the Green Focus VR for optimum focus.
8. Repeat the procedure with a Red raster and adjust the Red 4 Pole Magnet.
9. Use silicon to lock the magnets in place.

Static Focus Adjustment (All Models)

1. Supply a Monoscope signal to a Video Input
2. Activate A/V Reset
3. Select Red, Green or Blue rasters using the table below.
3. Set the Red, Green and Blue Focus VRs for optimum focus at the top center of the picture..

Raster Color Selection

Color Raster	Activation Code
Red	MENU-0-3-5-9-1
Green	MENU-0-3-5-9-2
Blue	MENU-0-3-5-9-3

[On Screen Display]

12.Character Position

Purpose: To position the character display horizontally.

Symptom: Incorrect display position

Measuring Instrument	-----
Test Point	-----
Ext. Trigger	------
Measuring Range	------
Input Signal	Video Signal (HD/NTSC)
Input Terminal	ANT-A/DTV

1. Supply a Monoscope signal to the Video or RF Input.
2. Select the Monoscope as the source for the main picture (Input button).
3. Activate the Service Mode, HR Function.
4. Use the Adjust Right/Left buttons to center the display horizontally. (A = B)
5. Save data and exit the Service Mode..

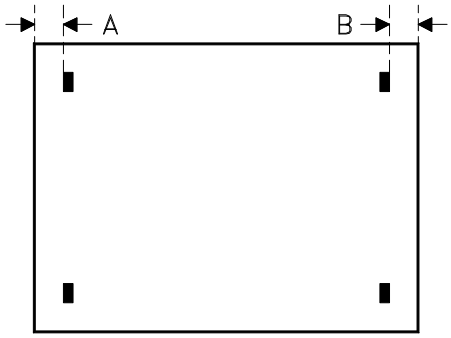

CIRCUIT ADJUST MODE

Activate …….. MENU-0-3-5-7
Function …..……..AUDIO
Item No. ……..……VIDEO
Adjust Data ……..ADJUST
Save Data …. ……ENTER
Exit ……..MENU (twice)

[Conv/Defl]

13. Geometry Preset

Purpose: To preset data controlling raster geometry

Symptom: Raster distortion.

Measuring Instrument	-----
Test Point	------
Ext. Trigger	------
Measuring Range	-----
Input Signal	NTSC & HD
Input Terminal	Video & DTV Inputs

Note: *This procedure is usually only necessary if an E2PROM is replaced in the TV Control or Convergence circuits.*

Procedure

In the Circuit Adjustment and Coarse Convergence Modes pre-set the data to the values given in the Tables below.

Deflection Jungle **Menu-0-3-5-7**

#	Abbrev.	WS-48315		WS-55315		WS-65315	
Item	Abbr.	NTSC	HD	NTSC	HD	NTSC	HD
1	HWID	30	29	23	22	30	28
2	HKEY	24	25	24	25	24	25
7	VHGT	18	16	14	13	33	31
8	VLIN	5	5	5	5	7	7
9	VSCN	0	0	0	0	0	0
18	VPOS	31	31	31	31	31	31
36	PINA	10	8	10	8	10	8

Coarse Conv. Green **(Menu-0-3-5-9-5)**

#	Abbrev.	WS-48315		WS-55315		WS-65315	
		SD	HD	SD	HD	SD	HD
1	HSTA	0	0	0	0	0	0
2	VSTA	0	0	0	0	0	0
3	SKEW	0	0	0	0	0	0
4	TILT	0	0	0	0	0	0
5	HWID	20	20	20	20	20	20
6	HLIN	0	0	0	0	0	0
7	SPCC	0	0	0	0	0	0
8	HKEY	23	20	15	10	0	0
9	TBPC	-180	-160	-190	-165	-200	-175
10	VKEY	0	0	0	0	0	0
11	VWID	30	20	30	20	30	20
12	VLIN	0	0	0	0	0	0

Coarse Conv. Red **Menu-0-3-5-9-5**

#	Abbrev	WS-48315		WS-55315		WS-65315	
		SD	HD	SD	HD	SD	HD
1	HSTA	50	50	50	50	50	50
2	VSTA	0	0	0	0	0	0
3	SKEW	5	5	5	5	0	0
4	TILT	0	0	0	0	0	0
5	HLIN	-220	-200	-215	-195	-170	-150
6	HWID	0	0	0	0	10	10
7	VKEY	-90	-90	-75	-75	-90	-75
8	VWID	0	0	0	0	0	10
9	VLIN	0	0	0	0	0	0
10	TBPC	20	20	20	20	20	20
11	SDBW	30	30	30	30	30	30

Coarse Conv. Blue **Menu-0-3-5-9-5**

#	Abbrev	WS-48315		WS-55315		WS-65315	
		SD	HD	SD	HD	SD	HD
1	HSTA	-50	-50	-50	-50	-50	-50
2	VSTA	0	0	0	0	0	0
3	SKEW	0	-5	0	-5	0	0
4	TILT	0	0	0	0	0	0
5	HLIN	220	200	220	205	175	160
6	HWID	0	0	0	0	10	10
7	VKEY	90	90	90	70	80	75
8	VWID	0	0	0	0	0	0
9	VLIN	0	0	0	0	0	0
10	TBPC	0	0	0	0	-20	0
11	SDBW	-30	-30	-30	-30	-30	-30

[Deflection Circuit]

14: Deflection Geometry Height & Width Adjustment

Purpose: To set the height, width and linearity of the raster.

Symptom: Incorrect height, width and/or linearity.

Measuring Instrument	-----
Test Point	-----
Ext. Trigger	------
Measuring Range	-----
Input Signal	Monoscope (NTSC & HD)
Input Terminal	Video & DTV Inputs

Preliminary:

1. DO NOT change the initial values for "#8 VLIN" in the Defl. Jungle Function.
2. DO NOT exceed the following VHGT adjustment ranges:
   NTSC ... from -4 to +10
   HD ... from -10 TO +5

NTSC Mode

1. Supply an NTSC Monoscope signal to a Video Input.
2. Select the Monoscope as the signal source.
3. Activate the Adjustment Mode, JNGL Function.
4. Select and adjust each of the following items.
   - "7 VHGT" ... so the vertical marker sum = 4
   - "1 HWD" ... so the horizontal marker sum = 7
5. Save data and Exit the Service Mode.

HD Mode

1. Supply an HD Monoscope signal to the DTV HD Inputs.
2. Select the DTV Inputs as the signal source (Input button)
3. Activate the Service Mode, Defl. Jungle Function.
4. Select and adjust each of the following items.
   - "7 VHGT" ... so the vertical marker sum = 2
   - "1 HWD" ... so the horizontal marker sum = 5
5. Save data and Exit the Service Mode.

CIRCUIT ADJUST MODE

Activate …….. MENU-0-3-5-7
Function …..……..AUDIO
Item No. …….……VIDEO
Adjust Data ……..ADJUST
Save Data …. ……ENTER
Exit ……..MENU (twice)

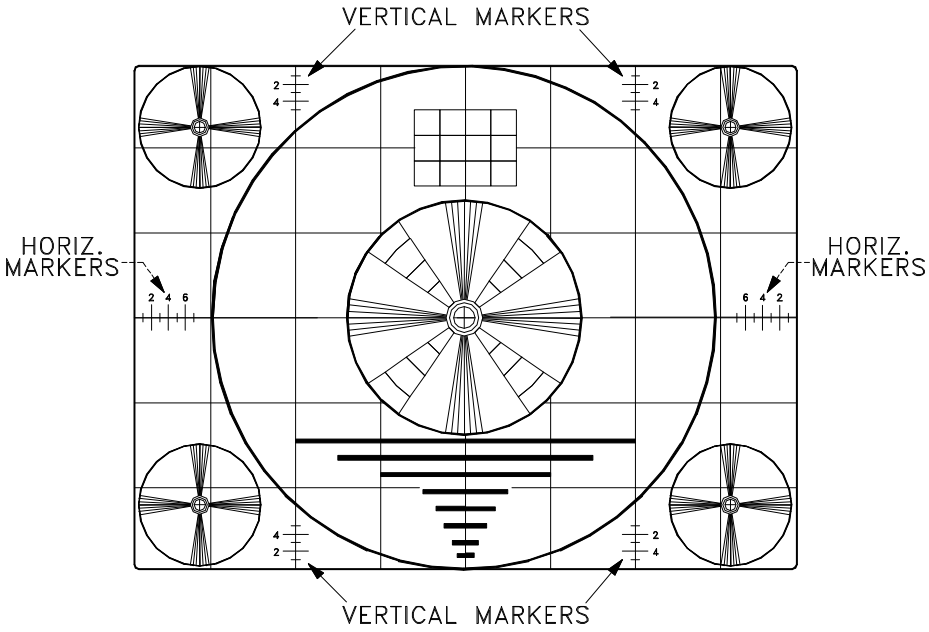

[Convergence Circuit]

15. Convergence Geometry Adjustment

Purpose: To set the Convergence circuit geometry adjustments.

Symptom: Raster distortion at the top, bottom or sides of the picture.

Measuring Instrument	-----
Test Point	------
Ext. Trigger	------
Measuring Range	-----
Input Signal	NTSC -- None HD -- HD sync
Input Terminal	Video & DTV Inputs

Note: *Deflection Circuit Geometry must be performed before this adjustment.*

NTSC mode

1. Select a Video Input with no signal.
2. Activate the Convergence Mode, Coarse Green.
3. Adjust the Coarse Green Items shown below for straight crosshatch lines.
4. Select the Fine Green Mode, a Cursor is displayed on the crosshatch.
5. Use the Cursor to adjust for straight crosshatch lines.
6. Exit the Convergence Mode.

HD mode

1. Supply horizontal and vertical HD sync to the DTV Inputs and select the DTV Inputs as the source.
   Note: I*f an HD signal is not available, use the Conv. HD with No Signal Procedure*
2. Enter the Convergence Mode, Coarse Green.
3. Repeat NTSC Steps 3 through 6 in the HD mode.

CONVERGENCE MODE

Activate ……..MENU-0-3-5-9
Misc. ……..……"6"
Coarse……..…."5"
Fine ……..."4"
Color (R,G or B)……AUDIO
Item No……..VIDEO
Adjust/Move…….ADJUST
Cursor Toggle……..ENTER
Save & Exit…..MENU (twice)

CONV. HD WITH NO SIGNAL

1. MENU-0-3-7-0
2. Set DTV Port to 1080i
3. MENU (Twice)
4. INPUT select DTV inputs
5. MENU-0-3-5-9

After Adjusting, set the DTV Port to AUTO

COARSE GREEN ADJUSTMENTS

3 SKEW

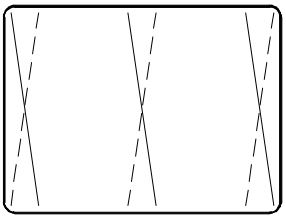

4 TILT

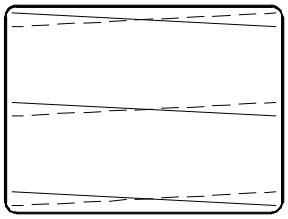

6 HLIN

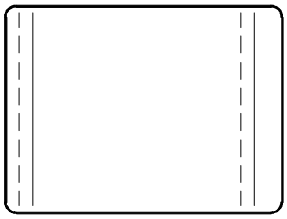

7 SPCC

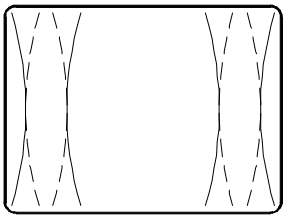

8 HKEY

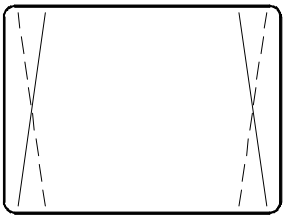

9 TBPC

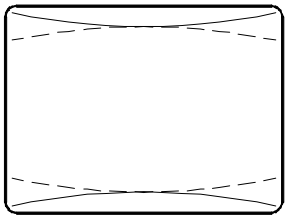

10 VKEY

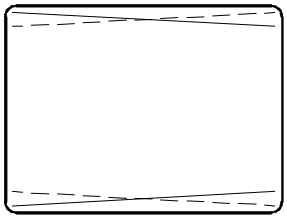

12 VLIN

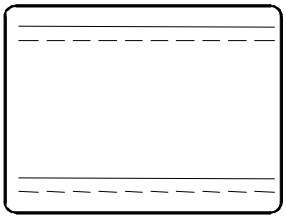

[Convergence Circuit]

16. Centering and Static Convergence

Purpose: To converge red, green and blue at the center of the screen

Symptom: Color edging over the entire picture.

Measuring Instrument	-----
Test Point	-----
Ext. Trigger	------
Measuring Range	-----
Input Signal	NTSC -- Monoscope HD -- Monoscope
Input Terminal	Video & DTV Inputs

Preliminary

Degauss the shield cover and bracket unit of the CRT assembly and chassis.
DO NOT degauss the Centering and Alignment Magnet Assemblies.

CAUTION: On models WS-48315, WS-55315 and WS-65315, **Do Not** adjust the Alignment Magnets instead of the Centering Magnets.

HD mode

1. Supply an HD Monoscope signal to the DTV Inputs.
2. Select the DTV Inputs as the signal source (Input button).
3. Enter the Convergence Coarse mode.
4. Set the data for the "HSTA" and "VSTA" items to:

GREEN	RED	BLUE
HSTA = 0	HSTA = 50	HSTA = -50
VSTA = 0	VSTA = 0	VSTA = 0

5. In the Coarse Green mode:
   - Center the Green Raster using the Green Centering Magnet.
   - Rotate the Green Deflection Yoke to correct any tilt.
6. In the Coarse Red mode, use the Red Centering Magnet to converge red on the green at the center of screen. Correct any red tilt with the Red Deflection Yoke.
7. In the Coarse Blue mode, repeat Step 6 using the Blue Centering magnet and the Blue Deflection Yoke.
8. Exit the Convergence mode.

CONVERGENCE MODE

Activate ……..MENU-0-3-5-9
Misc. ……"6"
Coarse……"5"
Fine ……..."4"
Color (R,G or B)……AUDIO
Item No……..VIDEO
Adjust/Move…….ADJUST
Cursor Toggle……..ENTER
Save & Exit…..MENU (twice)

SD mode

1. Supply an NTSC Monoscope signal to a Video Input.
2. Select the Monoscope as the signal source (Input button).
3. Enter the Convergence Coarse Green mode.
4. If needed, center the green raster using "1 HSTA" and "2 VSTA" adjustments.
5. In the Coarse Red mode, use "1 HSTA" and "2 VSTA" adjustments to converge the red on the green at the center of the screen.
6. In the Coarse Blue mode, repeat step 5 to converge the blue on the green.
7. Exit the Convergence Mode

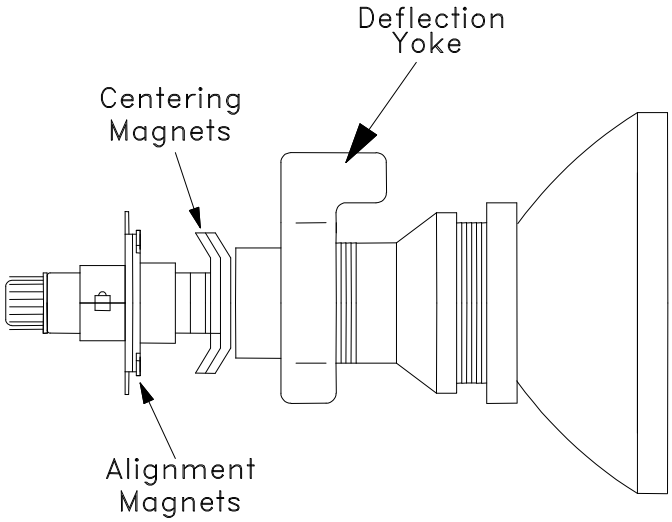

[Convergence Circuit]

17. Coarse Convergence

Purpose: To converge red and blue on green at the edges of the screen.

Symptom: Color edging at the top, bottom and sides of the screen.

Measuring Instrument	-----
Test Point	------
Ext. Trigger	------
Measuring Range	-----
Input Signal	NTSC -- None HD -- HD sync
Input Terminal	Video & HD Inputs

SD mode

1. Select an External Input with no signal.
2. Activate the Convergence Mode, Coarse Red.
3. Adjust the Items shown below to converge the red on the green.
4. Select Coarse Blue mode.
5. Adjust the Items shown below to converge the blue on the green.
   Note: *If center convergence shifts, use red and blue Items "0 HSTA" and "1 VSTA" to correct the shift.*
6. Exit the Convergence Mode.

HD mode

1. Supply horizontal and vertical HD sync to the DTV Inputs and select the DTV Inputs as the source.
   Note: I*f an HD signal is not available, use the Conv. HD with No Signal Procedure.*
2. Repeat SD Steps 2 through 5 in the HD mode.
3. Exit the Convergence mode.

CONVERGENCE MODE

Activate ……..MENU-0-3-5-9
Misc. …….……"6"
Coarse……..…"5"
Fine ……..."4"
Color (R,G or B)……AUDIO
Item No……..VIDEO
Adjust/Move…….ADJUST
Cursor Toggle……..ENTER
Save & Exit…..MENU (twice)

CONV. HD WITH NO SIGNAL

1. MENU-0-3-7-0
2. Set DTV Port to 1080i
3. MENU (Twice)
4. INPUT select DTV inputs
5. MENU-0-3-5-9

After Adjusting, set the DTV Port to AUTO

COARSE CONVERGENC RED & BLUE ADJUSTMENTS

1 HSTA*

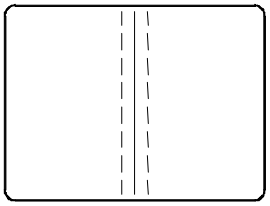

2 VSTA*

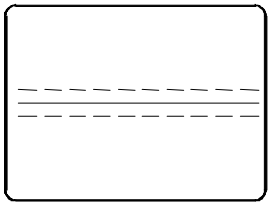

3 SKEW

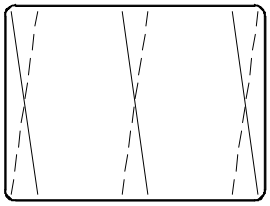

4 TILT

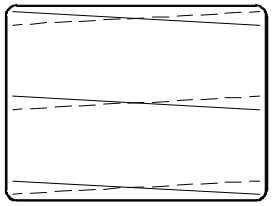

5 HLIN

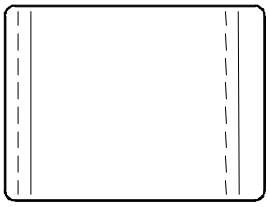

6 HWID

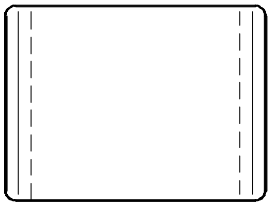

7 VKEY

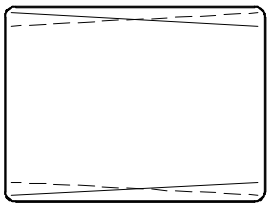

8 VWID

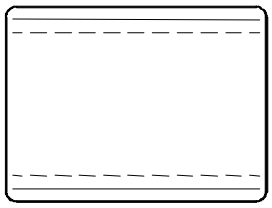

9 VLIN

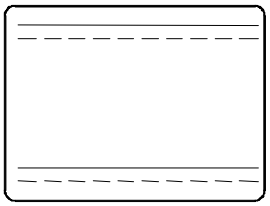

10 TBPC

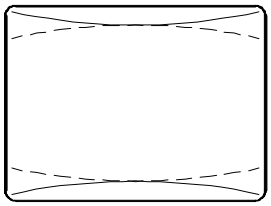

11 HSBW

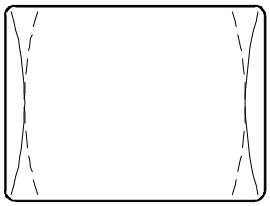

* Data should not exceed ±100

[Convergence Circuit]

18. Fine Convergence

Purpose: To converge red, green and blue at the edges of the screen

Symptom: Color edging at the edges of the picture.

Measuring Instrument	-----
Test Point	-----
Ext. Trigger	------
Measuring Range	-----
Input Signal	NTSC -- None HD -- HD sync
Input Terminal	Video & DTV Inputs

SD Fine Adjustment

1. Select an External Input, no signal.
2. Activate the Convergence Mode, Fine Red.
3. Use the Cursor to converge red on the green.
4. Select the Fine Blue mode.
5. Use the Cursor to converge blue on the green.
6. Exit the Convergence mode.

HD Fine Adjustment

1. Supply an HD signal (sync only) to the DTV inputs and select DTV with the "Audio" button.
   Note: I*f an HD signal is not available, use the Conv. HD with No Signal Procedure.*
2. Repeat SD Fine Adjustment Steps 2 through 6, in the HD mode.

CONVERGENCE MODE

Activate ……..MENU-0-3-5-9
Misc. ……..……"6"
Coarse……..…."5"
Fine ……..."4"
Color (R,G or B)……AUDIO
Item No……..…..VIDEO
Adjust/Move…….ADJUST
Cursor Toggle……..ENTER
Save & Exit…..MENU (twice)

CONV. HD WITH NO SIGNAL

1. MENU-0-3-7-0
2. Set DTV Port to 1080i
3. MENU (Twice)
4. INPUT select DTV inputs
5. MENU-0-3-5-9

After Adjusting, set the DTV Port to AUTO

[MonitorLink]

19. MonitorLink Picture Position

Purpose: To position MonitorLink source picture on the screen.

Symptom: MonitorLink picture not centered on the screen.

Measuring Instrument	
Test Point	
Ext. Trigger	
Measuring Range	
Input Signal	MonitorLink Source
Input Terminal	MLINK

1. Apply a MonitorLink source to the MLink input.
2. Select MLINK input as the signal source.
3. Enter the Service Adjust Mode.
4. Select the MISCDEV Function.
5. Use Items #474 and #475 to center the MLink picture on the screen.
6. Press ENTER and exit the Adjustment Mode.

CIRCUIT ADJUST MODE

Activate …….. MENU-0-3-5-7
Function …...……..AUDIO
Item No. ……..……VIDEO
Adjust Data ……..ADJUST
Save Data …. ……ENTER
Exit ……..MENU (twice)

CHIP PARTS REPLACEMENT

Some resistors, shorting jumpers (0 Ohm resistors), ceramic capacitors, transistors and diodes are chip parts. The following precautions should be taken when replacing these parts.

Cautions:

1. Use a fine tipped, well insulated soldering iron (approximately 30 watts), and tweezers.
2. Melt the solder and remove the chip parts carefully so as not to tear the copper foil from the printed circuit board.
3. Discard removed chips; do not reuse them.
4. Do not apply heat for more than 3 (three) seconds to new chip parts.
5. Avoid using a rubbing stroke when soldering.
6. Take care not to scratch, or damage the chip parts when soldering.
7. Supplementary cementing is not required.

Chip Parts Removal (Resistors, Capacitors, etc.)

1. Grasp the part with tweezers. Melt the solder at both sides alternately, and remove one side of the part with a twisting motion.
2. Melt the solder at the other side and remove the part.

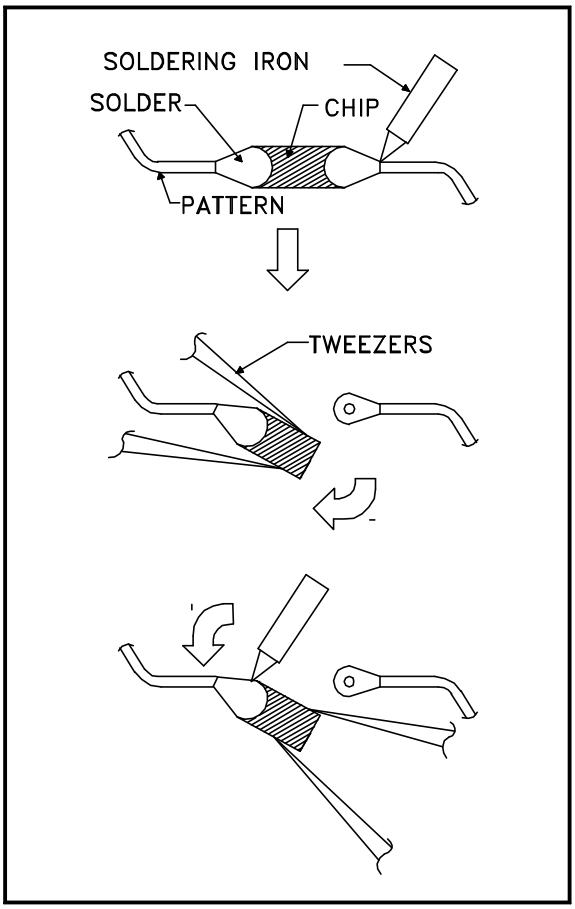

Chip Parts Removal (Transistors)

1. Melt the solder of one lead and lift the side of that lead upward.
2. Simultaneously melt the solder of the other two leads and lift the part from the PCB.

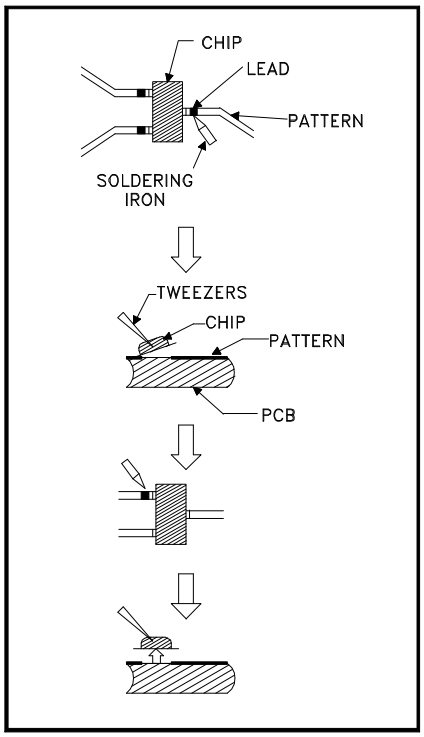

Replacement

1. Presolder the contact points on the circuit pattern.
2. Press the part downward with tweezers and apply the soldering iron as shown.

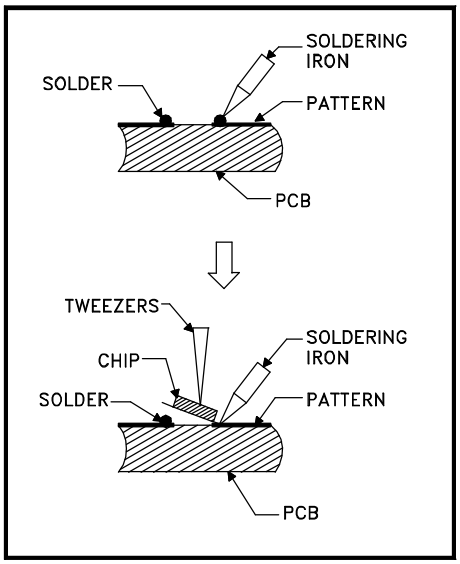

REPLACEMENT PARTS

Parts Ordering
To expedite delivery of replacement parts orders, specify the following:
1. Model Number/Serial Number
2. Part Number and description
3. Quantity

Note: Unless complete information is supplied, delay in processing of orders will result.

Critical and Warranty Parts Designation

Critical Electrical Components are indicated by **Bold Type** in the Parts List, and in the schematic diagrams by shading.

Warranty Return Parts are indicated in the Parts List with an **(*)**.

Parts Tolerance Codes
Refer to the following chart for tolerance characteristics of electrical components.

MARK	B	C	D	F	G	J	K
Tolerance %	± 0.1	± 0.25	± 0.5	± 1	± 2	± 5	± 10

MARK	M	N	V	X	Z	P	Q
Tolerance %	± 20	± 30	± 10	+ 40 -20	+ 80 -20	+ 100 - 0	+ 30 -10

MARK	M	N	V	X	Z
Tolerance (pF)	± 0.1	± 0.25	± 0.5	± 1	± 2

QUICK REFERENCE FOR COMMON REPLACEMENT PARTS

CRT ASSEMBLIES

CRT-ASSY	WS-48315	WS-55315	WS-65315
ASSY-CRT-RED	251C223040	251C223010	251C222040
ASSY-CRT-GREEN	251C223050	251C223020	251C222050
ASSY-CRT-BLUE	251C223060	251C223030	251C222060

PRINTED CIRCUIT BOARDS

PCB	WS-48315	WS-55315	WS-65315
MAIN	930B899004	930B899004	930B899005
POWER	930B900002	930B900002	930B900002
SIGNAL	930B901003-48	930B901003-55	930B901003-65
TERMINAL	930B902001	930B902001	930B902001
CRT	934C062001	934C062001	934C062001
DOUBLER	934C063003	934C063003	934C063003
PREAMP	935D738001	935D738001	935D738001
FRONT	935D739001	935D739001	935D739001
CONTROL	935D740001	935D740001	935D740001

REMOTE CONTROL

290P116010	Remote Control	

HIGH VOLTAGE / DEFLECTION COMPONENTS

Q5A51	261P082010	HV-OUT 2SK2771-O1R	
T5A51	334P281010	TRANS-FLYBACK	
	330P293010	DEFL-YOKE	WS-65315
	330P293020	DEFL-YOKE	WS-48315 / WS-55315
	453B036010	CAP-ANODE-SHORT [R]	
	453B036020	CAP-ANODE-LONG [GB]	

MISCELLANEOUS

MODEL	MIRROR	LENTICULAR SCREEN	FRESNEL LENS
WS-48315	767D072040	491P138020	491P139020
WS-55315	767D072050	491P103030	491P104030
WS-65315	767D048090	491P105050	491P106080

Model Legend: (a) WS-48315, (b) WS-55315, (c) WS-65315

Ref #	Part #	Part Name & Description	[#]
		TUBES	
	251C222040	**ASSY-CRT-RED**	**c**
	251C222050	**ASSY-CRT-GREEN**	**c**
	251C222060	**ASSY-CRT-BLUE**	**c**
	251C223040	**ASSY-CRT-RED**	**a**
	251C223050	**ASSY-CRT-GREEN**	**a**
	251C223060	**ASSY-CRT-BLUE**	**a**
	251C223010	**ASSY-CRT-RED**	**b**
	251C223020	**ASSY-CRT-GREEN**	**b**
	251C223030	**ASSY-CRT-BLUE**	**b**
		INTEGRATED CIRCUITS	
IC2C00	275P989010	IC-C-MOS - MAX3223ECAP	
IC2D00	270P974010	IC-C-MOS - SII907B	
IC2D02	261P135010	FET-HEX - IRF7313	
IC2D04	271P004010	IC - CM1208-08MS	
IC2K01	270P623010	IC - CXA2069Q	
IC2K02	275P533010	IC-C-MOS - M24C64WM6T	
IC2K04	275P718010	IC-C-MOS - TC74HC4053FT	
IC2K05	275P718010	IC-C-MOS - TC74HC4053FT	
IC2L01	275P937010	IC-C-MOS - MM1519XQ	
IC2M01	275P947010	IC-C-MOS - UPD64083	
IC2M02	270P992020	IC - BA25BC0FP	
IC2MD1	272P379020	IC - LM1881MX (NSC)	
IC2N01	275P938010	IC-C-MOS - TA1340F	
IC2P01	275P938010	IC-C-MOS - TA1340F	
IC2R01	271P005020	IC - AN15851AN	
IC2V00	275P733010	IC-C-MOS - CXA2150AQ	
IC3A01	275P731020	IC-C-MOS - MSP3445G-QI-B8-V3	
IC3E01	**270P750010**	**IC - LA4663**	
IC3J01	270P838010	IC-C-MOS - NJM2520M	
IC3J02	270P838010	IC-C-MOS - NJM2520M	
IC3J03	270P838010	IC-C-MOS - NJM2520M	
IC3J04	270P838010	IC-C-MOS - NJM2520M	
IC4B01	**270P261020**	**IC - TDA8177**	
IC5A00	267P163010	HIC - MSPAD401	
IC5A01	272P237010	IC - LA6324N	
IC5A02	266P727040	IC - UPC339C/LM339N	
IC5A03	270P704010	IC - LM4040BIZ-10.0	
IC6B01	270P667010	IC - TDA6120Q	
IC6G01	270P667010	IC - TDA6120Q	
IC6R01	270P667010	IC - TDA6120Q	
IC7A00	275P942040	IC-C-MOS - M306V3MG-808FP	
IC7AAA	275P981010	IC-C-MOS - 24LCS22AT/SN	
IC7B01	270P706020	IC - MAX823REUK	
IC7C01	275P533010	IC-C-MOS - M24C64WM6T	
IC7D01	275P278010	IC-C-MOS - TC74LVX14FT	
IC7D02	270P818020	IC - CXA3506R	
IC7D03	267P172010	HIC - AF-9395A	
IC7E00	275P451010	IC-C-MOS - TC74HC4066AFN	
IC7E01	275P560010	IC-C-MOS - ADS931E	
IC7E02	275P560010	IC-C-MOS - ADS931E	
IC7E03	275P560010	IC-C-MOS - ADS931E	
IC7H00	275P963010	IC-C-MOS - DPM5	
IC7H07	270P992010	IC - BA18BC0FP	
IC7M00	275P982010	IC - MT48LC2M32B2-7	
IC7N01	270P348010	IC - TLC2932IPW	
IC7N11	275P236020	IC-C-MOS - TC74LVX244FT	
IC7N21	275P769010	IC-C-MOS - TC74AC157FT	
IC7N31	275P769010	IC-C-MOS - TC74AC157FT	
IC7N41	274P901010	IC-C-MOS - TC74HCT7007AF	
IC7N61	274P901010	IC-C-MOS - TC74HCT7007AF	
IC8C01	**267P173010**	**HIC - STK394-250**	
IC8C02	267P173010	HIC - STK394-250	
IC8D00	275P595010	IC-C-MOS - CM0022AF	
IC8D01	275P222020	IC-C-MOS - M24C32MN6T	
IC8E00	270P751010	IC - TL084CD	
IC8E01	270P751010	IC - TL084CD	
IC8E02	270P751010	IC - TL084CD	
IC8E03	275P721010	IC-C-MOS - CD0031AM	
IC9A20	**267P164010**	**HIC - TNY264P**	
IC9A21	270P816010	IC - NJM431L	
IC9A50	**267P161010**	**HIC - STR-F6428S**	
IC9AAA	270P677010	IC - BA033FP	
IC9B02	**270P668020**	**IC - SI-8050S**	
IC9C01	270P928010	IC - BA17809FP	
IC9C11	270P928010	IC - BA17809FP	
IC9C21	270P677010	IC - BA033FP	
IC9C31	270P999010	IC - NJM2370R09	
IC9C41	270P677010	IC - BA033FP	
IC9C51	270P990010	IC - SI-8120JD	
IC9C61	270P677010	IC - BA033FP	

TRANSISTORS

CHIP Type Transistors (Listed by Part No.)

Part No.	Description
260P817050	2SA1037K-R,S/2SB709AI-R,S
260P817080	2SA1037K-R,S
260P818050	2SC2412K-R,S/2SD601AI-R,S
260P835030	2SC2413K-Q
261P066040	2SA1037AK-Q
261P801010	2SA1252-5,6

TRANSISTORS

Conventional Transistors (By Ref #)

Ref #	Part #	Part Name & Description	[#]
Q2V30	260C004020	TR - 2SC1740S-R,S/2SC3311A-R,S	
Q4B01	260C004020	TR - 2SC1740S-R,S/2SC3311A-R,S	
Q5A01	**261P126010**	**TR - 2SD2052**	
Q5A02	260P561020	TR - 2SA1371-E	
Q5A03	260P386010	TR - 2SC2230-GR	
Q5A04	260C004010	TR - 2SC1740S-R,S/2SC3311A-R,S	
Q5A05	260C004050	TR - 2SA933S-R,S/2SA1309A-R,S	
Q5A06	260C004050	TR - 2SA933S-R,S/2SA1309A-R,S	
Q5A07	**260C004010**	**TR - 2SC1740S-R,S/2SC3311A-R,S**	
Q5A07	260C416030	TR - 2SC2274-F/2SC2274K-F	
Q5A08	260C004010	TR - 2SC1740S-R,S/2SC3311A-R,S	
Q5A09	**260C004010**	**TR - 2SC1740S-R,S/2SC3311A-R,S**	
Q5A09	260C255040	TR - 2SA950-Y	
Q5A10	260C004050	TR - 2SA933S-R,S/2SA1309A-R,S	
Q5A20	**260C004050**	**TR - 2SA933S-R,S/2SA1309A-R,S**	
Q5A31	261P122010	TR - 2SC5778	
Q5A32	261P127010	TR - 2SK2774-01	
Q5A33	260C004010	TR - 2SC1740S-R,S/2SC3311A-R,S	
Q5A34	260P561020	TR - 2SA1371-E	
Q5A35	260P386010	TR - 2SC2230-GR	
Q5A36	260P630010	TR - 2SD2012	

Model Legend: (a) WS-48315, (b) WS-55315, (c) WS-65315

Ref #	Part #	Part Name & Description	[#]
Q5A37	260C004010	TR - 2SC1740S-R,S/2SC3311A-R,S	
Q5A38	260C004010	TR - 2SC1740S-R,S/2SC3311A-R,S	
Q5A39	260C004050	TR - 2SA933S-R,S/2SA1309A-R,S	
Q5A40	260C004050	TR - 2SA933S-R,S/2SA1309A-R,S	
Q5A51	261P082010	TR - 2SK2771-01R	
Q5H01	260C001040	TR - 2SC2603-G/2SC1740S-E	
Q5H03	260C001040	TR - 2SC2603-G/2SC1740S-E	
Q5H04	260C001040	TR - 2SC2603-G/2SC1740S-E	
Q5H05	260C001040	TR - 2SC2603-G/2SC1740S-E	
Q5H06	260C001060	TR - 2SA1115-F/2SA933S-S	
Q5H09	260C001030	TR - 2SC2603-F,G/2SC1740S	
Q5H10	260C001060	TR - 2SA1115-F/2SA933S-S	
Q5H11	**260P644040**	**TR - 2SA1535-R**	
Q5H12	260P647040	TR - 2SC3944-R	
Q5H13	260C001060	TR - 2SA1115-F/2SA933S-S	
Q5K00	260P664030	TR - 2SC4636	
Q5K01	260P664030	TR - 2SC4636	
Q5K02	260C004020	TR - 2SC1740S-R,S/2SC3311A-R,S	
Q5K03	260C004050	TR - 2SA933S-R,S/2SA1309A-R,S	
Q5K50	261P214010	TR - 2SC4634LS	
Q6B01	260C001010	TR - 2SC2603-E,F	
Q6B02	260C001050	TR - 2SA1115-E,F/2SA933S	
Q6B03	260C001050	TR - 2SA1115-E,F/2SA933S	
Q6G01	260C001010	TR - 2SC2603-E,F	
Q6R01	260C001010	TR - 2SC2603-E,F	
Q9A51	**260C004010**	**TR - 2SC1740S-R,S/2SC3311A-R,S**	
Q9A52	260C004010	TR - 2SC1740S-R,S/2SC3311A-R,S	
Q9A54	260C004010	TR - 2SC1740S-R,S/2SC3311A-R,S	
Q9A55	260C004010	TR - 2SC1740S-R,S/2SC3311A-R,S	
Q9B01	260C004010	TR - 2SC1740S-R,S/2SC3311A-R,S	
		DIODES	
D2W01	264P828010	D-CHIP - DAN202U/MA142WK	
D2W02	264P828010	D-CHIP - DAN202U/MA142WK	
D2W03	264P828010	D-CHIP - DAN202U/MA142WK	
D2W04	264P828010	D-CHIP - DAN202U/MA142WK	
D4B01	264D056020	DIODE - S5500D/EM1Z/ERB12-02RK	
D4B04	264P045080	DIODE - 1S2076A/1S2471OM	
D5A01	264P045080	DIODE - 1S2076A/1S2471OM	
D5A02	264D056020	DIODE - S5500D/EM1Z/ERB12-02RK	
D5A03	264P045080	DIODE - 1S2076A/1S2471OM	
D5A12	264P045080	DIODE - 1S2076A/1S2471OM	
D5A13	264P045080	DIODE - 1S2076A/1S2471OM	
D5A14	264P045080	DIODE - 1S2076A/1S2471OM	
D5A33	262P086010	DIODE - 31DF2-FC5	
D5A34	264P460060	DIODE - EQA02-05C/RD5.1EB1	
D5A35	264P045080	DIODE - 1S2076A/1S2471OM	
D5A36	264P045080	DIODE - 1S2076A/1S2471OM	
D5A37	264P521010	DIODE - EU 1Z	
D5A51	**262P039010**	**DIODE - BYW96E/20**	
D5A52	264P899010	DIODE - BYV26E	
D5A53	264P466040	DIODE - EQA02-15AB/RD16EB1	
D5A54	**262P085010**	**DIODE - 11EFS2N-TA2B5**	
D5A55	262P085010	DIODE - 11EFS2N-TA2B5	
D5A56	264P045080	DIODE - 1S2076A/1S2471OM	
D5A57	264P521010	DIODE - EU 1Z	
D5A58	264P045080	DIODE - 1S2076A/1S2471OM	
D5A60	**264P465060**	**DIODE - EQA02-12B/RD13EB2**	
D5H01	264P045080	DIODE - 1S2076A/1S2471OM	

Ref #	Part #	Part Name & Description	[#]
D5H02	264P045080	DIODE - 1S2076A/1S2471OM	
D5K01	264P528030	DIODE - RP 1H	
D5K02	264P543010	DIODE - EG01	
D5K03	264P543010	DIODE - EG01	
D5K10	264P528030	DIODE - RP 1H	
D5K11	264P528030	DIODE - RP 1H	
D5K12	262P085010	DIODE - 11EFS2N-TA2B5	
D6B00	262P063010	DIODE - 1SS244	
D6B07	262P063010	DIODE - 1SS244	
D6B08	262P063010	DIODE - 1SS244	
D6G00	262P063010	DIODE - 1SS244	
D6G07	262P063010	DIODE - 1SS244	
D6G08	262P063010	DIODE - 1SS244	
D6R00	262P063010	DIODE - 1SS244	
D6R07	262P063010	DIODE - 1SS244	
D6R08	262P063010	DIODE - 1SS244	
D7AAA	262P805050	D-CHIP - UDZS5.1B	
D7L21	264P212020	D-LED - LN31GPH	
D8C03	264P486060	DIODE - RD9.1FB3	
D8C04	264P486060	DIODE - RD9.1FB3	
D9A01	**262P031010**	**DIODE - D6SB80**	
D9A22	264P825040	DIODE - ERA15-08	
D9A24	264P045080	DIODE - 1S2076A/1S2471OM	
D9A28	264P045080	DIODE - 1S2076A/1S2471OM	
D9A29	264P461050	DIODE - EQA02-06B/RD5.6EB3	
D9A30	262P097010	DIODE - 11EQS06N-TA2B5	
D9A31	262P097010	DIODE - 11EQS06N-TA2B5	
D9A53	264P045080	DIODE - 1S2076A/1S2471OM	
D9A54	262P085010	DIODE - 11EFS2N-TA2B5	
D9A55	264P045080	DIODE - 1S2076A/1S2471OM	
D9A56	262P083010	DIODE - FSF05A20	
D9A57	264P899010	DIODE - BYV26E	
D9A58	262P088010	DIODE - 31DF4-FC5	
D9A60	262P083010	DIODE - FSF05A20	
D9A61	262P086010	DIODE - 31DF2-FC5	
D9A65	264P045080	DIODE - 1S2076A/1S2471OM	
D9A66	264P045080	DIODE - 1S2076A/1S2471OM	
D9A67	264P461050	DIODE - EQA02-06B/RD5.6EB3	
D9A68	264P469070	DIODE - EQA02-28A/RD27EB4	
D9A69	264P527020	DIODE - AK04	
D9B01	264P045080	DIODE - 1S2076A/1S2471OM	
D9B02	264P045080	DIODE - 1S2076A/1S2471OM	
D9B05	262P084010	DIODE - 31DQ06	
D9B07	264P484030	DIODE - RD5.6FB2	
D9C51	262P087010	D-CHIP - EC21QS04-TE12L	
		COILS	
L1A30	321C114010	COIL-RF - 2200MH-J	
L1A31	325C461030	COIL-PEAKING - 10MH-K	
L1B30	321C114010	COIL-RF - 2200MH-J	
L1B31	325C461030	COIL-PEAKING - 10MH-K	
L2AGA	409P864010	EMI-F-CHIP - ACB2012M600/BLM21A601S	
L2AJA	409P864010	EMI-F-CHIP - ACB2012M600/BLM21A601S	
L2AKA	409P864010	EMI-F-CHIP - ACB2012M600/BLM21A601S	
L2ANA	409P864010	EMI-F-CHIP - ACB2012M600/BLM21A601S	
L2APA	409P864010	EMI-F-CHIP - ACB2012M600/BLM21A601S	
L2ARA	409P864010	EMI-F-CHIP - ACB2012M600/BLM21A601S	
L2ATA	409P864010	EMI-F-CHIP - ACB2012M600/BLM21A601S	
L2AYA	409P864010	EMI-F-CHIP - ACB2012M600/BLM21A601S	

Model Legend: (a) WS-48315, (b) WS-55315, (c) WS-65315

Ref #	Part #	Part Name & Description	[#]
L2AZA	409P864010	EMI-F-CHIP - ACB2012M600/BLM21A601S	
L2K05	409P777080	EMI-F-CHIP - BLM21P221S	
L2K42	325C461030	COIL-PEAKING - 10MH-K	
L2K46	325C462080	COIL-PEAKING - 180MH-J	
L2K55	325C462080	COIL-PEAKING - 180MH-J	
L2L28	325C461030	COIL-PEAKING - 10MH-K	
L2M22	325C461050	COIL-PEAKING - 15MH-K	
L2M31	409P777080	EMI-F-CHIP - BLM21P221S	
L2M32	325C461050	COIL-PEAKING - 15MH-K	
L2M38	409P777080	EMI-F-CHIP - BLM21P221S	
L2M45	409P777080	EMI-F-CHIP - BLM21P221S	
L2M46	409P777080	EMI-F-CHIP - BLM21P221S	
L2M50	325C461000	COIL-PEAKING - 5.6MH-K	
L2M53	325C461030	COIL-PEAKING - 10MH-K	
L2M81	409P777080	EMI-F-CHIP - BLM21P221S	
L2MA0	325C461050	COIL-PEAKING - 15MH-K	
L2MA1	325C461030	COIL-PEAKING - 10MH-K	
L2MD1	325C461030	COIL-PEAKING - 10MH-K	
L2N01	325C461030	COIL-PEAKING - 10MH-K	
L2N25	325C462020	COIL-PEAKING - 56MH-K	
L2NA1	325C461030	COIL-PEAKING - 10MH-K	
L2NA2	325C461080	COIL-PEAKING - 27MH-K	
L2NA3	325C461030	COIL-PEAKING - 10MH-K	
L2NC0	325C461030	COIL-PEAKING - 10MH-K	
L2NC1	325C461080	COIL-PEAKING - 27MH-K	
L2P01	325C461030	COIL-PEAKING - 10MH-K	
L2P22	325C461050	COIL-PEAKING - 15MH-K	
L2P25	325C462020	COIL-PEAKING - 56MH-K	
L2P31	325C462020	COIL-PEAKING - 56MH-K	
L2P32	325C461050	COIL-PEAKING - 15MH-K	
L2P41	325C462020	COIL-PEAKING - 56MH-K	
L2R28	325C461030	COIL-PEAKING - 10MH-K	
L2V19	325C461010	COIL-PEAKING - 6.8MH-K	
L2V55	325C461010	COIL-PEAKING - 6.8MH-K	
L2V61	325C461010	COIL-PEAKING - 6.8MH-K	
L2W02	409P923060	EMI-F-CHIP - BLM21B272S	
L2W03	409P923060	EMI-F-CHIP - BLM21B272S	
L2W04	409P923060	EMI-F-CHIP - BLM21B272S	
L3A10	409P923060	EMI-F-CHIP - BLM21B272S	
L3A49	409P923060	EMI-F-CHIP - BLM21B272S	
L3J01	325C461030	COIL-PEAKING - 10MH-K	
L3J20	325C461030	COIL-PEAKING - 10MH-K	
L3J40	409P777020	EMI-F-CHIP - BLM21A05	
L4B01	321C130010	COIL-RF - 2MH	
L4B02	321C130090	COIL-RF - 10MH-K	
L5A22	333P059020	COIL-HORIZ-LIN	
L5A34	321C130010	COIL-RF - 2MH	
L5A51	321C151040	COIL-RF - 12MH-K	
L5A54	411D009020	CORE-FERRITE	
L7A16	409P777050	EMI-F-CHIP - BLM21B201S	
L7A19	409P777050	EMI-F-CHIP - BLM21B201S	
L7A88	409P777050	EMI-F-CHIP - BLM21B201S	
L7A90	409P777050	EMI-F-CHIP - BLM21B201S	
L7A91	409P777050	EMI-F-CHIP - BLM21B201S	
L7A99	409P777050	EMI-F-CHIP - BLM21B201S	
L7ACC	409P777080	EMI-F-CHIP - BLM21P221S	
L7CA3	325C146090	COIL-CHIP - 33MH-J	
L7D30	325C241030	COIL-CHIP - 10MH-K	
L7D31	325C241030	COIL-CHIP - 10MH-K	
L7D41	325C241030	COIL-CHIP - 10MH-K	

Ref #	Part #	Part Name & Description	[#]
L7D42	409P777080	EMI-F-CHIP - BLM21P221S	
L7D90	409P777080	EMI-F-CHIP - BLM21P221S	
L7E00	409P777080	EMI-F-CHIP - BLM21P221S	
L7E11	325C241030	COIL-CHIP - 10MH-K	
L7E12	409P777080	EMI-F-CHIP - BLM21P221S	
L7E13	325C241030	COIL-CHIP - 10MH-K	
L7E14	409P777080	EMI-F-CHIP - BLM21P221S	
L7E15	325C241030	COIL-CHIP - 10MH-K	
L7G51	325C241030	COIL-CHIP - 10MH-K	
L7G66	325C241030	COIL-CHIP - 10MH-K	
L7G81	325C241030	COIL-CHIP - 10MH-K	
L7H01	409P777080	EMI-F-CHIP - BLM21P221S	
L7H04	409P777080	EMI-F-CHIP - BLM21P221S	
L7H29	409P777080	EMI-F-CHIP - BLM21P221S	
L7H49	409P777080	EMI-F-CHIP - BLM21P221S	
L7H73	409P777080	EMI-F-CHIP - BLM21P221S	
L7H76	409P777080	EMI-F-CHIP - BLM21P221S	
L7J13	409P777080	EMI-F-CHIP - BLM21P221S	
L7J23	325C241030	COIL-CHIP - 10MH-K	
L7J38	409P777080	EMI-F-CHIP - BLM21P221S	
L7J44	409P777080	EMI-F-CHIP - BLM21P221S	
L7K01	325C121030	COIL-PEAKING - 10MH-K	
L7M90	409P777080	EMI-F-CHIP - BLM21P221S	
L7N01	325C241030	COIL-CHIP - 10MH-K	
L7N02	409P777080	EMI-F-CHIP - BLM21P221S	
L7N11	409P777080	EMI-F-CHIP - BLM21P221S	
L7N21	409P777080	EMI-F-CHIP - BLM21P221S	
L7N31	409P777080	EMI-F-CHIP - BLM21P221S	
L7N41	409P777080	EMI-F-CHIP - BLM21P221S	
L7N61	409P777080	EMI-F-CHIP - BLM21P221S	
L7P01	409P777050	EMI-F-CHIP - BLM21B201S	
L7RF1	409P777050	EMI-F-CHIP - BLM21B201S	
L8C01	321C141070	COIL-RF - 22MH-K	
L8C02	321C141070	COIL-RF - 22MH-K	
L8D01	409P777080	EMI-F-CHIP - BLM21P221S	
L8D02	409P777080	EMI-F-CHIP - BLM21P221S	
L8D03	409P777080	EMI-F-CHIP - BLM21P221S	246
L8D04	409P777080	EMI-F-CHIP - BLM21P221S	
L8D05	325C461030	COIL-PEAKING - 10MH-K	
L8D06	409P777080	EMI-F-CHIP - BLM21P221S	
L8D07	409P777080	EMI-F-CHIP - BLM21P221S	
L8D08	325C461030	COIL-PEAKING - 10MH-K	
L8G00	409P777080	EMI-F-CHIP - BLM21P221S	
L8G01	409P777080	EMI-F-CHIP - BLM21P221S	
L9A20	321C141070	COIL-RF - 22MH-K	
L9A21	321C141070	COIL-RF - 22MH-K	
L9A50	411D009020	CORE-FERRITE	
L9A52	411D009020	CORE-FERRITE	
L9A53	321C141010	COIL-RF - 6.8MH-M	
L9A54	411D009020	CORE-FERRITE	
L9A55	321C142030	COIL-RF - 68MH-K	
L9A56	411D009020	CORE-FERRITE	
L9A57	321C141070	COIL-RF - 22MH-K	
L9A62	321C141010	COIL-RF - 6.8MH-M	
L9A63	321C141010	COIL-RF - 6.8MH-M	
L9A64	321C141010	COIL-RF - 6.8MH-M	
L9AAA	325C462020	COIL-PEAKING - 56MH-K	
L9B03	321C141070	COIL-RF - 22MH-K	
L9B04	**351P247010**	**COIL-CHOKE - 150UH**	
L9B05	321C141030	COIL-RF - 10MH-K	

Model Legend: (a) WS-48315, (b) WS-55315, (c) WS-65315

Ref #	Part #	Part Name & Description	[#]
L9C51	321C141070	COIL-RF - 22MH-K	
L9C52	351P244010	COIL-CHOKE - CD-C-1010-101	
L9C53	321C141070	COIL-RF - 22MH-K	
L9D00	**351P243010**	**FILTER-LINE - CD-N-2637F-152**	
L9D01	**351P243010**	**FILTER-LINE - CD-N-2637F-152**	
L9D02	**351P223010**	**FILTER-LINE - SLF15N0601**	
LC2J40	409P777020	EMI-F-CHIP - BLM21A05	
LC2J41	409P777020	EMI-F-CHIP - BLM21A05	
LC2J42	409P777020	EMI-F-CHIP - BLM21A05	
LC2J43	409P777020	EMI-F-CHIP - BLM21A05	
LC3J41	409P777020	EMI-F-CHIP - BLM21A05	
LC7CBA	409P876020	EMI-F-CHIP - CNF20C470S/CKD510JB1H470S	
LC7CCA	409P876020	EMI-F-CHIP - CNF20C470S/CKD510JB1H470S	
LC7CDA	409P876020	EMI-F-CHIP - CNF20C470S/CKD510JB1H470S	
LC7D02	409P875090	EMI-F-CHIP - ELKE103FA	
LC7D05	409P875090	EMI-F-CHIP - ELKE103FA	
LC7D10	409P876020	EMI-F-CHIP - CNF20C470S/CKD510JB1H470S	
LC7D11	409P876020	EMI-F-CHIP - CNF20C470S/CKD510JB1H470S	
LC7D12	409P876020	EMI-F-CHIP - CNF20C470S/CKD510JB1H470S	
LC7D13	409P876020	EMI-F-CHIP - CNF20C470S/CKD510JB1H470S	
LC7D14	409P876020	EMI-F-CHIP - CNF20C470S/CKD510JB1H470S	
LC7E10	409P876020	EMI-F-CHIP - CNF20C470S/CKD510JB1H470S	
LC7E11	409P876020	EMI-F-CHIP - CNF20C470S/CKD510JB1H470S	
LC7E12	409P876020	EMI-F-CHIP - CNF20C470S/CKD510JB1H470S	
LC7E13	409P876020	EMI-F-CHIP - CNF20C470S/CKD510JB1H470S	
LC7E14	409P876020	EMI-F-CHIP - CNF20C470S/CKD510JB1H470S	
LC7G01	409P876020	EMI-F-CHIP - CNF20C470S/CKD510JB1H470S	
LC7G02	409P876020	EMI-F-CHIP - CNF20C470S/CKD510JB1H470S	
LC7G03	409P876020	EMI-F-CHIP - CNF20C470S/CKD510JB1H470S	
LC7G04	409P876020	EMI-F-CHIP - CNF20C470S/CKD510JB1H470S	
LC7G05	409P876020	EMI-F-CHIP - CNF20C470S/CKD510JB1H470S	
LC7G06	409P876020	EMI-F-CHIP - CNF20C470S/CKD510JB1H470S	
LC7G07	409P876020	EMI-F-CHIP - CNF20C470S/CKD510JB1H470S	
LC7G08	409P876020	EMI-F-CHIP - CNF20C470S/CKD510JB1H470S	
LC7G09	409P875090	EMI-F-CHIP - ELKE103FA	
LC7G10	409P875090	EMI-F-CHIP - ELKE103FA	
LC7G11	409P876020	EMI-F-CHIP - CNF20C470S/CKD510JB1H470S	
LC7G12	409P876020	EMI-F-CHIP - CNF20C470S/CKD510JB1H470S	
LC7G13	409P876020	EMI-F-CHIP - CNF20C470S/CKD510JB1H470S	
LC7G14	409P876020	EMI-F-CHIP - CNF20C470S/CKD510JB1H470S	
LC7G15	409P876020	EMI-F-CHIP - CNF20C470S/CKD510JB1H470S	
LC7G16	409P876020	EMI-F-CHIP - CNF20C470S/CKD510JB1H470S	
LC7G17	409P876020	EMI-F-CHIP - CNF20C470S/CKD510JB1H470S	

TRANSFORMERS

T5A31	**349P221010**	**TRANS-HORIZ**
T5A32	**336P040010**	**TRANS-HORIZ-DRIVE**
T5A51	**334P281010**	**TRANS-FLYBACK**
T9A20	**350P806010**	**TRANS-PWR - ETS19AB1R5BG**
T9A50	**350P807010**	**TRANS-PWR - ETS42AD485NC**

VARIABLE RESISTORS

	129P070020	**VR-FOCUS:MT010315-157**
RV9D00	**65P100020**	**VAR - ERZV10D271CS**

RESISTORS

CHIP Type Resistors (Listed by Value)

Part No.	Value	part No.	Value
103P509050	1/16W 0OHM	103P493020	1/16W 2K-F
103P508040	1/16W 2.2-J	103P493030	1/16W 2.2K-F
103P500050	1/16W 22-J	103P502090	1/16W 2.2K-J
103P500070	1/16W 33-J	103P493030	1/16W 2.2K-F
103P500080	1/16W 39-J	103P502090	1/16W 2.2K-J
103P500090	1/16W 47-J	103P493050	1/16W 2.7K-F
103P501000	1/16W 56-J	103P503000	1/16W 2.7K-J
103P501010	1/16W 68-J	103P493050	1/16W 2.7K-F
103P794060	1/16W 75-F	103P503000	1/16W 2.7K-J
103P509090	1/16W 75-J	103P503010	1/16W 3.3K-J
103P501020	1/16W 82-J	103P493090	1/16W 3.9K-F
103P501030	1/16W 100-J	103P503020	1/16W 3.9K-J
103P401030	1/10W 100-J	103P493060	1/16W 3K-F
103P501040	1/16W 120-J	103P494010	1/16W 4.7K-F
103P401050	1/10W 150-J	103P503030	1/16W 4.7K-J
103P490050	1/16W 150-F	103P494020	1/16W 5.1K-F
103P501050	1/16W 150-J	103P503040	1/16W 5.6K-J
103P490070	1/16W 180-F	103P494050	1/16W 6.8K-F
103P501060	1/16W 180-J	103P503050	1/16W 6.8K-J
103P501070	1/16W 220-J	103P503060	1/16W 8.2K-J
103P491000	1/16W 240-F	103P494090	1/16W 10K-F
103P501080	1/16W 270-J	103P503070	1/16W 10K-J
103P401080	1/10W 270-J	103P503080	1/16W 12K-J
103P491020	1/16W 300-F	103P503080	1/16W 12K-J
103P501090	1/16W 330-J	103P503090	1/16W 15K-J
103P491040	1/16W 360-F	103P504000	1/16W 18K-J
103P491050	1/16W 390-F	103P504010	1/16W 22K-J
103P502000	1/16W 390-J	103P504020	1/16W 27K-J
103P502010	1/16W 470-J	103P496000	1/16W 30K-F
103P491090	1/16W 560-F	103P504030	1/16W 33K-J
103P502020	1/16W 560-J	103P504040	1/16W 39K-J
103P492000	1/16W 620-F	103P504050	1/16W 47K-J
103P492010	1/16W 680-F	103P504060	1/16W 56K-J
103P502030	1/16W 680-J	103P496080	1/16W 62K-F
103P492030	1/16W 820-F	103P496090	1/16W 68K-F
103P502040	1/16W 820-J	103P504070	1/16W 68K-J
103P492050	1/16W 1K-F	103P504080	1/16W 82K-J
103P502050	1/16W 1K-J	103P504090	1/16W 100K-J
103P492060	1/16W 1.1K-F	103P505000	1/16W 120K-J
103P502060	1/16W 1.2K-J	103P505090	1/16W 680K-J
103P492090	1/16W 1.5K-F	103P506000	1/16W 820K-J
103P502070	1/16W 1.5K-J	103P506010	1/16W 1M-J
103P402070	1/8W 1.5K-J	103P506070	1/16W 3.3M-J
103P502080	1/16W 1.8K-J		

RESISTORS

Conventional Resistors (By Ref #)

Ref #	Part #	Part Name & Description	[#]
R2J21	109D151050	R-CARBON - 1/4W 75-J	
R2J31	109D151050	R-CARBON - 1/4W 75-J	
R3E02	103P712080	R-CARBON - 1/4W 1.8K-J	
R3E04	103P712080	R-CARBON - 1/4W 1.8K-J	
R3E05	103P714060	R-CARBON - 1/4W 56K-J	
R3E06	103P713080	R-CARBON - 1/4W 12K-J	
R3E09	109D151010	R-CARBON - 1/4W 2.2-J	

Model Legend: (a) WS-48315, (b) WS-55315, (c) WS-65315

Ref #	Part #	Part Name & Description	[#]
R3E11	109D151010	R-CARBON - 1/4W 2.2-J	
R3E12	109D151010	R-CARBON - 1/4W 2.2-J	
R3E14	109D151010	R-CARBON - 1/4W 2.2-J	
R3E15	103P713050	R-CARBON - 1/4W 6.8K-J	
R3E16	103P713050	R-CARBON - 1/4W 6.8K-J	
R4B01	103P465040	R-METAL - 1/4W 16K-F	
R4B02	103P465040	R-METAL - 1/4W 16K-F	
R4B03	103P713090	R-CARBON - 1/4W 15K-J	
R4B10	103C188040	R-METAL - 2W 2.2-J	
R4B12	103C188040	R-METAL - 2W 2.2-J	
R4B13	103P466000	R-METAL - 1/4W 2.4K-F	
R4B14	103P466000	R-METAL - 1/4W 2.4K-F	
R4B16	109P095010	R-METAL-LIN - 1/4W 5.1K-J	
R4B17	103P711090	R-CARBON - 1/4W 330-J	
R4B18	103P338020	R-CARBON-25 - 1/4W 1.5-J	
R4B23	103P411070	R-CARBON - 1/4W 220-J	
R4B24	103P712050	R-CARBON - 1/4W 1K-J	ab
R4B25	103P712050	R-CARBON - 1/4W 1K-J	ab
R4B26	103P713030	R-CARBON - 1/4W 4.7K-J	c
R4B27	103P465040	R-METAL - 1/4W 16K-F	
R5A00	**103P711030**	**R-CARBON - 1/4W 100-J**	
R5A01	103P713010	R-CARBON - 1/4W 3.3K-J	
R5A02	103P711030	R-CARBON - 1/4W 100-J	
R5A03	103P713010	R-CARBON - 1/4W 3.3K-J	
R5A04	103P462040	R-METAL - 1/4W 910-F	
R5A05	103P713010	R-CARBON - 1/4W 3.3K-J	
R5A06	103P712050	R-CARBON - 1/4W 1K-J	ab
R5A07	103P714080	R-CARBON - 1/4W 82K-J	
R5A08	103P714050	R-CARBON - 1/4W 47K-J	
R5A09	103P714040	R-CARBON - 1/4W 39K-J	
R5A10	103P714040	R-CARBON - 1/4W 39K-J	
R5A11	103P713070	R-CARBON - 1/4W 10K-J	
R5A12	103P712050	R-CARBON - 1/4W 1K-J	ab
R5A13	103P464020	R-METAL - 1/4W 2.4K-F	
R5A14	103P464030	R-METAL - 1/4W 5.6K-F	
R5A15	103P713030	R-CARBON - 1/4W 4.7K-J	c
R5A16	103P714010	R-CARBON - 1/4W 22K-J	
R5A17	103P712050	R-CARBON - 1/4W 1K-J	ab
R5A18	103P712050	R-CARBON - 1/4W 1K-J	ab
R5A19	103P712010	R-CARBON - 1/4W 470-J	c
R5A20	103P714050	R-CARBON - 1/4W 47K-J	
R5A21	103P713030	R-CARBON - 1/4W 4.7K-J	c
R5A22	103P714010	R-CARBON - 1/4W 22K-J	
R5A23	103P713070	R-CARBON - 1/4W 10K-J	
R5A24	103P714070	R-CARBON - 1/4W 68K-J	
R5A25	103P464030	R-METAL - 1/4W 5.6K-F	
R5A26	103P464030	R-METAL - 1/4W 5.6K-F	
R5A27	103P713070	R-CARBON - 1/4W 10K-J	
R5A28	103P715010	R-CARBON - 1/4W 150K-J	
R5A29	103P714040	R-CARBON - 1/4W 39K-J	
R5A30	103P714040	R-CARBON - 1/4W 39K-J	
R5A31	103P712080	R-CARBON - 1/4W 1.8K-J	ab
R5A32	103P713070	R-CARBON - 1/4W 10K-J	
R5A33	103P463060	R-METAL - 1/4W 3K-F	
R5A34	103P711000	R-CARBON - 1/4W 56-J	
R5A35	103P142010	R-CARBON - 1/2W 470-J	
R5A36	103C393020	R-METAL-P - 3W 3.9K-J	c
R5A36	103C393030	R-METAL-P - 3W 4.7K-J	ab
R5A37	103C393020	R-METAL-P - 3W 3.9K-J	c
R5A37	103C393030	R-METAL-P - 3W 4.7K-J	ab

Ref #	Part #	Part Name & Description	[#]
R5A38	103C197040	R-METAL - 3W 0.33-J	
R5A39	103P140090	R-CARBON - 1/2W 47-J	
R5A40	103P714090	R-CARBON - 1/4W 100K-J	
R5A41	103P715020	R-CARBON - 1/4W 180K-J	
R5A42	103P713070	R-CARBON - 1/4W 10K-J	
R5A43	103P714010	R-CARBON - 1/4W 22K-J	
R5A44	103P712090	R-CARBON - 1/4W 2.2K-J	
R5A45	103P143050	R-CARBON - 1/2W 6.8K-J	
R5A46	103C391050	R-METAL-P - 3W 150-J	
R5A47	103P714080	R-CARBON - 1/4W 82K-J	
R5A48	103P714050	R-CARBON - 1/4W 47K-J	
R5A49	103P711030	R-CARBON - 1/4W 100-J	
R5A50	103P714050	R-CARBON - 1/4W 47K-J	
R5A51	103P712050	R-CARBON - 1/4W 1K-J	ab
R5A52	103P713010	R-CARBON - 1/4W 3.3K-J	
R5A53	103P713070	R-CARBON - 1/4W 10K-J	
R5A54	103P714010	R-CARBON - 1/4W 22K-J	
R5A55	103P143050	R-CARBON - 1/2W 6.8K-J	
R5A56	**103P715060**	**R-CARBON - 1/4W 390K-J**	
R5A57	103P711030	R-CARBON - 1/4W 100-J	
R5A58	**103P464080**	**R-METAL - 1/4W 9.1K-F**	
R5A59	103P461070	R-METAL - 1/4W 470-F	
R5A60	103P464000	R-METAL - 1/4W 4.3K-F	
R5A61	103P465010	R-METAL - 1/4W 12K-F	
R5A62	103P711030	R-CARBON - 1/4W 100-J	
R5A62	103P711070	R-CARBON - 1/4W 220-J	
R5A63	103P466080	R-METAL - 1/4W 62K-F	
R5A64	103P712010	R-CARBON - 1/4W 470-J	
R5A65	**103P141030**	**R-CARBON - 1/2W 100-J**	
R5A66	103P466010	R-METAL - 1/4W 33K-F	
R5A67	103P465080	R-METAL - 1/4W 24K-F	
R5A68	103P463050	R-METAL - 1/4W 2.7K-F	
R5A69	103P462010	R-METAL - 1/4W 680-F	
R5A70	103P463070	R-METAL - 1/4W 3.3K-F	
R5A71	103P713070	R-CARBON - 1/4W 10K-J	
R5A72	103P463050	R-METAL - 1/4W 2.7K-F	
R5A73	103P713070	R-CARBON - 1/4W 10K-J	
R5A74	103P713070	R-CARBON - 1/4W 10K-J	
R5A75	103P713070	R-CARBON - 1/4W 10K-J	
R5A76	103P713070	R-CARBON - 1/4W 10K-J	
R5A77	103P711090	R-CARBON - 1/4W 330-J	
R5A78	**103P714010**	**R-CARBON - 1/4W 22K-J**	
R5A79	103P713030	R-CARBON - 1/4W 4.7K-J	
R5A80	109P175010	R-WIRE - 2W 0.12-J	
R5A81	103P711030	R-CARBON - 1/4W 100-J	
R5A82	**103P370090**	**R-FUSE - 1/4W 47-J**	
R5A83	103P464070	R-METAL - 1/4W 8.2K-F	
R5A84	103P464070	R-METAL - 1/4W 8.2K-F	
R5A85	103P710070	R-CARBON - 1/4W 33-J	
R5A86	103P466030	R-METAL - 1/4W 39K-F	
R5A87	103P142060	R-CARBON - 1/2W 1.2K-J	
R5A88	103P714010	R-CARBON - 1/4W 22K-J	
R5A89	103P466090	R-METAL - 1/4W 68K-F	
R5A90	**103P711060**	**R-CARBON - 1/4W 180-J**	
R5A91	103P467030	R-METAL - 1/4W 100K-F	
R5A92	103P465070	R-METAL - 1/4W 22K-F	
R5A93	**103P140090**	**R-CARBON - 1/2W 47-J**	
R5A94	103C390070	R-METAL-P - 3W 33-J	
R5A95	**103P714030**	**R-CARBON - 1/4W 33K-J**	
R5A96	103P466080	R-METAL - 1/4W 62K-F	

Model Legend: (a) WS-48315, (b) WS-55315, (c) WS-65315

Ref #	Part #	Part Name & Description	[#]
R5A99	103P714090	R-CARBON - 1/4W 100K-J	
R5B01	103P714030	R-CARBON - 1/4W 33K-J	
R5B02	103P714090	R-CARBON - 1/4W 100K-J	
R5B03	103P712060	R-CARBON - 1/4W 1.2K-J	
R5B04	103P711030	R-CARBON - 1/4W 100-J	
R5B05	103P713070	R-CARBON - 1/4W 10K-J	
R5B06	103P713070	R-CARBON - 1/4W 10K-J	
R5H01	103P712050	R-CARBON - 1/4W 1K-J	
R5H02	103P758000	R-FUSE - 1/4W 1-J	
R5H03	103P714030	R-CARBON - 1/4W 33K-J	
R5H04	103P463060	R-METAL - 1/4W 3K-F	
R5H07	103P461060	R-METAL - 1/4W 430-F	
R5H08	103P711030	R-CARBON - 1/4W 100-J	
R5H09	103P711010	R-CARBON - 1/4W 68-J	
R5H10	103P710090	R-CARBON - 1/4W 47-J	
R5H11	103P712020	R-CARBON - 1/4W 560-J	
R5H12	103P712020	R-CARBON - 1/4W 560-J	
R5H13	103P712020	R-CARBON - 1/4W 560-J	
R5H14	103P710090	R-CARBON - 1/4W 47-J	
R5H15	103P710090	R-CARBON - 1/4W 47-J	
R5H16	103P710020	R-CARBON - 1/4W 12-J	
R5H17	103P710020	R-CARBON - 1/4W 12-J	
R5H22	103P711030	R-CARBON - 1/4W 100-J	
R5H23	103P713010	R-CARBON - 1/4W 3.3K-J	
R5H47	**103C392010**	**R-METAL-P - 3W 470-J**	
R5H48	103P712060	R-CARBON - 1/4W 1.2K-J	
R5H49	103P714070	R-CARBON - 1/4W 68K-J	
R5H50	103P714070	R-CARBON - 1/4W 68K-J	
R5H51	103P712060	R-CARBON - 1/4W 1.2K-J	
R5H55	103P140070	R-CARBON - 1/2W 33-J	
R5H56	103P140070	R-CARBON - 1/2W 33-J	
R5H58	103P148000	R-CARBON - 1/2W 1-J	
R5H59	103C191050	R-METAL - 3W 150-J	
R5H60	103C178080	R-METAL - 1W 4.7-J	
R5H67	103P148000	R-CARBON - 1/2W 1-J	
R5K01	109D031070	R-COMP - 1/2W 10K-K	
R5K02	103P412050	R-CARBON - 1/4W 1K-J	
R5K03	103P145000	R-CARBON - 1/2W 120K-J	
R5K04	103P144090	R-CARBON - 1/2W 100K-J	
R5K05	103P145000	R-CARBON - 1/2W 120K-J	
R5K06	103P144090	R-CARBON - 1/2W 100K-J	
R5K07	103P145000	R-CARBON - 1/2W 120K-J	
R5K08	103P144090	R-CARBON - 1/2W 100K-J	
R5K09	**103P762020**	**R-FUSE - 1/2W 560-J**	
R5K10	103P711010	R-CARBON - 1/4W 68-J	
R5K11	103P711090	R-CARBON - 1/4W 330-J	
R5K12	**103P760060**	**R-FUSE - 1/2W 27-J**	
R5K20	103P463060	R-METAL - 1/4W 3K-F	
R5K21	103P464090	R-METAL - 1/4W 10K-F	
R5K22	103P145050	R-CARBON - 1/2W 330K-J	
R5K23	103P145050	R-CARBON - 1/2W 330K-J	
R5K24	103P145050	R-CARBON - 1/2W 330K-J	
R5K25	103P713040	R-CARBON - 1/4W 5.6K-J	
R5K31	103P711030	R-CARBON - 1/4W 100-J	
R5K32	103P466020	R-METAL - 1/4W 2.4K-F	
R5K33	103P465060	R-METAL - 1/4W 20K-F	
R5K34	**103P760060**	**R-FUSE - 1/2W 27-J**	
R5K46	103P712010	R-CARBON - 1/4W 470-J	c
R5K50	**103P762050**	**R-FUSE - 1/2W 1K-J**	
R5K51	103P750010	R-FUSE - 1/4W 10-J	

Ref #	Part #	Part Name & Description	[#]
R5K52	109D031090	R-COMP - 1/2W 470K-K	
R5K53	103P714030	R-CARBON - 1/4W 33K-J	
R5K54	103P714010	R-CARBON - 1/4W 22K-J	
R6B01	103P711030	R-CARBON - 1/4W 100-J	
R6B02	103P713090	R-CARBON - 1/4W 15K-J	
R6B03	103P464020	R-METAL - 1/4W 2.4K-F	
R6B04	103P713000	R-CARBON - 1/4W 2.7K-J	
R6B05	103P410060	R-CARBON - 1/4W 27-J	
R6B06	103P462050	R-METAL - 1/4W 1K-F	
R6B07	103P711030	R-CARBON - 1/4W 100-J	
R6B08	103P710010	R-CARBON - 1/4W 10-J	
R6B09	103P711030	R-CARBON - 1/4W 100-J	
R6B10	103P713030	R-CARBON - 1/4W 4.7K-J	
R6B11	**103C194020**	**R-METAL - 3W 27K-J**	
R6B13	103P331030	R-CARBON - 1/4W 100-J	
R6B15	103P714090	R-CARBON - 1/4W 100K-J	
R6B16	103P411000	R-CARBON - 1/4W 56-J	
R6B17	101P221030	R-COMP - 1/2W 220-K	
R6B18	103P713040	R-CARBON - 1/4W 5.6K-J	
R6B19	103P713050	R-CARBON - 1/4W 6.8K-J	
R6B20	101P221030	R-COMP - 1/2W 220-K	
R6B21	103P467030	R-METAL - 1/4W 100K-F	
R6B22	103P467030	R-METAL - 1/4W 100K-F	
R6B23	103P711030	R-CARBON - 1/4W 100-J	
R6B24	103P713030	R-CARBON - 1/4W 4.7K-J	
R6B25	103P711030	R-CARBON - 1/4W 100-J	
R6B26	103P413050	R-CARBON - 1/4W 6.8K-J	
R6B27	103P711030	R-CARBON - 1/4W 100-J	
R6B30	103P719050	R-CARBON - 1/4W 0OHM (MAX 3A)	
R6B31	103P712060	R-CARBON - 1/4W 1.2K-J	
R6G01	103P711030	R-CARBON - 1/4W 100-J	
R6G02	103P713090	R-CARBON - 1/4W 15K-J	
R6G03	103P464020	R-METAL - 1/4W 2.4K-F	
R6G04	103P463040	R-METAL - 1/4W 2.4K-F	
R6G05	103P410060	R-CARBON - 1/4W 27-J	
R6G06	103P462030	R-METAL - 1/4W 820-F	
R6G07	103P711030	R-CARBON - 1/4W 100-J	
R6G08	103P710010	R-CARBON - 1/4W 10-J	
R6G09	103P711030	R-CARBON - 1/4W 100-J	
R6G10	103P713030	R-CARBON - 1/4W 4.7K-J	
R6G11	**103C194020**	**R-METAL - 3W 27K-J**	
R6G13	103P331030	R-CARBON - 1/4W 100-J	
R6G15	103P714090	R-CARBON - 1/4W 100K-J	
R6G16	103P411000	R-CARBON - 1/4W 56-J	
R6G17	101P221030	R-COMP - 1/2W 220-K	
R6G20	101P221030	R-COMP - 1/2W 220-K	
R6G21	103P467010	R-METAL - 1/4W 82K-F	
R6G22	103P467010	R-METAL - 1/4W 82K-F	
R6G23	103P711030	R-CARBON - 1/4W 100-J	
R6G30	103P719050	R-CARBON - 1/4W 0OHM (MAX 3A)	
R6G31	103P712060	R-CARBON - 1/4W 1.2K-J	
R6R01	103P711030	R-CARBON - 1/4W 100-J	
R6R02	103P713090	R-CARBON - 1/4W 15K-J	
R6R03	103P464020	R-METAL - 1/4W 2.4K-F	
R6R04	103P713000	R-CARBON - 1/4W 2.7K-J	
R6R05	103P410060	R-CARBON - 1/4W 27-J	
R6R06	103P462050	R-METAL - 1/4W 1K-F	
R6R07	103P711030	R-CARBON - 1/4W 100-J	
R6R08	103P710010	R-CARBON - 1/4W 10-J	
R6R09	103P711030	R-CARBON - 1/4W 100-J	

Model Legend: (a) WS-48315, (b) WS-55315, (c) WS-65315

Ref #	Part #	Part Name & Description	[#]
R6R10	103P713030	R-CARBON - 1/4W 4.7K-J	
R6R11	**103C194020**	**R-METAL - 3W 27K-J**	
R6R13	103P331030	R-CARBON - 1/4W 100-J	
R6R15	103P714090	R-CARBON - 1/4W 100K-J	
R6R16	103P411000	R-CARBON - 1/4W 56-J	
R6R17	101P221030	R-COMP - 1/2W 220-K	
R6R20	101P221030	R-COMP - 1/2W 220-K	
R6R21	103P467030	R-METAL - 1/4W 100K-F	
R6R22	103P467030	R-METAL - 1/4W 100K-F	
R6R23	103P711030	R-CARBON - 1/4W 100-J	
R6R30	103P719050	R-CARBON - 1/4W 0OHM (MAX 3A)	
R6R31	103P712060	R-CARBON - 1/4W 1.2K-J	
R7K01	103P712050	R-CARBON - 1/4W 1K-J	
R7K02	103P713010	R-CARBON - 1/4W 3.3K-J	
R7L26	103P462090	R-METAL - 1/4W 1.5K-F	
R7L27	103P463030	R-METAL - 1/4W 2.2K-F	
R7L28	103P463070	R-METAL - 1/4W 3.3K-F	
R7L29	103P464030	R-METAL - 1/4W 5.6K-F	
R7L30	103P465010	R-METAL - 1/4W 12K-F	
R7L31	103P466010	R-METAL - 1/4W 33K-F	
R7L32	103P466070	R-METAL - 1/4W 56K-F	
R8C02	103P713010	R-CARBON - 1/4W 3.3K-J	
R8C03	103P711090	R-CARBON - 1/4W 330-J	
R8C05	103C288070	R-METAL-CP - 2W 3.9-J	
R8C06	103C288070	R-METAL-CP - 2W 3.9-J	
R8C07	103C391050	R-METAL-P - 3W 150-J	
R8C10	103P713010	R-CARBON - 1/4W 3.3K-J	
R8C11	103P711090	R-CARBON - 1/4W 330-J	
R8C13	103C288070	R-METAL-CP - 2W 3.9-J	
R8C14	103C288070	R-METAL-CP - 2W 3.9-J	
R8C15	103C391050	R-METAL-P - 3W 150-J	
R8C18	103P713010	R-CARBON - 1/4W 3.3K-J	
R8C19	103P711090	R-CARBON - 1/4W 330-J	
R8C21	103C288070	R-METAL-CP - 2W 3.9-J	
R8C22	103C288070	R-METAL-CP - 2W 3.9-J	
R8C23	103C391050	R-METAL-P - 3W 150-J	
R8C26	103P713010	R-CARBON - 1/4W 3.3K-J	
R8C27	103P711090	R-CARBON - 1/4W 330-J	
R8C29	103C288070	R-METAL-CP - 2W 3.9-J	
R8C30	103C288070	R-METAL-CP - 2W 3.9-J	
R8C31	103C391050	R-METAL-P - 3W 150-J	
R8C34	103P713010	R-CARBON - 1/4W 3.3K-J	
R8C35	103P711090	R-CARBON - 1/4W 330-J	
R8C37	103C288070	R-METAL-CP - 2W 3.9-J	
R8C38	103C288070	R-METAL-CP - 2W 3.9-J	
R8C39	103C391050	R-METAL-P - 3W 150-J	
R8C42	103P713010	R-CARBON - 1/4W 3.3K-J	
R8C43	103P711090	R-CARBON - 1/4W 330-J	
R8C45	103C288070	R-METAL-CP - 2W 3.9-J	
R8C46	103C288070	R-METAL-CP - 2W 3.9-J	
R8C47	103C391050	R-METAL-P - 3W 150-J	
R8C60	103C191090	R-METAL - 3W 330-J	
R8C61	103C191090	R-METAL - 3W 330-J	
R8C62	103P713010	R-CARBON - 1/4W 3.3K-J	
R8C63	103P713010	R-CARBON - 1/4W 3.3K-J	
R8C64	103P713010	R-CARBON - 1/4W 3.3K-J	
R8C65	103P713010	R-CARBON - 1/4W 3.3K-J	
R8C66	103P713010	R-CARBON - 1/4W 3.3K-J	
R8C67	103P713010	R-CARBON - 1/4W 3.3K-J	

Ref #	Part #	Part Name & Description	[#]
R8P03	103P712080	R-CARBON - 1/4W 1.8K-J	ab
R8P03	103P713030	R-CARBON - 1/4W 4.7K-J	c
R8P04	103P711070	R-CARBON - 1/4W 220-J	
R8P05	103P712010	R-CARBON - 1/4W 470-J	
R8P06	103P711070	R-CARBON - 1/4W 220-J	
R9A02	102P084000	R-CEMENT-WIRE - 15W 2.2-K	
R9A03	**109C010010**	**R-COMP - 1/2W 1M-K**	
R9A05	109C010010	R-COMP - 1/2W 1M-K	
R9A06	109C010010	R-COMP - 1/2W 1M-K	
R9A09	103P145030	R-CARBON - 1/2W 220K-J	
R9A10	103P713090	R-CARBON - 1/4W 15K-J	
R9A11	103P145030	R-CARBON - 1/2W 220K-J	
R9A12	103P713060	R-CARBON - 1/4W 8.2K-J	
R9A20	103C391020	R-METAL-P - 3W 82-J	
R9A21	103P712050	R-CARBON - 1/4W 1K-J	
R9A22	103P713000	R-CARBON - 1/4W 2.7K-J	
R9A23	103P710090	R-CARBON - 1/4W 47-J	
R9A24	103P142070	R-CARBON - 1/2W 1.5K-J	
R9A25	103P462050	R-METAL - 1/4W 1K-F	
R9A26	103P462050	R-METAL - 1/4W 1K-F	
R9A27	103P712050	R-CARBON - 1/4W 1K-J	
R9A28	103P713070	R-CARBON - 1/4W 10K-J	
R9A29	103P711030	R-CARBON - 1/4W 100-J	
R9A30	103P710080	R-CARBON - 1/4W 39-J	
R9A50	103P712090	R-CARBON - 1/4W 2.2K-J	
R9A51	103P714010	R-CARBON - 1/4W 22K-J	
R9A52	103C183070	R-METAL - 2W 10K-J	
R9A53	103P712030	R-CARBON - 1/4W 680-J	
R9A54	109P175020	R-WIRE - 2W 0.15-J	
R9A55	109P175010	R-WIRE - 2W 0.12-J	
R9A57	103P712070	R-CARBON - 1/4W 1.5K-J	
R9A58	103P145030	R-CARBON - 1/2W 220K-J	
R9A59	103P710010	R-CARBON - 1/4W 10-J	
R9A60	103P710090	R-CARBON - 1/4W 47-J	
R9A61	103P713040	R-CARBON - 1/4W 5.6K-J	
R9A63	103P712090	R-CARBON - 1/4W 2.2K-J	
R9A64	103P713030	R-CARBON - 1/4W 4.7K-J	
R9A65	103P465090	R-METAL - 1/4W 27K-F	
R9A66	103P714010	R-CARBON - 1/4W 22K-J	
R9A67	103P710050	R-CARBON - 1/4W 22-J	
R9A68	103C390020	R-METAL-P - 3W 12-J	
R9A70	109D151090	R-CARBON - 1/4W 33-J	
R9A71	103P145030	R-CARBON - 1/2W 220K-J	
R9A72	103P462050	R-METAL - 1/4W 1K-F	
R9A73	103P464020	R-METAL - 1/4W 2.4K-F	
R9A74	103P465080	R-METAL - 1/4W 24K-F	
R9A75	103P716000	R-CARBON 1/6W OR 1/4W 820K-J	
R9A76	103P715070	R-CARBON - 1/4W 470K-J	
R9A77	103P713030	R-CARBON - 1/4W 4.7K-J	
R9A80	103C193060	R-METAL - 3W 8.2K-J	
R9A81	103P142090	R-CARBON - 1/2W 2.2K-J	
R9A82	103P465050	R-METAL - 1/4W 18K-F	
R9A83	103P464010	R-METAL - 1/4W 4.7K-F	
R9A84	103P713070	R-CARBON - 1/4W 10K-J	
R9B01	103P711030	R-CARBON - 1/4W 100-J	
R9B02	103P713080	R-CARBON - 1/4W 12K-J	
R9B03	103P714050	R-CARBON - 1/4W 47K-J	
R9B09	109D151030	R-CARBON - 1/4W 4.7-J	
R9D00	**109D036020**	**R-COMP - 1/2W 4.7M-K**	

Model Legend: (a) WS-48315, (b) WS-55315, (c) WS-65315

CAPACITORS & TRIMMERS

CHIP Type Capacitors (Listed by Value)

Part No.	Value	Part No.	Value
154P350040	SL50V 2P-C	141P141010	B50V 1500P-K
154P340040	50V 3P-C	141P141030	B50V 2200P-K
154P341010	CH50V 10P-C	141P141070	B50V 4700P-K
154P351020	SL50V 10P-J	141P143080	F50V 0.01M-Z
154P341030	CH50V 12P-J	141P142010	B50V 0.01M-K
154P341050	CH50V 15P-J	141P143010	B25V 0.068M-K
154P341090	CH50V 22P-J	141P143020	B16V 0.082M-K
154P342030	CH50V 33P-J	141P134090	F50V 0.1M-Z
154P342070	CH50V 47P-J	141P144020	F25V 0.1M-Z
154P342090	CH50V 56P-J	141P143030	B16V 0.1M-K
154P353000	SL50V 56P-J	141P146040	B10V 0.22M-K
154P343030	CH50V 82P-J	141P138080	B25V 0.33M-K
154P343050	CH50V 100P-J	141P146080	B10V 0.47M-K
154P343070	CH50V 120P-J	141P139090	B16V 0.47M-K
154P343090	CH50V 150P-J	181P526010	50V 1M-M
141P140010	B50V 220P-K	141P144060	F16V 1M-Z
154P344030	CH50V 220P-J	141P147020	B10V/6.3V 1M-K
154P344050	CH50V 270P-J	181P526020	50V 2.2M-M
141P140050	B50V 470P-K	181P532030	16V 10M-M
154P345030	CH25V 560P-J	181P530030	6.3V 47M-M
154P345070	CH25V 820P-J	181P520030	6.3V 47M-M
141P140090	B50V 1000P-K	181P522060	6V 47M-M
154P345090	CH25V 1000P-J	181P520040	6.3V 100M-M

Capcitors by Reference #

Ref #	Part #	Part Name & Description	[#]
C1A13	181P352040	C-ELEC - 16V 100M-M	
C1A21	181P352040	C-ELEC - 16V 100M-M	
C1A24	181P352040	C-ELEC - 16V 100M-M	
C1A26	172P262010	C-M-POLY - 50V 0.047M-J	
C1B13	181P355090	C-ELEC - 50V 100M-M	
C1B21	181P352040	C-ELEC - 16V 100M-M	
C1B24	181P352040	C-ELEC - 16V 100M-M	
C1B26	172P262010	C-M-POLY - 50V 0.047M-J	
C2AGC	155P239040	C-CER - CH50V 100P-J	
C2AGD	142P024060	C-CER - BF50V 0.1M-Z	
C2AJB	142P024060	C-CER - BF50V 0.1M-Z	
C2AJD	155P239040	C-CER - CH50V 100P-J	
C2AKC	181P352040	C-ELEC - 16V 100M-M	
C2AKD	155P239040	C-CER - CH50V 100P-J	
C2ANC	142P024060	C-CER - BF50V 0.1M-Z	
C2AND	155P239040	C-CER - CH50V 100P-J	
C2APC	181P352040	C-ELEC - 16V 100M-M	
C2APD	155P239040	C-CER - CH50V 100P-J	
C2ARC	142P024060	C-CER - BF50V 0.1M-Z	
C2ARD	155P239040	C-CER - CH50V 100P-J	
C2ATC	142P024060	C-CER - BF50V 0.1M-Z	
C2ATD	155P239040	C-CER - CH50V 100P-J	
C2AYC	142P024060	C-CER - BF50V 0.1M-Z	
C2AYD	155P239040	C-CER - CH50V 100P-J	
C2AZC	142P024060	C-CER - BF50V 0.1M-Z	
C2AZE	181P355050	C-ELEC - 50V 10M-M	
C2AZF	155P239040	C-CER - CH50V 100P-J	
C2K01	181P355050	C-ELEC - 50V 10M-M	
C2K03	181P355050	C-ELEC - 50V 10M-M	
C2K08	181P355050	C-ELEC - 50V 10M-M	
C2K10	181P355050	C-ELEC - 50V 10M-M	
C2K15	181P355050	C-ELEC - 50V 10M-M	
C2K17	181P355050	C-ELEC - 50V 10M-M	
C2K18	181P351060	C-ELEC - 10V 330M-M	
C2K22	181P355050	C-ELEC - 50V 10M-M	
C2K27	181P355050	C-ELEC - 50V 10M-M	
C2K43	181P352030	C-ELEC - 16V 47M-M	
C2K48	181P352030	C-ELEC - 16V 47M-M	
C2K50	181P355050	C-ELEC - 50V 10M-M	
C2K63	181P355050	C-ELEC - 50V 10M-M	
C2K71	181P352030	C-ELEC - 16V 47M-M	
C2K75	181P352030	C-ELEC - 16V 47M-M	
C2L29	181P352030	C-ELEC - 16V 47M-M	
C2L52	181P352030	C-ELEC - 16V 47M-M	
C2M28	181P351080	C-ELEC - 10V 1000M-M	
C2M29	181P351080	C-ELEC - 10V 1000M-M	
C2M31	181P352030	C-ELEC - 16V 47M-M	
C2M34	181P352030	C-ELEC - 16V 47M-M	
C2M36	181P352030	C-ELEC - 16V 47M-M	
C2M38	181P352030	C-ELEC - 16V 47M-M	
C2M43	181P352030	C-ELEC - 16V 47M-M	
C2M44	181P352030	C-ELEC - 16V 47M-M	
C2M54	181P355050	C-ELEC - 50V 10M-M	
C2M64	181P352030	C-ELEC - 16V 47M-M	
C2M80	181P352030	C-ELEC - 16V 47M-M	
C2M88	181P355010	C-ELEC - 50V 1M-M	
C2M89	181P352030	C-ELEC - 16V 47M-M	
C2M98	181P355050	C-ELEC - 50V 10M-M	
C2MA4	181P352030	C-ELEC - 16V 47M-M	
C2MA6	181P352030	C-ELEC - 16V 47M-M	
C2MA9	181P352030	C-ELEC - 16V 47M-M	
C2MC4	181P352030	C-ELEC - 16V 47M-M	
C2MC8	181P352040	C-ELEC - 16V 100M-M	
C2MD6	181P352040	C-ELEC - 16V 100M-M	
C2MD7	181P352040	C-ELEC - 16V 100M-M	
C2N03	181P352070	C-ELEC - 16V 470M-M	
C2N27	181P350060	C-ELEC - 3V 1000M-M	
C2NA6	181P355050	C-ELEC - 50V 10M-M	
C2NC5	181P355050	C-ELEC - 50V 10M-M	
C2P01	181P352070	C-ELEC - 16V 470M-M	
C2P26	181P350060	C-ELEC - 3V 1000M-M	
C2P32	181P352030	C-ELEC - 16V 47M-M	
C2P42	181P352030	C-ELEC - 16V 47M-M	
C2R29	181P352030	C-ELEC - 16V 47M-M	
C2V14	181P352040	C-ELEC - 16V 100M-M	
C2V17	181P355040	C-ELEC - 50V 4.7M-M	
C2V19	181P352040	C-ELEC - 16V 100M-M	
C2V29	181P352040	C-ELEC - 16V 100M-M	
C2V30	181P118010	C-ELEC - 50V 0.68M-M	
C2V32	181P355000	C-ELEC - 50V 0.47M-M	
C2V48	172P166030	C-TF - 50V 0.1M-J	
C2V49	172P166030	C-TF - 50V 0.1M-J	
C2V55	181P352040	C-ELEC - 16V 100M-M	
C2V57	181P355060	C-ELEC - 50V 22M-M	
C2V61	181P352040	C-ELEC - 16V 100M-M	
C2W02	181P352080	C-ELEC - 16V 1000M-M	
C2W05	181P352030	C-ELEC - 16V 47M-M	
C2W09	181P352030	C-ELEC - 16V 47M-M	
C2W14	181P352030	C-ELEC - 16V 47M-M	

Model Legend: (a) WS-48315, (b) WS-55315, (c) WS-65315

Ref #	Part #	Part Name & Description	[#]
C3A14	181P355050	C-ELEC - 50V 10M-M	
C3A20	181P355050	C-ELEC - 50V 10M-M	
C3A21	181P355050	C-ELEC - 50V 10M-M	
C3A28	181P355050	C-ELEC - 50V 10M-M	
C3A29	181P355050	C-ELEC - 50V 10M-M	
C3A32	181P355050	C-ELEC - 50V 10M-M	
C3A33	181P355050	C-ELEC - 50V 10M-M	
C3A34	181P355030	C-ELEC - 50V 3.3M-M	
C3A46	181P355050	C-ELEC - 50V 10M-M	
C3A49	181P355050	C-ELEC - 50V 10M-M	
C3E01	**181P354050**	**C-ELEC - 35V 47M-M**	
C3E02	181P355010	C-ELEC - 50V 1M-M	
C3E03	172P331010	C-POLY - 50V 6800P-J	
C3E04	181P355010	C-ELEC - 50V 1M-M	
C3E05	172P331010	C-POLY - 50V 6800P-J	
C3E06	181P355050	C-ELEC - 50V 10M-M	
C3E07	181P353090	C-ELEC - 5V 2200M-M	
C3E08	141P197080	C-CER - F50V 0.1M-Z	
C3E09	172P262050	C-M-POLY - 50V 0.1M-J	
C3E11	172P262050	C-M-POLY - 50V 0.1M-J	
C3E12	172P262050	C-M-POLY - 50V 0.1M-J	
C3E14	172P262050	C-M-POLY - 50V 0.1M-J	
C3J01	181P352030	C-ELEC - 16V 47M-M	
C3J05	181P355050	C-ELEC - 50V 10M-M	
C3J06	181P122070	C-ELEC-NP - 25V 10M-M	
C3J09	181P355050	C-ELEC - 50V 10M-M	
C3J10	181P122070	C-ELEC-NP - 25V 10M-M	
C3J24	181P352030	C-ELEC - 16V 47M-M	
C3K02	181P355010	C-ELEC - 50V 1M-M	
C3K04	181P355010	C-ELEC - 50V 1M-M	
C3K09	181P355010	C-ELEC - 50V 1M-M	
C3K11	181P355010	C-ELEC - 50V 1M-M	
C3K16	181P355010	C-ELEC - 50V 1M-M	
C3K18	181P355010	C-ELEC - 50V 1M-M	
C3K23	181P355010	C-ELEC - 50V 1M-M	
C3K25	181P355010	C-ELEC - 50V 1M-M	
C3K29	181P355010	C-ELEC - 50V 1M-M	
C3K31	181P355010	C-ELEC - 50V 1M-M	
C3K62	181P355010	C-ELEC - 50V 1M-M	
C3K64	181P355010	C-ELEC - 50V 1M-M	
C4B01	**172P261030**	**C-M-POLY - 50V 0.01M-J**	
C4B02	181P358000	C-ELEC - 35V 1000M-M	
C4B03	172P383030	C-M-POLY - 100V 0.47M-K	
C4B04	181P184020	C-ELEC - 35V 100M-M	
C4B06	172P330090	C-POLY - 50V 4700P-J	
C4B08	172P263070	C-M-POLY - 50V 1.0M-J	
C4B09	181P355060	C-ELEC - 50V 22M-M	
C4B10	181P354050	C-ELEC - 35V 47M-M	
C4B11	181P353090	C-ELEC - 5V 2200M-M	
C5A01	**181P354050**	**C-ELEC - 35V 47M-M**	
C5A02	181P355050	C-ELEC - 50V 10M-M	
C5A03	142P020090	C-CER - B50V 1000P-K	
C5A04	172P263010	C-M-POLY - 50V 0.33M-J	
C5A05	172P262010	C-M-POLY - 50V 0.047M-J	
C5A10	181P191000	C-ELEC - 160V 22M-M/Q	
C5A12	181P354090	C-ELEC - 35V 470M-M	
C5A17	142P020090	C-CER - B50V 1000P-K	
C5A18	142P020090	C-CER - B50V 1000P-K	
C5A21	172P262050	C-M-POLY - 50V 0.1M-J	
C5A22	181P355050	C-ELEC - 50V 10M-M	

Ref #	Part #	Part Name & Description	[#]
C5A23	181P355050	C-ELEC - 50V 10M-M	
C5A31	172P571030	C-M-PLA-PP - 1500V 3300P-J	ab
C5A31	172P571040	C-M-PLA-PP - 1500VHP 3600P	c
C5A32	172P571030	C-M-PLA-PP - 1500V 3300P-J	ab
C5A32	172P571040	C-M-PLA-PP - 1500VHP 3600P	c
C5A34	154P262050	C-CER - R2KV 560P-K	
C5A35	142P012010	C-CER - B500V 4700P-K	
C5A36	172P524010	C-M-POLY - 250V 2.2M-J	
C5A37	172P436070	C-M-PLA-PP - 250V 0.56M-J	
C5A39	142P011030	C-CER - B500V 1000P-K	
C5A40	142P011000	C-CER - B500V 560P-K	
C5A41	181P352080	C-ELEC - 16V 1000M-M	
C5A42	181P352030	C-ELEC - 16V 47M-M	
C5A43	181P190050	C-ELEC - 160V 1M-M/Q	
C5A45	181P352070	C-ELEC - 16V 470M-M	
C5A50	142P024060	C-CER - BF50V 0.1M-Z	
C5A51	**154P260010**	**C-CER - R1KV 220P-K**	
C5A52	172P580090	C-M-PLA-PP - 1800V 2200P-J	
C5A55	172P088060	C-PLA-PP - 630V 6800P-J	
C5A56	181P352030	C-ELEC - 16V 47M-M	
C5A57	**172P262070**	**C-M-POLY - 50V 0.15M-J**	
C5A58	142P024060	C-CER - BF50V 0.1M-Z	
C5A59	142P023080	C-CER - BF50V 0.01M-Z	
C5A60	**172P262050**	**C-M-POLY - 50V 0.1M-J**	
C5A61	181P355040	C-ELEC - 50V 4.7M-M	
C5A62	142P023080	C-CER - BF50V 0.01M-Z	
C5A63	142P023080	C-CER - BF50V 0.01M-Z	
C5A64	181P352010	C-ELEC - 16V 22M-M	
C5A65	181P355050	C-ELEC - 50V 10M-M	
C5A66	142P024060	C-CER - BF50V 0.1M-Z	
C5A67	142P023080	C-CER - BF50V 0.01M-Z	
C5A68	181P123070	C-ELEC-NP - 50V 0.47M-M	
C5A69	142P024060	C-CER - BF50V 0.1M-Z	
C5A70	**172P264010**	**C-M-POLY - 50V 2.2M-J**	
C5A71	172P262060	C-M-POLY - 50V 0.12M-J	
C5A72	181P355010	C-ELEC - 50V 1M-M	
C5H01	181P354080	C-ELEC - 35V 330M-M	
C5H02	142P023080	C-CER - BF50V 0.01M-Z	
C5H03	142P023080	C-CER - BF50V 0.01M-Z	
C5H04	155P238090	C-CER - CH50V 270P-J	
C5H07	142P023080	C-CER - BF50V 0.01M-Z	
C5H16	172P186030	C-PLA-PP - 200V 0.01M-K	
C5H17	172P261030	C-M-POLY - 50V 0.01M-J	
C5H19	181P183010	C-ELEC - 25V 100M-M	
C5H20	181P352040	C-ELEC - 16V 100M-M	
C5H21	181P780060	C-ELEC - 160V 10M-M	
C5H24	181P192060	C-ELEC - 200V 22M-M/Q	
C5K00	172P572090	C-M-PLA-PP - 1500V 0.015M-J	
C5K01	172P572090	C-M-PLA-PP - 1500V 0.015M-J	
C5K02	181P198040	C-ELEC - 450V 4.7M-M/Q	
C5K03	142P020050	C-CER - B50V 470P-K	
C5K05	181P354050	C-ELEC - 35V 47M-M	
C5K12	181P352040	C-ELEC - 16V 100M-M	
C5K14	181P354050	C-ELEC - 35V 47M-M	
C5K15	181P194000	C-ELEC - 250V 10M-M/Q	
C5K16	172P331010	C-POLY - 50V 6800P-J	
C5K17	172P434010	C-M-PLA-PP - 250V 0.047M-J	
C6B01	**154P400010**	**C-CER - B1KV 220P-K**	
C6B02	181P195050	C-ELEC - 350V 10M-M/Q	
C6B03	155P231070	C-CER - CH50V 18P-J	

Model Legend: (a) WS-48315, (b) WS-55315, (c) WS-65315

Ref #	Part #	Part Name & Description	[#]
C6B04	142P023080	C-CER - BF50V 0.01M-Z	
C6B05	181P352030	C-ELEC - 16V 47M-M	
C6B06	142P023080	C-CER - BF50V 0.01M-Z	
C6B07	172P532050	C-M-POLY - 400V 0.1M-J	
C6B08	142P020030	C-CER - B50V 330P-K	
C6B09	142P023080	C-CER - BF50V 0.01M-Z	
C6B10	172P532050	C-M-POLY - 400V 0.1M-J	
C6B12	155P231050	C-CER - CH50V 15P-J	
C6B13	155P231090	C-CER - CH50V 22P-J	
C6B14	154P405000	C-CER - B3KV 1000P-K	
C6B15	154P405000	C-CER - B3KV 1000P-K	
C6G01	**154P400010**	**C-CER - B1KV 220P-K**	
C6G02	181P195050	C-ELEC - 350V 10M-M/Q	
C6G03	155P231090	C-CER - CH50V 22P-J	
C6G04	142P023080	C-CER - BF50V 0.01M-Z	
C6G05	181P352030	C-ELEC - 16V 47M-M	
C6G06	142P023080	C-CER - BF50V 0.01M-Z	
C6G07	172P532050	C-M-POLY - 400V 0.1M-J	
C6G09	142P023080	C-CER - BF50V 0.01M-Z	
C6G10	172P532050	C-M-POLY - 400V 0.1M-J	
C6G12	155P231050	C-CER - CH50V 15P-J	
C6G13	155P231090	C-CER - CH50V 22P-J	
C6G14	154P405000	C-CER - B3KV 1000P-K	
C6G15	154P405000	C-CER - B3KV 1000P-K	
C6R01	**154P400010**	**C-CER - B1KV 220P-K**	
C6R02	181P195050	C-ELEC - 350V 10M-M/Q	
C6R03	155P231070	C-CER - CH50V 18P-J	
C6R04	142P023080	C-CER - BF50V 0.01M-Z	
C6R05	181P352030	C-ELEC - 16V 47M-M	
C6R06	142P023080	C-CER - BF50V 0.01M-Z	
C6R07	172P532050	C-M-POLY - 400V 0.1M-J	
C6R09	142P023080	C-CER - BF50V 0.01M-Z	
C6R10	172P532050	C-M-POLY - 400V 0.1M-J	
C6R12	155P231050	C-CER - CH50V 15P-J	
C6R13	155P231090	C-CER - CH50V 22P-J	
C6R14	154P405000	C-CER - B3KV 1000P-K	
C6R15	154P405000	C-CER - B3KV 1000P-K	
C7A00	**154P345090**	**C-CER-CHIP - CH25V 1000P-J**	
C7A16	181P352030	C-ELEC - 16V 47M-M	
C7A99	181P352030	C-ELEC - 16V 47M-M	
C7ACB	181P355050	C-ELEC - 50V 10M-M	
C7B02	181P355010	C-ELEC - 50V 1M-M	
C7B88	181P355050	C-ELEC - 50V 10M-M	
C7B96	181P355010	C-ELEC - 50V 1M-M	
C7BMA	181P352030	C-ELEC - 16V 47M-M	
C7D00	181P352040	C-ELEC - 16V 100M-M	
C7D97	181P352040	C-ELEC - 16V 100M-M	
C7K01	181P352030	C-ELEC - 16V 47M-M	
C7RF2	181P355050	C-ELEC - 50V 10M-M	
C7S03	181P352030	C-ELEC - 16V 47M-M	
C8C03	181P358000	C-ELEC - 35V 1000M-M	
C8C04	142P024060	C-CER - BF50V 0.1M-Z	
C8C05	181P358000	C-ELEC - 35V 1000M-M	
C8C06	142P024060	C-CER - BF50V 0.1M-Z	
C8C09	155P233090	C-CER - CH50V 150P-J	
C8C11	155P233090	C-CER - CH50V 150P-J	
C8C14	155P233090	C-CER - CH50V 150P-J	
C8C18	181P358000	C-ELEC - 35V 1000M-M	
C8C19	142P024060	C-CER - BF50V 0.1M-Z	
C8C20	181P358000	C-ELEC - 35V 1000M-M	

Ref #	Part #	Part Name & Description	[#]
C8C21	142P024060	C-CER - BF50V 0.1M-Z	
C8C23	155P233090	C-CER - CH50V 150P-J	
C8C26	155P233090	C-CER - CH50V 150P-J	
C8C29	155P233090	C-CER - CH50V 150P-J	
C8C43	142P020080	C-CER - B50V 820P-K	
C8C44	142P020080	C-CER - B50V 820P-K	
C8C45	142P020080	C-CER - B50V 820P-K	
C8C46	142P020080	C-CER - B50V 820P-K	
C8C47	142P020080	C-CER - B50V 820P-K	
C8C48	142P020080	C-CER - B50V 820P-K	
C8D16	181P352030	C-ELEC - 16V 47M-M	
C8D19	181P352030	C-ELEC - 16V 47M-M	
C8D20	181P352030	C-ELEC - 16V 47M-M	
C8D21	181P352030	C-ELEC - 16V 47M-M	
C8D22	181P352030	C-ELEC - 16V 47M-M	
C8D29	181P355010	C-ELEC - 50V 1M-M	
C8D30	181P352030	C-ELEC - 16V 47M-M	
C8D31	181P352030	C-ELEC - 16V 47M-M	
C8D33	181P352030	C-ELEC - 16V 47M-M	
C8D39	181P352030	C-ELEC - 16V 47M-M	
C8D40	181P352030	C-ELEC - 16V 47M-M	
C8E01	181P352030	C-ELEC - 16V 47M-M	
C8E03	181P352030	C-ELEC - 16V 47M-M	
C8E05	181P352030	C-ELEC - 16V 47M-M	
C8E07	181P352030	C-ELEC - 16V 47M-M	
C8E09	181P352030	C-ELEC - 16V 47M-M	
C8E12	181P352030	C-ELEC - 16V 47M-M	
C8E14	181P352030	C-ELEC - 16V 47M-M	
C8E16	181P352030	C-ELEC - 16V 47M-M	
C8G00	181P352030	C-ELEC - 16V 47M-M	
C8G03	181P352020	C-ELEC - 16V 33M-M	
C8G05	181P352030	C-ELEC - 16V 47M-M	
C8G06	181P352030	C-ELEC - 16V 47M-M	
C9A05	**189P185070**	**C-CER - AC250V E1000P-M**	
C9A06	189P185070	C-CER - AC250V E1000P-M	
C9A07	189P153040	C-M-POLY - 250VAC 0.1M-M	
C9A08	189P185090	C-CER - AC250V E2200P-M	
C9A09	189P185090	C-CER - AC250V E2200P-M	
C9A10	189P185090	C-CER - AC250V E2200P-M	
C9A11	189P185090	C-CER - AC250V E2200P-M	
C9A13	189P152070	C-M-POLY - 250VAC 0.01M-M	
C9A14	189P152070	C-M-POLY - 250VAC 0.01M-M	
C9A15	181P355010	C-ELEC - 50V 1M-M	
C9A16	**189P185070**	**C-CER - AC250V E1000P-M**	
C9A17	189P185070	C-CER - AC250V E1000P-M	
C9A20	142P024060	C-CER - BF50V 0.1M-Z	
C9A22	181P199080	C-ELEC - 200V 47M-M/Q	
C9A25	172P262050	C-M-POLY - 50V 0.1M-J	
C9A27	154P270050	C-CER - SL1KV 22P-J	
C9A28	172P262050	C-M-POLY - 50V 0.1M-J	
C9A29	142P010090	C-CER - B500V 470P-K	
C9A30	142P010090	C-CER - B500V 470P-K	
C9A31	181P743040	C-ELEC - 16V 330M-M	
C9A32	181P352040	C-ELEC - 16V 100M-M	
C9A33	181P354060	C-ELEC - 35V 100M-M	
C9A34	181P354060	C-ELEC - 35V 100M-M	
C9A39	181P355010	C-ELEC - 50V 1M-M	
C9A50	**142P020050**	**C-CER - B50V 470P-K**	
C9A51	181P355090	C-ELEC - 50V 100M-M	
C9A52	154P260080	C-CER - R1KV 3300P-K	

Model Legend: (a) WS-48315, (b) WS-55315, (c) WS-65315

Ref #	Part #	Part Name & Description	[#]
C9A53	185D122040	C-ELEC - H200V 820M-M	
C9A54	154P260080	C-CER - R1KV 3300P-K	
C9A55	172P339070	C-POLY - 50V 560P-J	
C9A56	181P355080	C-ELEC - 50V 47M-M	
C9A57	142P010090	C-CER - B500V 470P-K	
C9A59	185D122040	C-ELEC - H200V 820M-M	
C9A60	154P400030	C-CER - B1KV 470P-K	
C9A61	142P010090	C-CER - B500V 470P-K	
C9A62	189D183010	C-ELEC - 400V 100M-KC	
C9A63	185D120040	C-ELEC - 160V 820M-M	
C9A64	181P190090	C-ELEC - 160V 10M-M/Q	
C9A65	181P194000	C-ELEC - 250V 10M-M/Q	
C9A66	142P012050	C-CER - B500V 0.01M-K	
C9A68	142P010090	C-CER - B500V 470P-K	
C9A69	181P736070	C-ELEC - 35V 330M-M	
C9A70	181P736070	C-ELEC - 35V 330M-M	
C9A71	181P736070	C-ELEC - 35V 330M-M	
C9A72	181P736070	C-ELEC - 35V 330M-M	
C9A73	181P736070	C-ELEC - 35V 330M-M	
C9A74	142P010090	C-CER - B500V 470P-K	
C9A75	181P355080	C-ELEC - 50V 47M-M	
C9A76	142P023080	C-CER - BF50V 0.01M-Z	
C9A77	142P020090	C-CER - B50V 1000P-K	
C9A78	142P020090	C-CER - B50V 1000P-K	
C9A79	181P736070	C-ELEC - 35V 330M-M	
C9A80	181P746040	C-ELEC - 35V 150M-M	
C9A82	142P024060	C-CER - BF50V 0.1M-Z	
C9A83	181P355050	C-ELEC - 50V 10M-M	
C9A84	181P352040	C-ELEC - 16V 100M-M	
C9A85	181P735010	C-ELEC - 25V 470M-M	
C9A86	181P735010	C-ELEC - 25V 470M-M	
C9A87	181P735010	C-ELEC - 25V 470M-M	
C9AAB	181P351070	C-ELEC - 10V 470M-M	
C9ABA	181P352040	C-ELEC - 16V 100M-M	
C9B01	142P023080	C-CER - BF50V 0.01M-Z	
C9B06	181P746050	C-ELEC - 35V 220M-M	
C9B07	142P020090	C-CER - B50V 1000P-K	
C9B08	181P743070	C-ELEC - 16V 1000M-M	
C9B10	181P352040	C-ELEC - 16V 100M-M	
C9B11	181P352080	C-ELEC - 16V 1000M-M	
C9C01	181P352030	C-ELEC - 16V 47M-M	
C9C02	181P352030	C-ELEC - 16V 47M-M	
C9C11	181P352030	C-ELEC - 16V 47M-M	
C9C12	181P352030	C-ELEC - 16V 47M-M	
C9C21	181P352030	C-ELEC - 16V 47M-M	
C9C22	181P352040	C-ELEC - 16V 100M-M	
C9C35	181P355050	C-ELEC - 50V 10M-M	
C9C38	181P355050	C-ELEC - 50V 10M-M	
C9C41	181P352030	C-ELEC - 16V 47M-M	
C9C42	181P352030	C-ELEC - 16V 47M-M	
C9C51	181P746040	C-ELEC - 35V 150M-M	
C9C54	181P743040	C-ELEC - 16V 330M-M	
C9C55	181P352070	C-ELEC - 16V 470M-M	
C9C61	181P352030	C-ELEC - 16V 47M-M	
C9C62	181P352040	C-ELEC - 16V 100M-M	
C9D00	**189P153040**	**C-M-POLY - 250VAC 0.1M-M**	
C9D01	189P153040	C-M-POLY - 250VAC 0.1M-M	
CF2N10	299P267010	RESONATOR-CER - CSBLA503KECZF30-B0	
CF2P10	299P267010	RESONATOR-CER - CSBLA503KECZF30-B0	
CF2V01	299P259010	OSC-CERAMIC - CSALA2M6964ZF01-B0	

Ref #	Part #	Part Name & Description	[#]
		SWITCHES	
S7L21	432P109010	SW-KEY BOARD - KSHS611BT	
S7L22	432P109010	SW-KEY BOARD - KSHS611BT	
S7L23	432P109010	SW-KEY BOARD - KSHS611BT	
S7L24	432P109010	SW-KEY BOARD - KSHS611BT	
S7L25	432P109010	SW-KEY BOARD - KSHS611BT	
S7L26	432P109010	SW-KEY BOARD - KSHS611BT	
S7L27	432P109010	SW-KEY BOARD - KSHS611BT	
S7L28	432P109010	SW-KEY BOARD - KSHS611BT	
S7L29	432P109010	SW-KEY BOARD - KSHS611BT	
		MISCELLANEOUS	
	096Z465030	TAPE-LENS	c
	096Z465080	TAPE-LENS	ab
	129P070020	VR-FOCUS	
	305P702030	2RF-SW	
	330P293010	**YOKE-DEFL - 625UH**	**c**
	330P293020	**YOKE-DEFL - 760UH**	**ab**
	338P054010	SVM-ASSY	
	411D044020	CORE-FERRITE - R19.5 L32	
	411D062010	CORE-FERRITE - R15 L18	
	449C141030	**SOCKET-CRT**	
	453B036010	CAP-ANODE - [R]	
	453B036020	CAP-ANODE - [GB]	
	480P053010	SPEAKER - 5"	a
	480P063010	SPEAKER - 6"	bc
	490P154010	LENS-BARREL - RED	a
	490P154020	LENS-BARREL - BLUE/GREEN	a
	490P174070	LENS-BARREL - RED	c
	490P174080	LENS-BARREL - GREEN	c
	490P174090	LENS-BARREL - BLUE	c
	490P220010	LENS-BARREL - BLUE	b
	490P220040	LENS-BARREL - RED/GREEN	b
	589C063010	CASTOR - DUAL WHEEL	
	597D843010	STIFFENER-MIRROR	c
	598D456010	BRACKET-MIRROR - TOP	a
	622B009020	TRAY - CRT-COOLANT	
	622D875010	CUSHION-TAPE - OPTICAL	ac
	622C086010	CLIP-MIRROR - TOP	a
	642C340010	BRACKET-MIRROR - TOP	c
	642C352010	CLIP-MIRROR - TOP	b
	642C394040	BOARD-SLIDE	a
	642C412020	BOARD-SLIDE	c
	642C412030	BOARD-SLIDE	b
	669D633010	SCREW-LIQUID - M6*1.0-17.5	
	703D125010	CAP - SCREW GRAY	c
	720C188050	COVER-FRONT	a
	720C250020	COVER-FRONT	c
	720C254010	COVER-FRONT	b
	750A449010	COVER-BACK - TOP	a
	761A209030	GRILLE - SPEAKER	a
	761A210010	GRILLE - SPEAKER	b
	761A211010	GRILLE - SPEAKER	c
	762B371030	COVER-BACK - BOTTOM	a
	762B378010	COVER-BACK	b
	762B378020	COVER-BACK	c
	767D048090	MIRROR - 65"	c
	767D072040	MIRROR - 48"	a
	767D072050	MIRROR - 55"	b

Model Legend: (a) WS-48315, (b) WS-55315, (c) WS-65315

Ref #	Part #	Part Name & Description	[#]
AG5K00	224D019040	AIR GAP - 2.0+-0.5KV	
AG6B01	224D019090	AIR GAP - 1.5+-0.5KV	
AG6B02	224D019090	AIR GAP - 1.5+-0.5KV	
AG6G01	224D019090	AIR GAP - 1.5+-0.5KV	
AG6G02	224D019090	AIR GAP - 1.5+-0.5KV	
AG6R01	224D019090	AIR GAP - 1.5+-0.5KV	
AG6R02	224D019090	AIR GAP - 1.5+-0.5KV	
F5A00	**283P144070**	**FUSE - 125V 3A**	
F9A02	**283P144090**	**FUSE - 125V 10A**	
F9A03	**283P144080**	**FUSE - 125V 5A**	
F9A04	**283P144090**	**FUSE - 125V 10A**	
F9A05	**283P144080**	**FUSE - 125V 5A**	
F9B01	**283P144070**	**FUSE - 125V 3A**	
F9D00	**283D131040**	**FUSE - S10A 125A**	
F9D01	**283P144060**	**FUSE - 125V 7A**	
J2AAA	452C385010	CONNECTOR-DVI	
J7CAA	452C383010	CONNECTOR-DSUB	
K9A50	**287P111010**	**RELAY-POWER - LKS1AF-5V**	
K9A51	287P111010	RELAY-POWER - LKS1AF-5V	
PC9A21	268P058020	PHOTO-COUPLER - ON3131-R/ON3161-R	
PC9A50	268P106020	PHOTO-COUPLER - CNZ3132	
PJ2J00	440C407010	PIN-JACK-BOARD-6P	
PJ2J01	440C410010	PIN-JACK-BOARD-5P	
PJ2J02	440C410010	PIN-JACK-BOARD-5P	
PJ2J03	440C410010	PIN-JACK-BOARD-5P	
PJ2J04	440C409010	PIN-JACK-BOARD-2P	
PJ2J05	440C408010	PIN-JACK-BOARD-3P	
PJ2J06	440C421010	PIN-JACK-BOARD-2P	
PJ2J11	440C412010	PIN-JACK-BOARD-3P	
TU1A01	**295P516010**	**TUNER-TV - 115-V-F045AP**	
TU1B01	295P516020	TUNER-TV - 115-V-F025AP	
X2M47	285P426040	QTZ-CRYST - 20.000MHZ	
X2N21	285P426010	QTZ-CRYST - 3.579545MHZ	
X2P21	285P426010	QTZ-CRYST - 3.579545MHZ	
X3A01	285P413010	QTZ-CRYST - 18.432MHZ	
X7A13	285P434020	QTZ-CRYST - 16.000MHZ	
X7J10	285P335050	QTZ-CRYST - 80.000MHZ	
Z7K01	939P617010	UNIT-PREAMP - GP1U283Q	

PRINTED CIRCUIT BOARDS

	930B899004	ASSY-PWB-MAIN	ab
	930B899005	ASSY-PWB-MAIN	c
	930B900002	ASSY-PWB-POWER	
	930B901003-48	ASSY-PWB-SIGNAL	a
	930B901003-55	ASSY-PWB-SIGNAL	b
	930B901003-65	ASSY-PWB-SIGNAL	c
	930B902001	ASSY-PWB-TERMINAL	
	934C062001	ASSY-PWB-CRT	
	934C063003	ASSY-PWB-DOUBLER	
	935D738001	ASSY-PWB-PREAMP	
	935D739001	ASSY-PWB-FRONT	
	935D740001	ASSY-PWB-CONTROL	

COSMETIC PARTS

	702A431010	PANEL-TERMINAL	
	703D125020	CAP - SCREW BLACK	c
	705C011020	DOOR - A/V INPUT	
	716C040010	BADGE-BRAND	
	775B140030	NAME-PLATE - WS-48315	a
	775B140040	NAME-PLATE - WS-55315	b
	775B140050	NAME-PLATE - WS-65315	c
	850A003010	INLAY-TERMINAL	

ACCESSORIES

	246C351030	CORD-AC - POWER	
	290P116010	REMOTE CONTROL - V24	
	I/QR WS48315	GUIDE - QUICK REFERENCE	
	I/B WS48315	GUIDE - OWNERS	

Model Legend: (a) WS-48315, (b) WS-55315, (c) WS-65315

Ref #	Part #	Part Name & Description
		SCREEN ASSEMBLY PARTS
WS-48315 Screen Parts (Figure 1)		
(1)	491P138020	SCREEN-LENTICULAR - 48"
(2)	491P139020	LENS-FRESNEL - 48"
(3)	597C027010	BRACKET-SCREEN FRAME
(4)	598D339010	BRACKET-SCREEN-SIDE
(5)	622B010010	HOLDER-SCREEN - TOP
(6)	622B011010	HOLDER-SCREEN - BOTTOM
(7)	622B012010	HOLDER-SCREEN - SIDE
(8)	622B013030	CLIP-DIAMOND SHIELD - 48"
(9)	635B109010	STIFFENER-SCREEN - TOP
(10)	751A005070	BEZEL-FRONT
(11)	760D628090	DIAMOND SHIELD - 48"

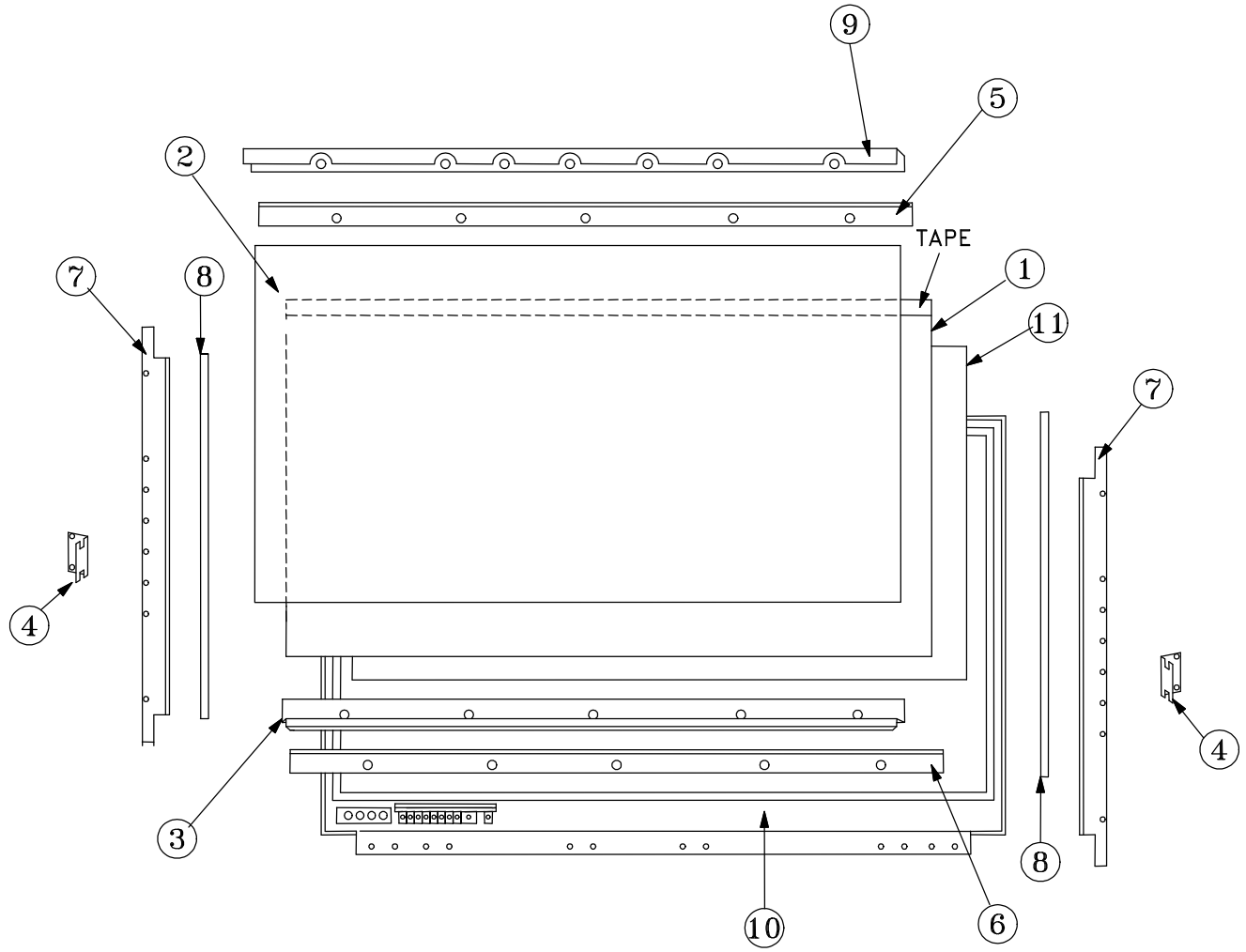

Figure 1: WS-48315
Screen Assembly Parts (Rear View)

Model Legend: (a) WS-48315, (b) WS-55315, (c) WS-65315

Ref #	Part #	Part Name & Description
WS-55315 Screen Parts (Figure2)		
(1)	491P103030	SCREEN-LENTICULAR - 55"
(2)	491P104030	LENS-FRESNEL - 55"
(3)	622B016010	CLIP-DIAMOND SHIELD - 55"
(4)	622C104010	HOLDER-SCREEN
(5)	701B481010	FRAME-SCREEN-TOP
(6)	701B482010	FRAME-SCREEN-SIDE
(7)	702A446010	CORNER-CAP
(8)	702A436010	PANEL-CONTROL
(9)	760D628080	DIAMOND SHIELD - 55"
(10)	598D491010	BRACKET-SCREEN SIDE
(11)	594C988010	BRACKET-SCREEN FRAME

Ref #	Part #	Part Name & Description
WS-65315 Screen Parts (Figure 2)		
(1)	491P105050	SCREEN-LENTICULAR - 65"
(2)	491P106080	LENS-FRESNEL - 65"
(3)	622B016020	CLIP-DIAMOND SHIELD - 65"
(4)	622C104020	HOLDER-SCREEN
(5)	701B481020	FRAME-SCREEN-TOP
(6)	701B482020	FRAME-SCREEN-SIDE
(7)	702A446010	CORNER-CAP
(8)	702A437010	PANEL-CONTROL
(9)	760D627070	DIAMOND SHIELD - 65"
(10)	598D491010	BRACKET-SCREEN SIDE
(11)	594C988010	BRACKET-SCREEN FRAME

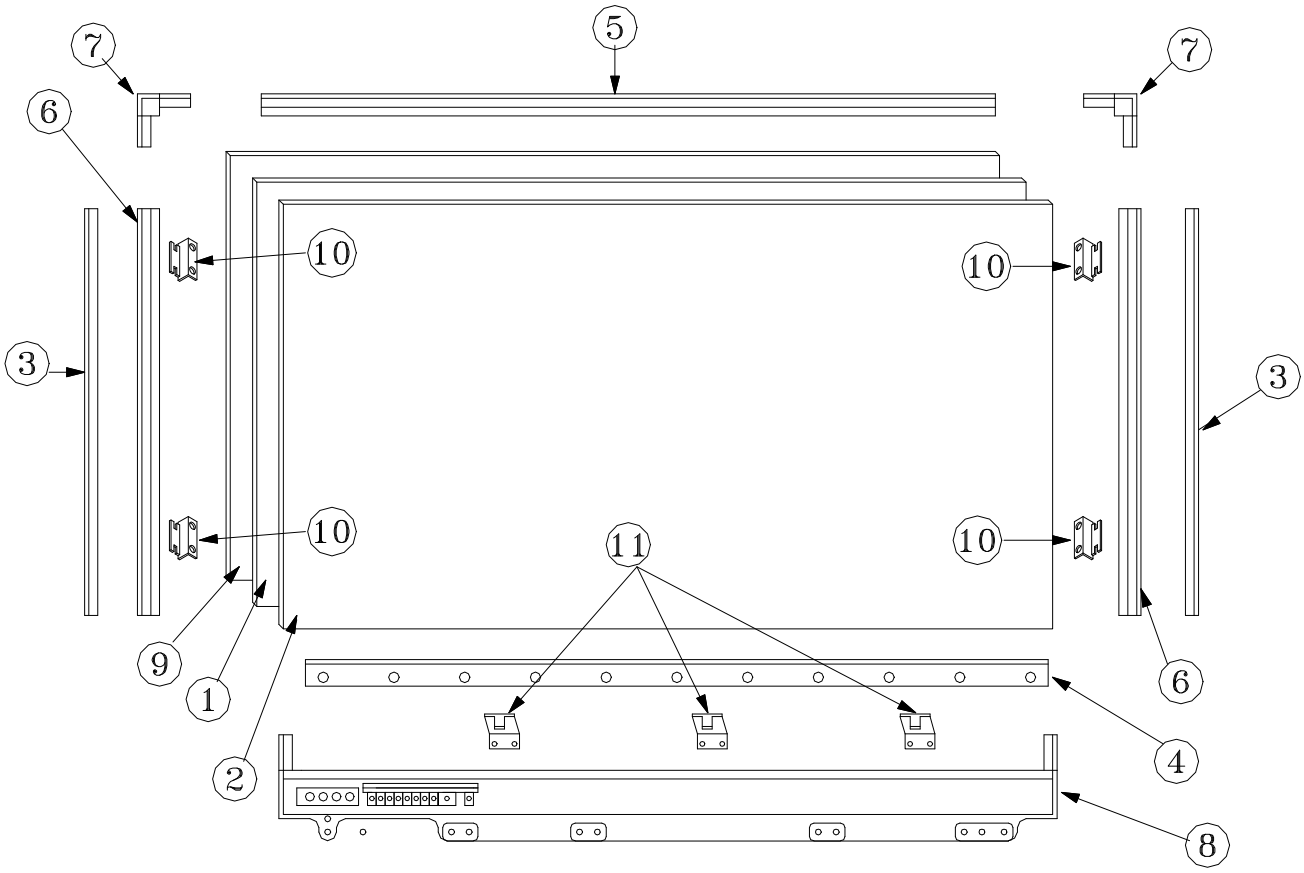

Figure 2: WS-55315 / WS-65315
Screen Assembly Parts (Rear View)

POWER SUPPLY

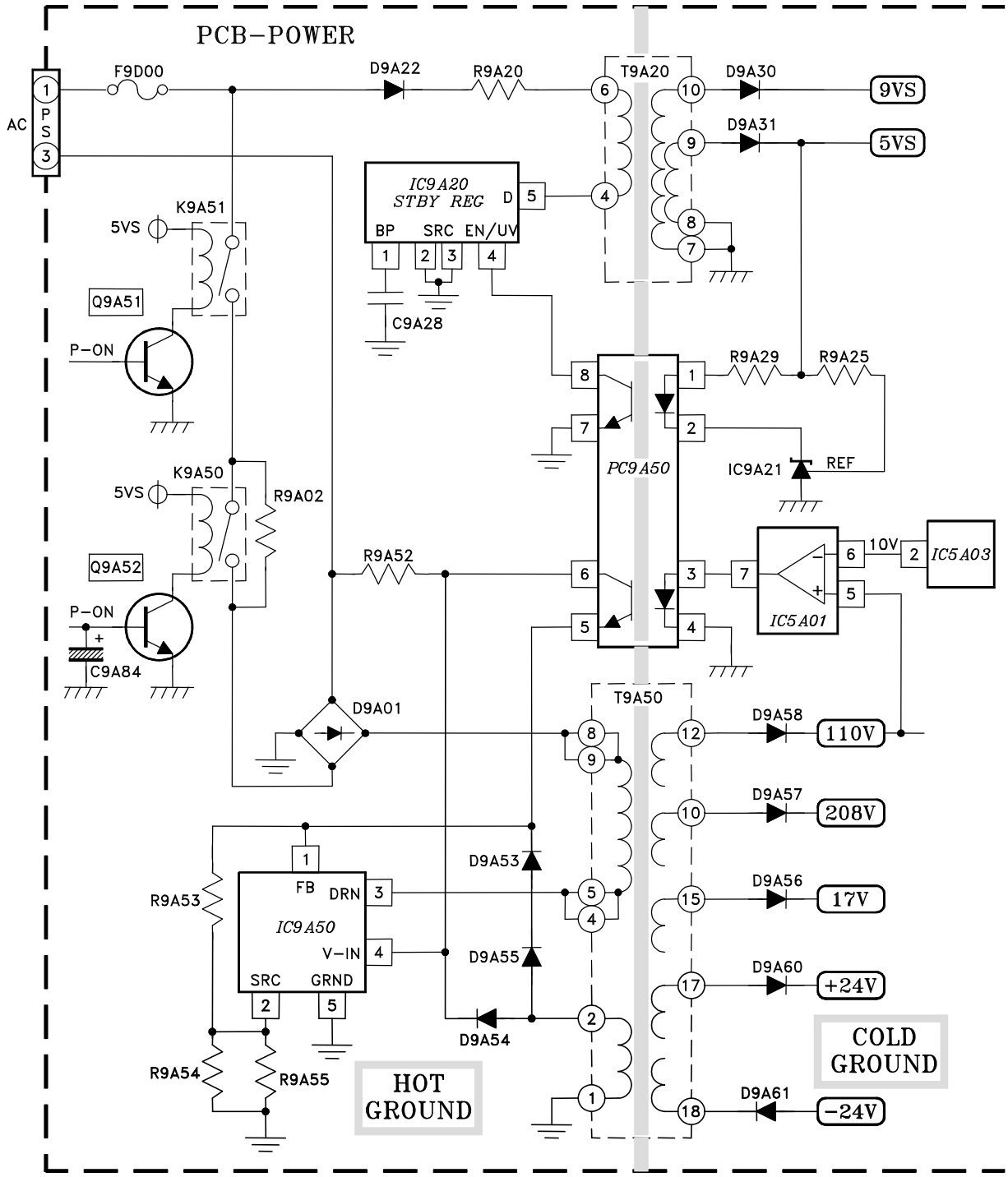

VIDEO/COLOR PATH

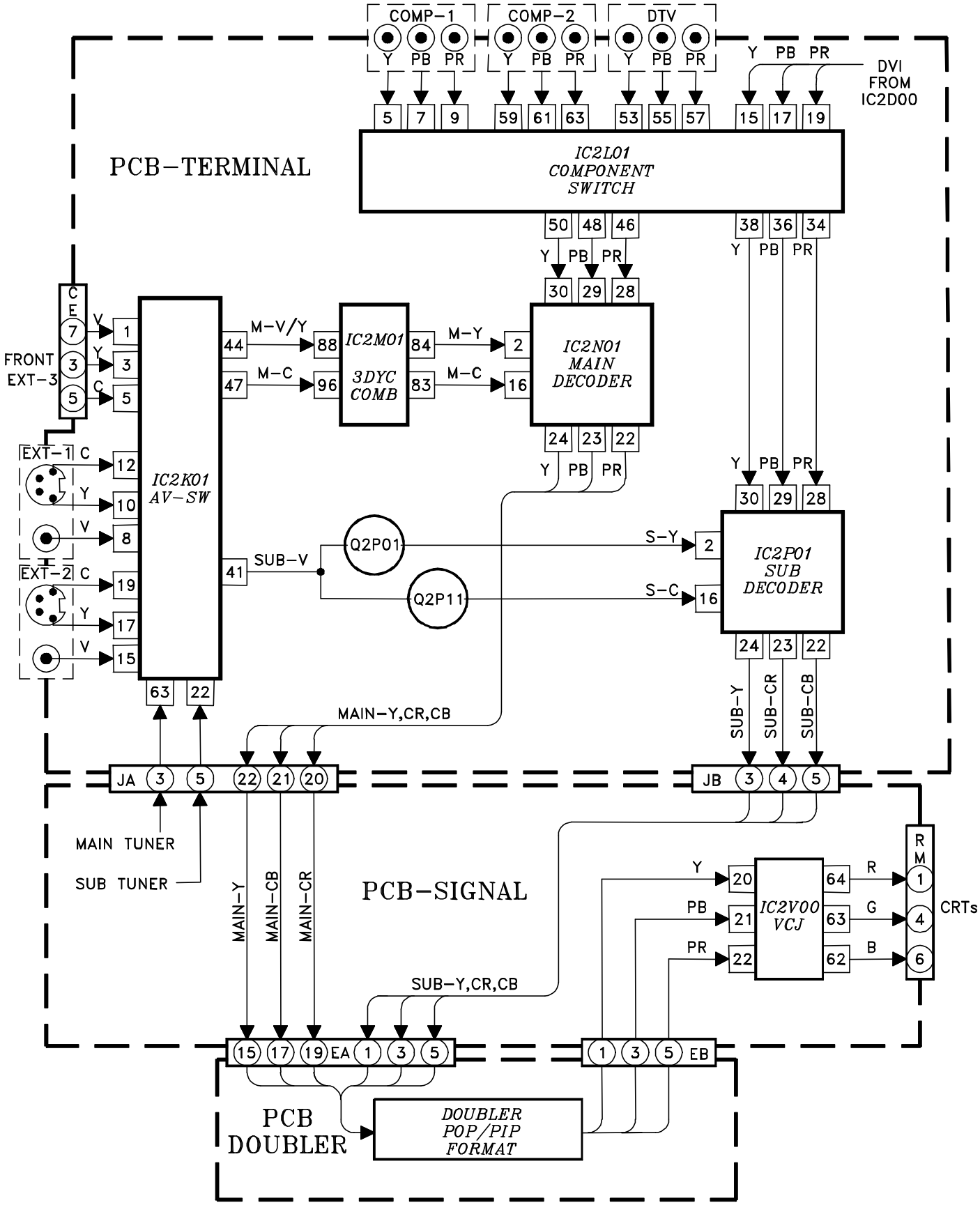

SYNC PATH

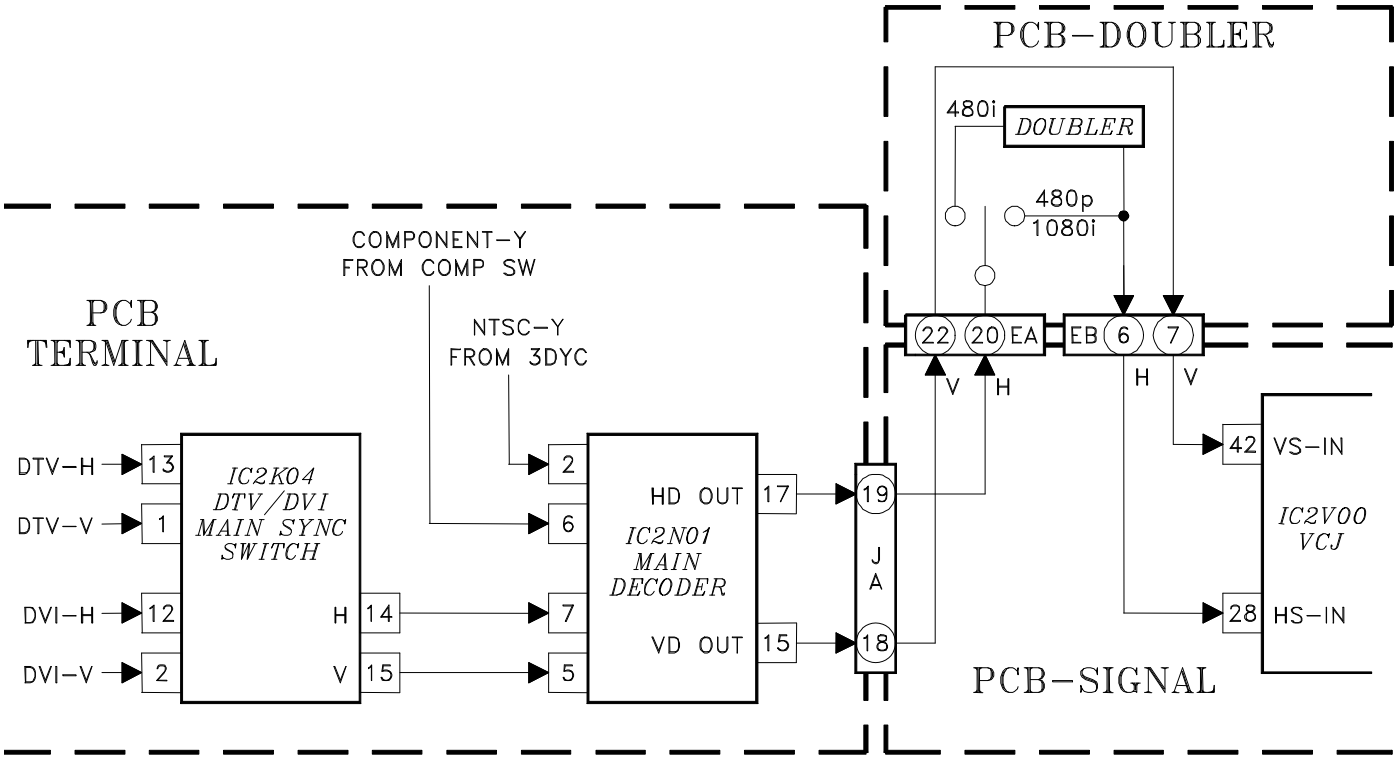
PCB-DOUBLER
480i
DOUBLER
480p
1080i
22
20
EA
EB
6
7
V
H
H
V
PCB
TERMINAL
COMPONENT-Y
FROM COMP SW
NTSC-Y
FROM 3DYC
DTV-H
13
DTV-V
1
DVI-H
12
DVI-V
2
IC2K04
DTV/DVI
MAIN SYNC
SWITCH
H
14
V
15
2
6
7
5
HD OUT
17
IC2N01
MAIN
DECODER
VD OUT
15
19
J
A
18
42
VS-IN
IC2V00
VCJ
28
HS-IN
PCB-SIGNAL

DEFLECTION / HV CIRCUIT

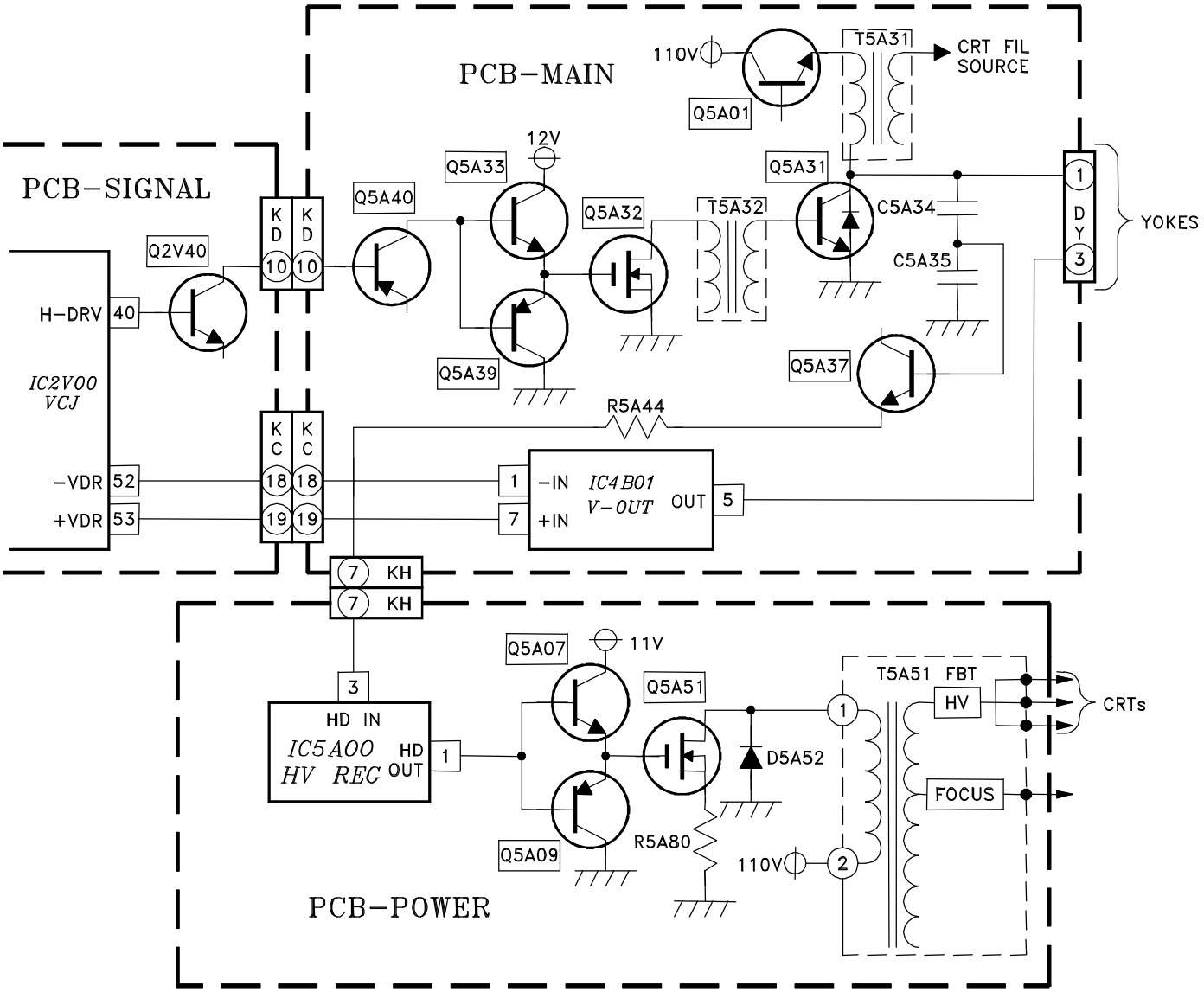

HV REGULATION

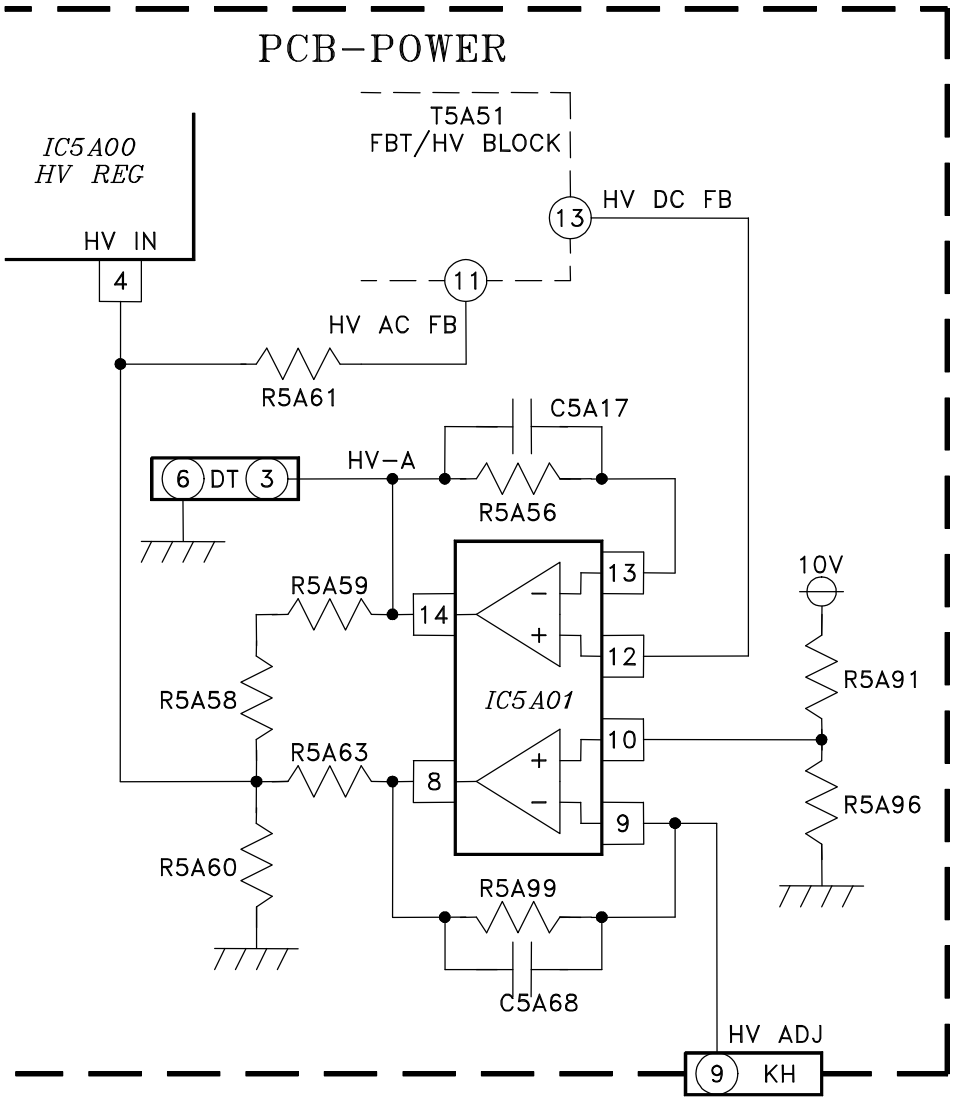

X-RAY PROTECT

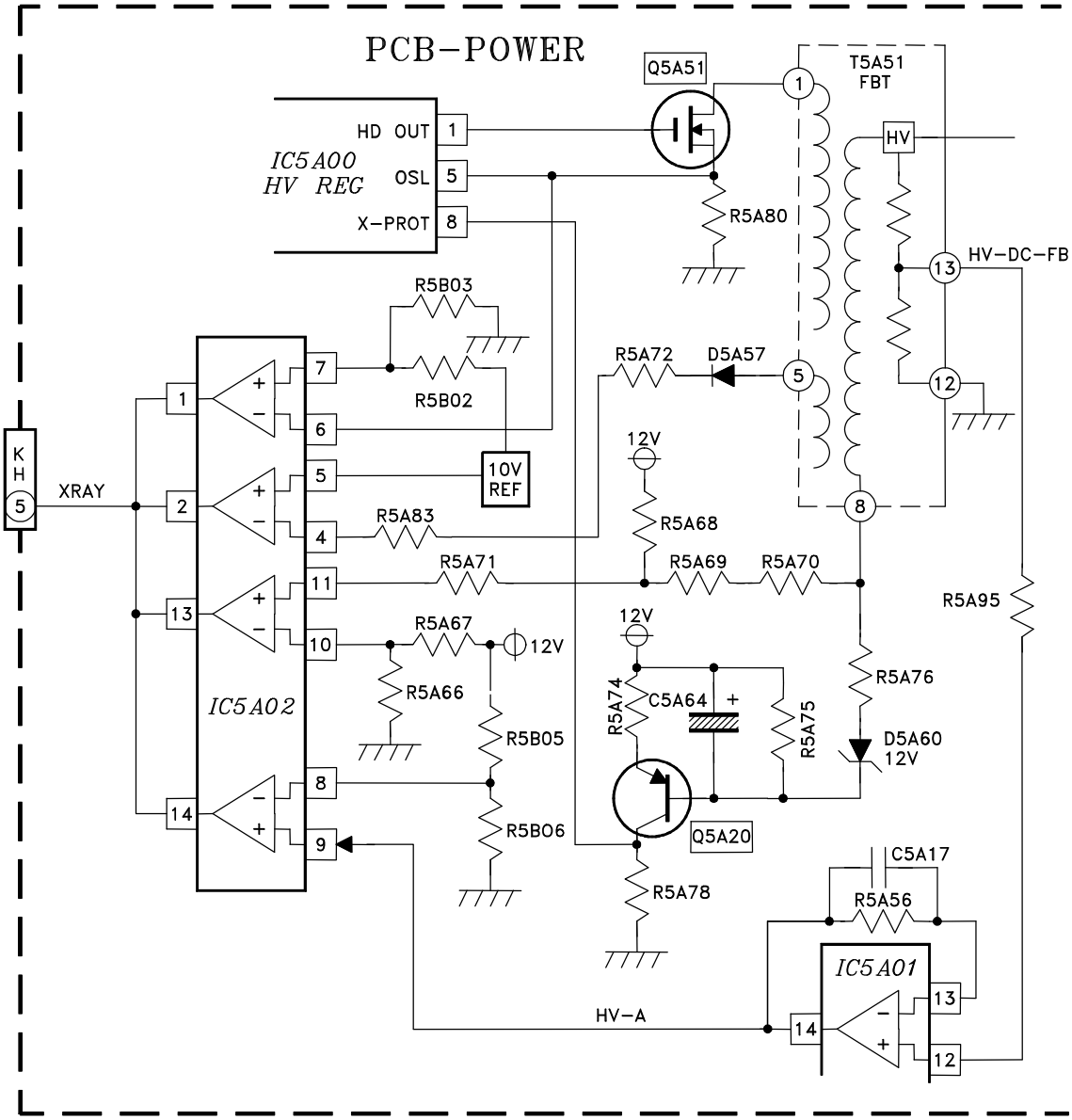

SOUND PATH

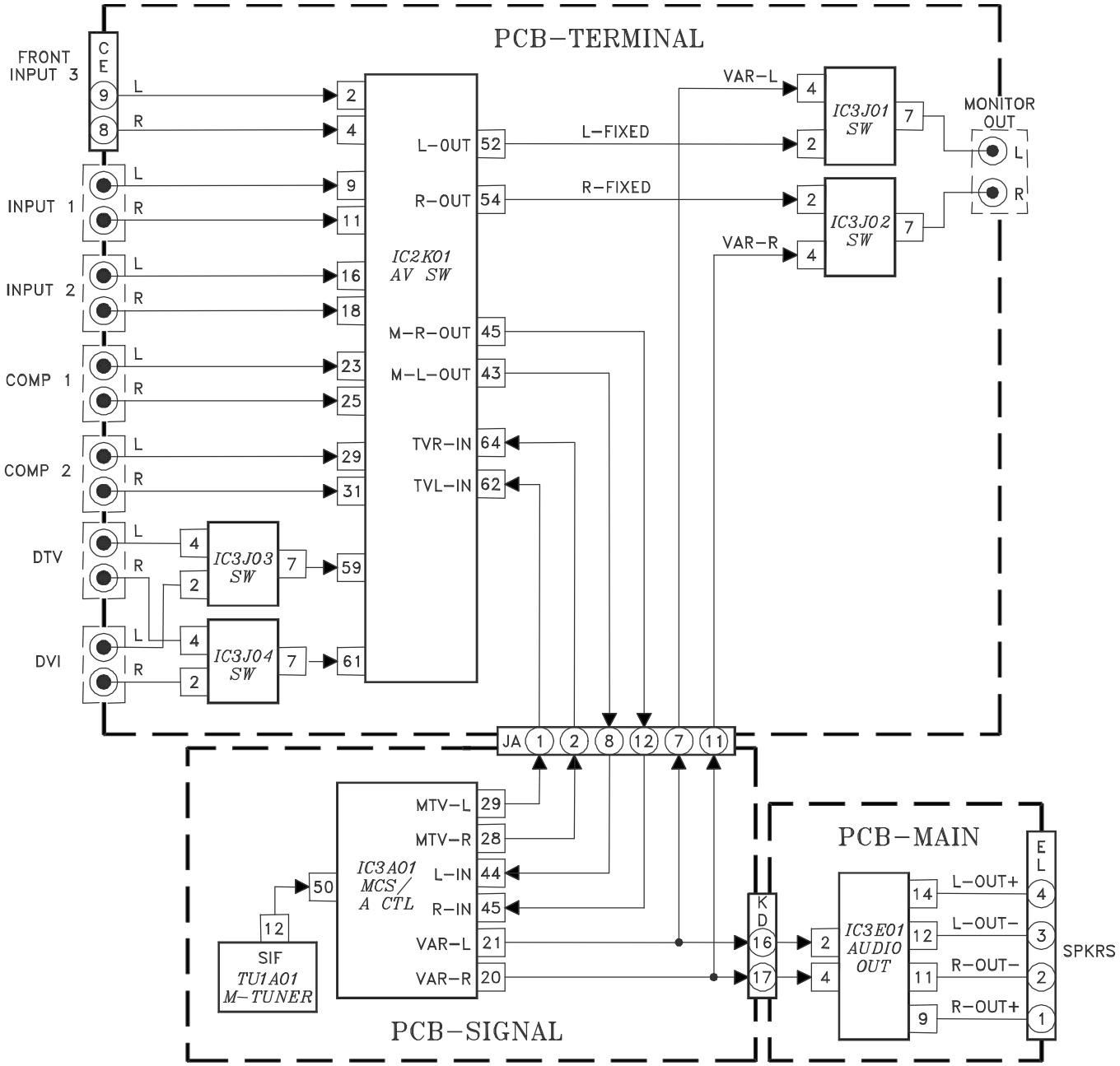
PCB−TERMINAL
FRONT INPUT 3
INPUT 1
INPUT 2
COMP 1
COMP 2
DTV
DVI
IC2K01 AV SW
L−OUT
R−OUT
M−R−OUT
M−L−OUT
TVR−IN
TVL−IN
L−FIXED
R−FIXED
VAR−L
VAR−R
IC3J01 SW
IC3J02 SW
IC3J03 SW
IC3J04 SW
MONITOR OUT
JA
PCB−SIGNAL
IC3A01 MCS/A CTL
MTV−L
MTV−R
L−IN
R−IN
SIF TU1A01 M−TUNER
PCB−MAIN
IC3E01 AUDIO OUT
L−OUT+
L−OUT−
R−OUT−
R−OUT+
SPKRS

CONVERGENCE CIRCUIT

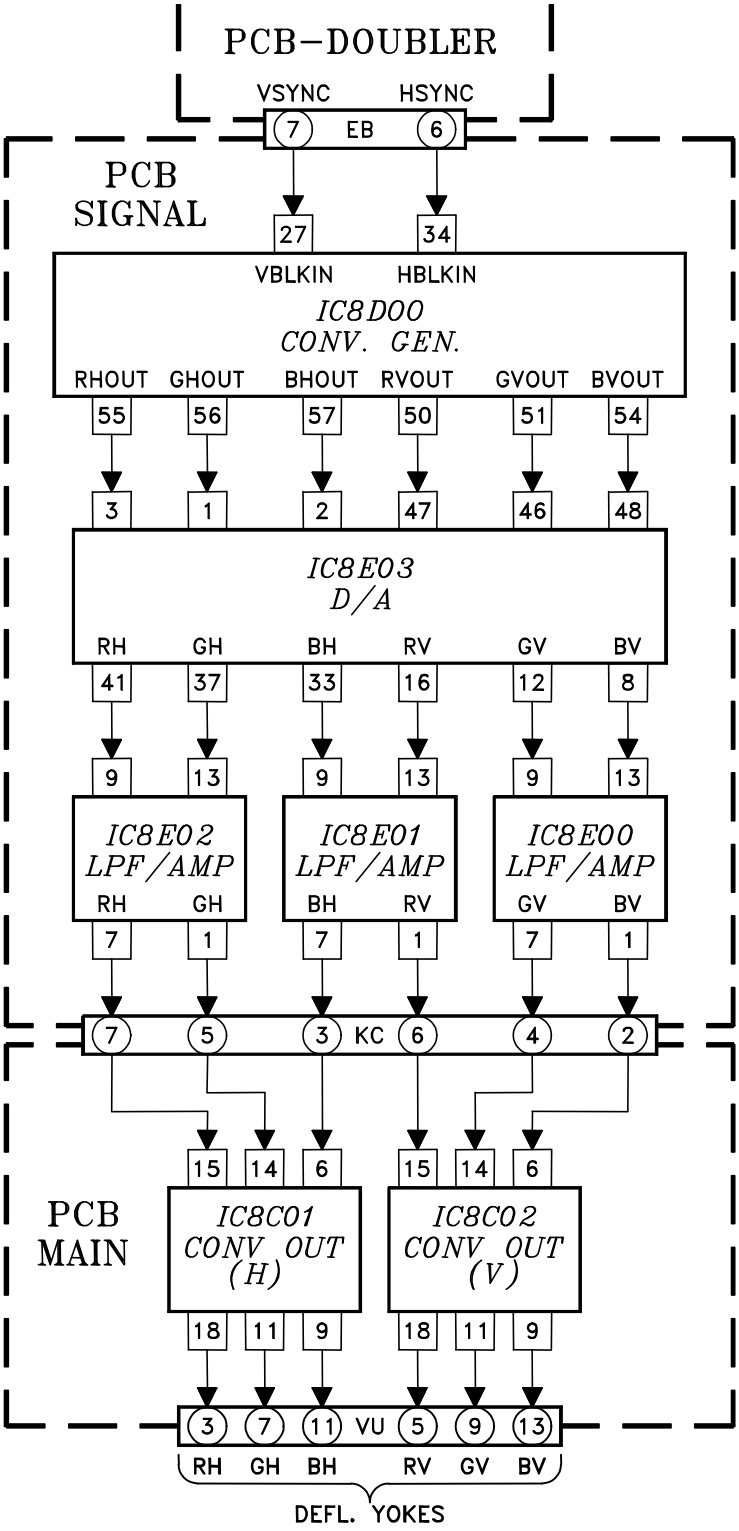
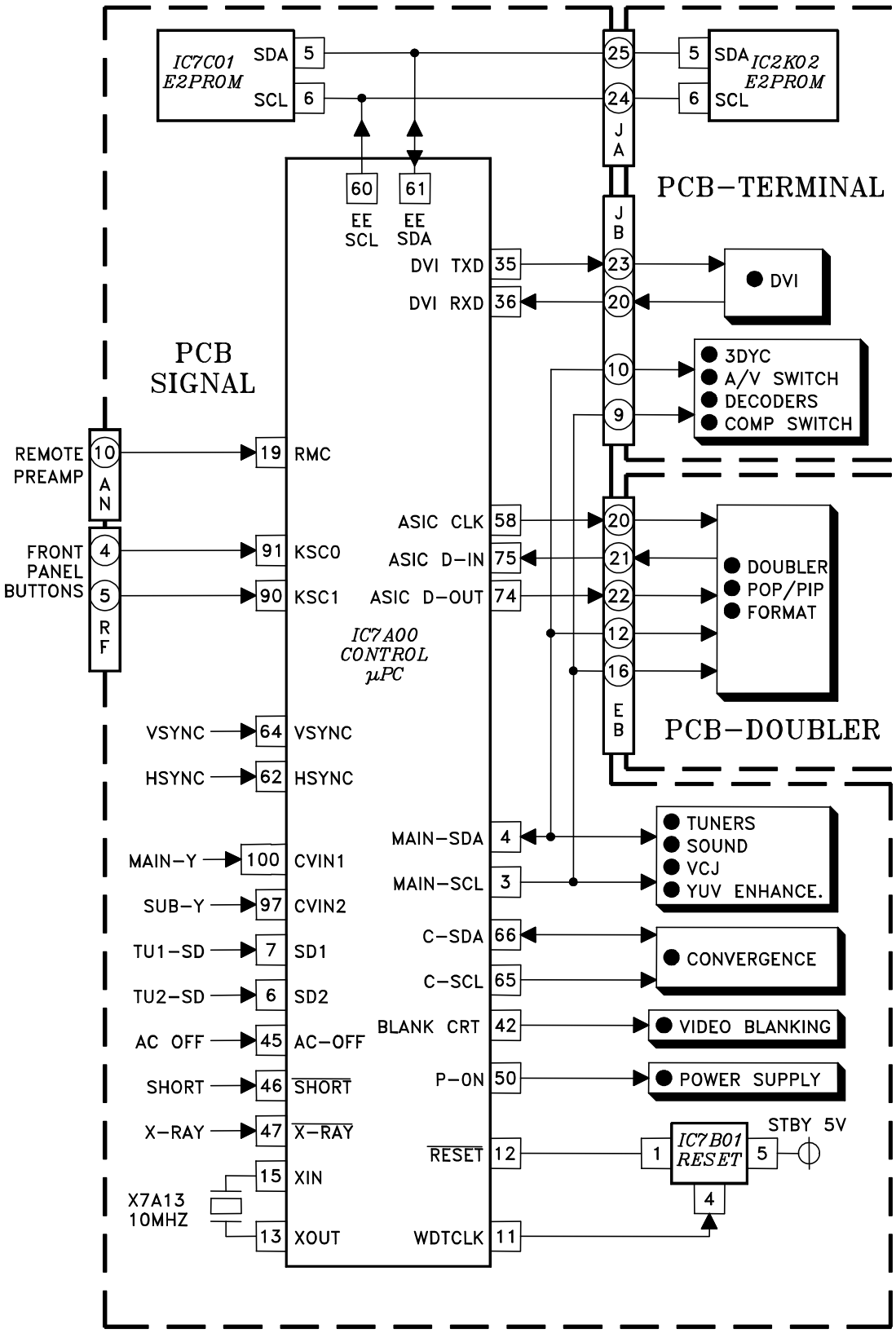
CONTROL CIRCUIT