Collins

INSTRUCTION BOOK

COMMUNICATIONS RECEIVER

51J-4

COLLINS RADIO COMPANY

COMMUNICATIONS RECEIVER

51J-4

INSTRUCTION BOOK

9th EDITION, 15 SEPTEMBER 1961

520-5014-00

©COLLINS RADIO COMPANY
1957, 1958, 1959, 1960, 1961

CEDAR RAPIDS, IOWA, U.S.A.

PRINTED IN THE UNITED STATES OF AMERICA

TABLE OF CONTENTS

Paragraph		Page
	SECTION 1 - GENERAL DESCRIPTION	
1.1.	GENERAL	1-1
1.1.1.	Purpose of Book	1-1
1.1.2.	Purpose of Equipment	1-1
1.1.3.	Description	1-1
1.1.4.	Equipment Supplied	1-2
1.1.5.	Accessories Available	1-2
1.2.	VACUUM TUBE TABLE	1-3
1.3.	REFERENCE DATA	1-3
	SECTION 2 - INSTALLATION	
2.1.	UNPACKING	2-0
2.1.1.	Procedure	2-0
2.2.	INSTALLATION	2-0
2.2.1.	General	2-0
2.2.2.	Antenna Connection	2-0
2.2.3.	Audio Output Connections	2-0
2.2.4.	I-F Output Connection	2-0
2.2.5.	Remote Standby Connections	2-0
2.2.6.	Power Connection	2-0
2.2.7.	Tubes.	2-0
2.2.8.	Fuse	2-2
	SECTION 3 - ADJUSTMENT AND OPERATION	
3.1.	ADJUSTMENT	3-1
3.1.1.	General	3-1
3.2.	OPERATION	3-1
3.2.1.	Function of Controls	3-1
3.2.2.	Tuning AM Signals	3-3
3.2.3.	Tuning Single-Sideband Signals	3-4
3.2.4.	Tuning CW Signals	3-4
3.2.5.	Frequency Measuring	3-5
3.3.	NOTES ON MECHANICAL FILTERS	3-5
3.3.1.	General	3-5
	SECTION 4 - CIRCUIT DESCRIPTION	
4.1.	MECHANICAL DESCRIPTION.	4-0
4.1.1.	Band Change	4-0
4.1.2.	Tuning	4-0
4.1.3.	Frequency Indication	4-3

SECTION 4 - CIRCUIT DESCRIPTION (CONT.)

Paragraph		Page
4.2.	ELECTRICAL DESCRIPTION	4-3
4.2.1.	General	4-3
4.2.2.	Radio Frequency Amplification	4-3
4.2.3.	Mixer Stages	4-5
4.2.4.	High Frequency Oscillator	4-5
4.2.5.	Variable Intermediate Frequency	4-7
4.2.6.	Variable Frequency Oscillator	4-7
4.2.7.	Crystal Filter	4-7
4.2.8.	Second Intermediate Frequency	4-9
4.2.9.	Detector	4-9
4.2.10.	Noise Limiter	4-9
4.2.11.	Automatic Volume Control	4-11
4.2.12.	Audio Amplifier	4-11
4.2.13.	50 Ohm I-F Output	4-11
4.2.14.	100 KC Calibrator	4-11
4.2.15.	Power Supply	4-12
4.2.16.	Beat Frequency Oscillator	4-12
4.2.17.	Mechanical Filter	4-12

SECTION 5 - MAINTENANCE

5.1.	INSPECTION	5-1
5.1.1.	General	5-1
5.1.2.	Routine Inspection	5-1
5.1.3.	Cleaning	5-1
5.1.4.	Vacuum Tubes	5-1
5.1.5.	Tube Replacement Precautions	5-1
5.1.6.	Tube Table	5-1
5.2.	TROUBLE SHOOTING	5-2
5.2.1.	General	5-2
5.2.2.	Fuses	5-2
5.3.	ALIGNMENT	5-2
5.3.1.	General	5-2
5.3.2.	Equipment and Tools Used for Alignment	5-2
5.3.3.	Crystal Oscillator Trimmer Adjustment	5-2
5.3.4.	100 KC Oscillator Alignment	5-3
5.3.5.	Fixed 500 KC I-F Amplifier Alignment	5-3
5.3.6.	Alternate BFO Alignment Method	5-5
5.3.7.	500 KC I-F Performance Measurements	5-5
5.3.8.	Alignment of Dials with VFO	5-6
5.3.9.	Variable I-F Alignment and RF Alignment Band 2	5-9
5.3.10.	Variable I-F Alignment and RF Alignment Band 3	5-9
5.3.11.	RF Alignment Bands 4-7	5-10
5.3.12.	RF Alignment Bands 8-15	5-10
5.3.13.	RF Alignment Bands 16-30	5-10
5.3.14.	RF Alignment Band 1	5-10
5.3.15.	VFO Alignment	5-10
5.3.16.	Adjustment of L-124	5-12
5.3.17.	Intermediate Amplifier Gain Adjustment	5-12

SECTION 5 - MAINTENANCE (CONT.)

Paragraph		Page
5.4.	COMPLETE VFO REMOVAL AND REPLACEMENT	5-12
5.5.	DIAL BULB AND STATIC DISCHARGE BULB REPLACEMENT	5-13
5.5.1.	Dial Bulb Replacement	5-13
5.5.2.	Static Discharge Bulb	5-13
5.6.	DIAL AND BAND CHANGE GEAR MAINTENANCE	5-13
5.6.1.	General	5-13
5.6.2.	Disassembly of Gear Box	5-13
5.6.3.	Reassembly of Gear Box	5-15
5.7.	RF TUNER ASSEMBLY MAINTENANCE	5-17
5.7.1.	General	5-17
5.7.2.	Positions of Cams	5-17
5.8.	DIAL CORDS	5-18
5.8.1.	Megacycle Pointer Cord	5-18
5.8.2.	Drum Cord	5-19

SECTION 6 - PARTS LIST

SECTION 7 - PARTS IDENTIFICATION AND SCHEMATIC

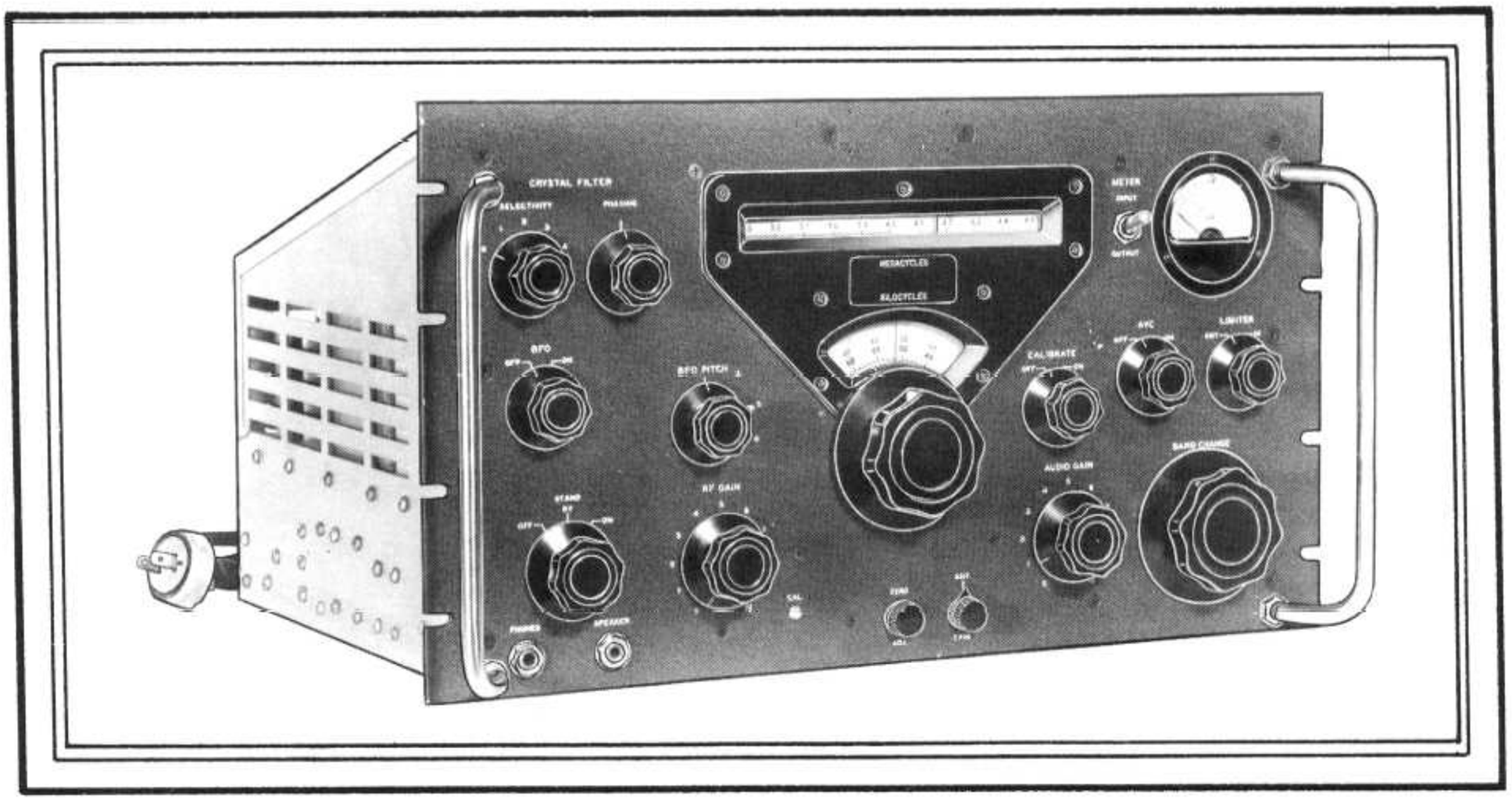

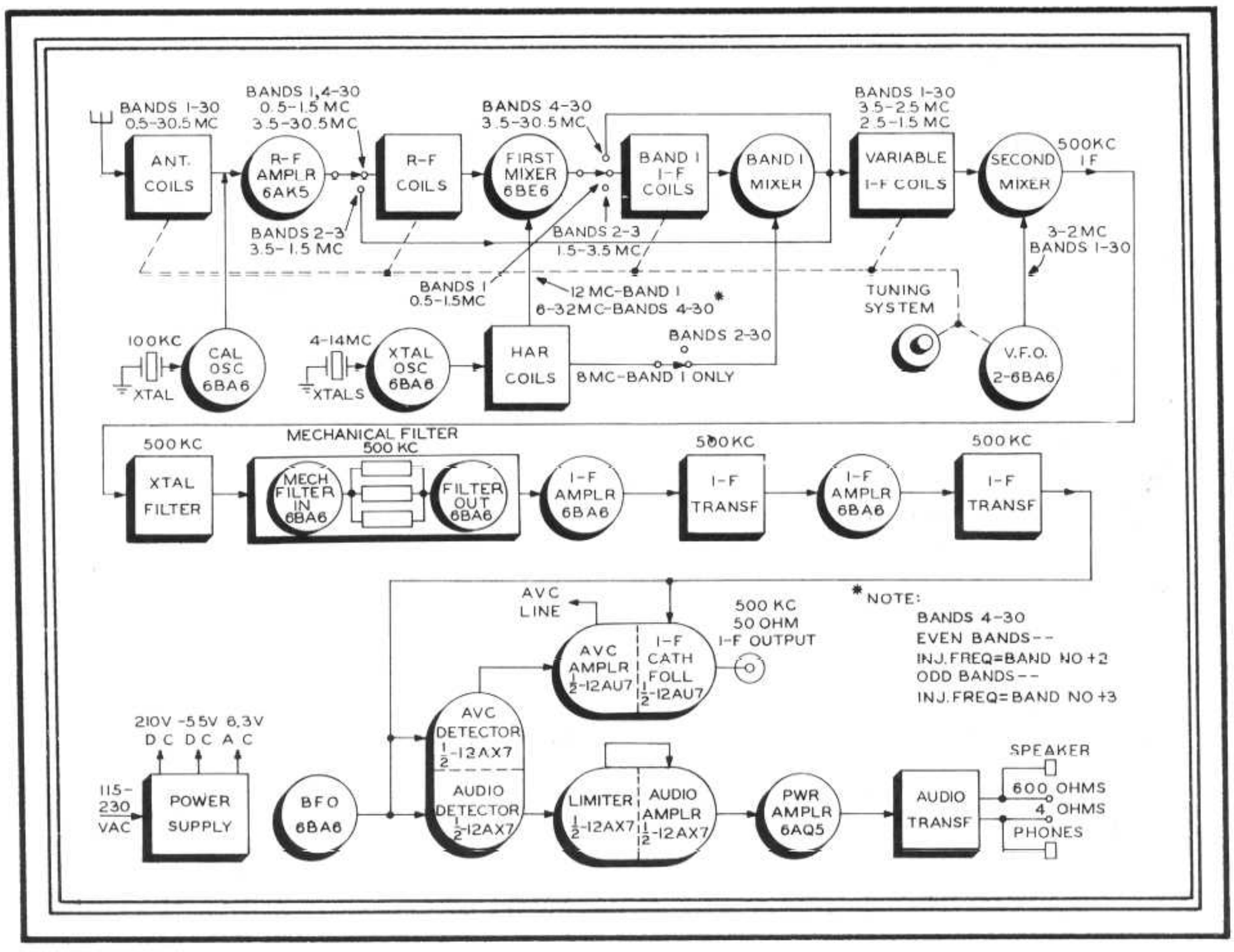

Figure 1-1. 51J-4 Receiver, Front View and Block Diagram

SECTION I
GENERAL DESCRIPTION

1.1. GENERAL.

1.1.1. PURPOSE OF BOOK. - This instruction book has been prepared to assist in the installation, operation and maintenance of the Collins Model 51J Radio Communications Receiver.

1.1.2. PURPOSE OF EQUIPMENT. - Collins 51J-4 Receiver is designed for communication applications where stability and dial accuracy of the highest order are the prime requisites. Under normal operating conditions, the receiver operates in the range of 540 kc to 30.5 mc with a total setting error and drift of less than 1 kc at any frequency within its range. The receiver is designed for amplitude-modulated and continuous wave reception, although its accuracy and stability make it suitable for many applications where it is desired to receive or set definite frequencies without searching or making frequent adjustments. This receiver incorporates the new mechanical filter in the intermediate frequency range to obtain the desirable rectangular-shaped passband.

1.1.3. DESCRIPTION.

(a) MECHANICAL. - The 51J-4 Receiver is available in two styles. One is a panel and shelf assembly suitable for mounting in a standard rack cabinet. Over-all panel dimensions are: width, 19 inches; height, 10-1/2 inches; and depth behind panel, 13-1/2 inches. A dust cover that fits over the top of the chassis is removable from the rear. The other assembly is in a cabinet suitable for table-mounting. Outside cabinet dimensions are: width, 21-1/8 inches; height, 12-3/8 inches and depth, 13-1/8 inches. Available on special order is a speaker that matches this cabinet. The speaker's dimensions are: width, 13 inches; height, 11 inches; depth, 7 inches. The speaker, the cabinet of the table-mounting assembly, and the front panel of the rack-mounting receiver are finished in St. James Gray wrinkle.

The following controls are located on the front panel:

R-F GAIN	CRYSTAL FILTER PHASING
AUDIO GAIN	OFF-ON-STANDBY
BFO ON-OFF	MEGACYCLE TUNING (BAND SWITCH)
CALIBRATE ON-OFF	KILOCYCLE TUNING
BFO PITCH	ZERO ADJ
AVC ON-OFF	METER OUTPUT-INPUT
LIMITER OUT-IN	CAL (100 K-C ADJUSTMENTS)
ANT. TRIM	FILTER SELECTOR
CRYSTAL FILTER SELECTIVITY	

The operating range of 540 kc to 30.5 mc is covered by 30 one-megacycle bands that are selected by the band switch knob and indicated by a slide rule dial having graduations of one-tenth megacycle (100-kc) intervals. The main tuning control covers each of these megacycle ranges with 10 turns of a 100 division dial calibrated at one-kilocycle intervals. The receiver's frequency stability is consistent with this finely divided calibration even at the highest frequencies.

A four-ohm headphone jack and a 600-ohm speaker jack are provided on the front panel. The antenna connector, 50-ohm i-f output connector, breakin relay terminals and four-ohm and 600-ohm audio output terminals are provided-on the rear. A heavy duty a-c power cord extends from the rear of the chassis.

(b) ELECTRICAL. - When advantageous, the Model 51J-4 Communications Receiver uses single, double, or triple conversion in tuning the entire frequency spectrum of 540 kc to 30.5 mc. Nineteen tubes, three of which are dual, are employed in the receiver. With the exception of the rectifier tube, all are of the miniature type.

The receiver r-f circuits tune from .5 to 30.5 mc, thus Band 1 is referred to as covering the range .5 to 1.5 mc. However, the lower end of the operating range is considered to be 540 kc rather than 500 kc because of the questionable operation in the extreme low end of the band where frequencies approach the receiver i-f frequency of 500 kc. Limited operation at the extreme low end is possible with somewhat reduced performance.

The frequency range of the 51J-4 Receiver, .5 to 30.5 mc, is divided into 30 one-megacycle bands by a system of switches and coils which form the r-f amplifier and first mixer circuits. Band changing consists of moving powdered iron "slugs" into the coils in one megacycle steps until inductance limits of the coils are reached, then changing coils and repeating. Injection voltage for the first mixer is obtained from the fundamental or harmonic output of an oscillator, the frequency of which is controlled

by one of ten quartz crystals selected by the MEGACYCLE band switch. The main tuning control is a vernier dial calibrated in 100 one-kilocycle divisions. This control operates through a differential mechanism to move the band change "slugs" in the coils enough to cover the range between the one-megacycle band change steps. Thus the Band Switch selects coils and crystals and also roughly positions the tuning slugs. At the same time one of the two ranges (1.5 to 2.5 mc or 2.5 to 3.5 mc) of the variable i-f channel is selected and tuned along with the r-f coils.

The crystal frequencies for the first mixer injection are so chosen that the frequency produced by the first mixer will always fall in the 1.5 to 2.5 mc or 2.5 to 3.5 mc range of the variable i-f channel.

Exceptions to the operation just described are bands 1, 2, and 3. Band 1 (.5 to 1.5 mc) uses an intermediate mixer between the first mixer and the variable i-f coils. This mixer accepts frequencies in the range 10.5 to 11.5 mc from the first mixer. A 12-mc signal developed by the crystal controlled oscillator is applied to the first mixer to determine these frequencies. The crystal controlled oscillator also applies an 8-mc voltage to the intermediate frequency mixer to produce a signal within the range of the variable frequency i-f coils which tune the 2.5 to 3.5 mc spectrum. Bands 2 and 3, which cover 1.5 to 2.5 mc and 2.5 to 3.5 mc respectively, are identical in span to each band of the variable i-f coils and thus feed through to the second mixer without utilizing the first mixer.

Following the variable i-f and the second mixer are the crystal filter and a four stage fixed intermediate frequency amplifier containing mechanical filters. Conversion to the fixed i-f of 500 kc is accomplished by injecting a 2 to 3 mc signal from a Collins 70E-15 oscillator to produce a difference of 500 kc from the frequency existing in either band of the variable i-f amplifier. Tuning of the 70E-15 oscillator is done by the "kilocycle" tuning control in step with all other circuits.

Stability of the 70E-15 oscillator is assured by temperature-compensated components operating in a sealed and moisture-proof housing.

Separate rectifiers are used to produce automatic volume control and audio voltages. D-c amplification of the automatic volume control voltage is provided to obtain essentially uniform input to the detector. Audio power output is held within 3.5 db over signal input voltage ranges of five to 125,000 microvolts at the antenna terminals. A series type noise limiter clips modulation at 50-85 percent. This allows good reception in the presence of strong noise pulses.

1.1.4 EQUIPMENT SUPPLIED. - The following table lists the equipment supplied.

TYPE	DESCRIPTION	COLLINS PART NUMBER
51J-4	Radio receiver complete with tubes, dust cover for rack mounting, and one mechanical filter to be selected from list below.	522-0144-096
	OR	
51J-4	Radio receiver mounted in cabinet complete with tubes, dust cover, and one mechanical filter to be selected from list below.	522-0144-086
	Instruction Book for 51J-4	520-5014-00

1.1.5 ACCESSORIES AVAILABLE. - The following table lists the accessory equipment available for the 51J-4.

TYPE	DESCRIPTION	COLLINS PART NUMBER
270G-3	Matching speaker (desk mounted)	522-0149-00
271B-3	Dual speaker (rack mounted) Panel space required is 7 inches.	522-8123-004
271B-4	Single speaker (rack mounted) Panel space required is 7 inches.	522-8350-002
	Cabinet for 51J-4 complete with mounting hardware.	505-5959-003
	Set of spare tubes for 51J-4	541-1619-002
F500B-08	800-cycle plug-in filter for 51J-4	526-9007-00
F500B-14	1400 cycle plug-in filter for 51J-4	526-9030-00
F500B-31	3100 cycle plug-in filter for 51J-4	526-9008-00
F500B-60	6000 cycle plug-in filter for 51J-4	526-9009-00
	Headphones, 600 ohm	273-0003-00

1.2. VACUUM TUBE TABLE.

The following table lists the tubes employed in the ciruits just described.

SYMBOL DESIGNATION	TUBE TYPE	FUNCTION
V101	6AK5	Radio-frequency amplifier
V102	6BE6	First mixer
V103	6BE6	Band 1 mixer
V104	6BA6	Calibration oscillator
V105	6AK5	High-frequency crystal oscillator
V106	6BE6	Second mixer
V301	6BA6	First 500 kc i-f amplifier
V302	6BA6	Second 500 kc i-f amplifier
V108	6BA6	Third 500 kc i-f amplifier
V109	6BA6	Fourth 500 kc i-f amplifier
V110	12AX7	Detector and AVC rectifier
V111	12AU7	AVC amplifier and i-f output cathode follower
V112	12AX7	Noise limiter and first audio amplifier
V113	6AQ5	Audio power amplifier
V114	6BA6	Beat-frequency oscillator
V115	5V4	Power rectifier
V116	0A2	Voltage regulator
V001	6BA6	Variable-frequency oscillator
V002	6BA6	Oscillator isolation amplifier

1.3. REFERENCE DATA.

OPERATING RANGE: 540 kc to 30.5 mc
TYPE OF RECEPTION: AM, CW or MCW
CALIBRATION: Direct reading in megacycles and kilocycles
TUNING: Linear tuning with uniform bandspread
FREQUENCY STABILITY: Dial calibration at room temperature is within 300 cps if the nearest 100 kc calibration point is used to adjust the fiducial.
TEMPERATURE RANGE: -20°C to +60°C
SENSITIVITY: Band 1 - Less than 15 uv gives 10 db s/n
Bands 2 to 30 - Less than 5 uv gives 10 db s/n
SELECTIVITY: A complete chart of selectivity characteristics is given in paragraph 5.3.7. of this book.
SPURIOUS FREQUENCY RESPONSE: Down at least 40 db
AUTOMATIC VOLUME CONTROL: Less than 8 db increase in audio power output with an increase in r-f signal from 5 to 500,000 uv
S-METER: Meter calibrated in 20, 40, 60 db above AVC threshold and -10 to +6 db audio level with 6 mw as reference
NOISE LIMITER: Series type ahead of the first audio stage
AUDIO POWER OUTPUT: Band 1 - at least 0.5 watt for 15 uv signal
Bands 2 to 30 - at least 0.5 watt for 5 uv signal
AUDIO FREQUENCY RESPONSE (Overall): ±3 db from 200 to 2500 cps when 6 kc filter is used
AUDIO DISTORTION: Less than 10 percent at 0.5 watt output
AUDIO OUTPUT IMPEDANCE: 4 and 600 ohms
I-F OUTPUT IMPEDANCE: 50 ohms
R-F INPUT IMPEDANCE: Designed to operate into a high impedance whip or single-ended antenna
POWER REQUIREMENTS: 85 watts at 115 volts 45/70 cps. Same power required when reconnected for 230 volt 45/70 cps operation
DIMENSIONS: Panel - 10-1/2 inches high, 19 inches wide, notches for standard rack mounting
WEIGHT: 43 pounds

SECTION II
INSTALLATION

2.1. UNPACKING.

2.1.1. PROCEDURE. - Collins 51J-4 receiving equipment is packed in a number of heavy cartons. Refer to the packing slip for a list of all equipment supplied on the order. Open cartons carefully to avoid damaging the contents. Remove the packing material, and carefully lift the units out of the cartons. Search all packing material for small parcels. Extra pilot light bulbs and fuses are supplied with each equipment. Inspect each unit for loose screws and bolts. Make sure that all controls such as switches and dials work properly. All claims for damage should be filed promptly with the transportation company. If a claim is to be filed, the original packing case and material must be preserved.

2.2. INSTALLATION.

2.2.1. GENERAL. - The receiver should be mounted in a standard rack. Outline and mounting dimensions are given in figure 2-1. The front panel is slotted for mounting at 1-1/2, 3-3/4, 6-3/4 and 9 inches from the bottom. Panel height is 10-1/2 inches and panel width is 19 inches.

When choosing a position for the receiver, give consideration to convenience of power, antenna and ground connections, to placement of cables and to convenience in servicing the equipment. Rear panel connections are shown in figure 2-2.

2.2.2. ANTENNA CONNECTION. - Connect a cable from a high impedance whip or a single-ended antenna to antenna jack J101 on rear panel. If the receiver is to be operated near a powerful transmitter, the r-f input circuit should be protected by connecting break-in relay K101 to operate when the transmitter is radiating. Break-in relay connections are described in paragraph 2.2.5. below.

2.2.3. AUDIO OUTPUT CONNECTIONS. - Two audio output jacks are located on the front panel. One is designated PHONES and the other SPEAKER, their output impedances being 4 and 600 ohms respectively. An audio output terminal strip is provided on the rear panel. Terminal G is a ground connection and terminals 4 and 600 are audio outputs of 4 and 600 ohms impedance respectively. Terminal 600 is connected in parallel with the PHONES jack, and terminal 4 is connected in parallel with the SPEAKER jack. Use these output jacks and terminals as required.

2.2.4. I-F OUTPUT CONNECTION. - A 100-200 millivolt, 50 ohm 500 kc i-f output is available at coaxial jack J104 on the rear panel.

2.2.5. REMOTE STANDBY CONNECTIONS. - Break-in relay connections are available at terminal strip E101 at the rear of the chassis. Terminals are marked 1, 2 and 3. Terminal 1 is connected to receiver ground. Terminals 2 and 3 are connected to the break-in relay coil, which is rated at 12 v d-c nominal and 135 ohms d-c resistance. During operation, terminals 2 and 3 are usually connected in series with a source of voltage and a set of normally open contacts on the carrier control relay of a transmitter in order to silence the receiver during transmission. When the break-in relay coil is energized, one pair of contacts shorts the antenna to ground; another pair, connected in series with a section of the OFF-STANDBY-ON switch, removes plate voltage from the three i-f amplifier stages. In STANDBY position, the OFF-STANDBY-ON switch also removes plate voltage from the i-f stages. See figure 2-3.

2.2.6. POWER CONNECTION. - Make power connection by using the rubber - covered cord that is permanently attached at the rear of the chassis. This cord is six feet long and is equipped with a standard a-c plug. The power source must supply 85 watts at 115 volts, 45/70 cps. If 230 volt operation is desired, reconnect transformer T108 by removing the jumpers between terminals 2 and 4 and between 1 and 3; then connect a jumper between terminals 2 and 3.

2.2.7. TUBES. - Before turning on the equipment for the first time inspect the tubes. Be sure that they are in their correct positions, and that they are firmly seated in their sockets.

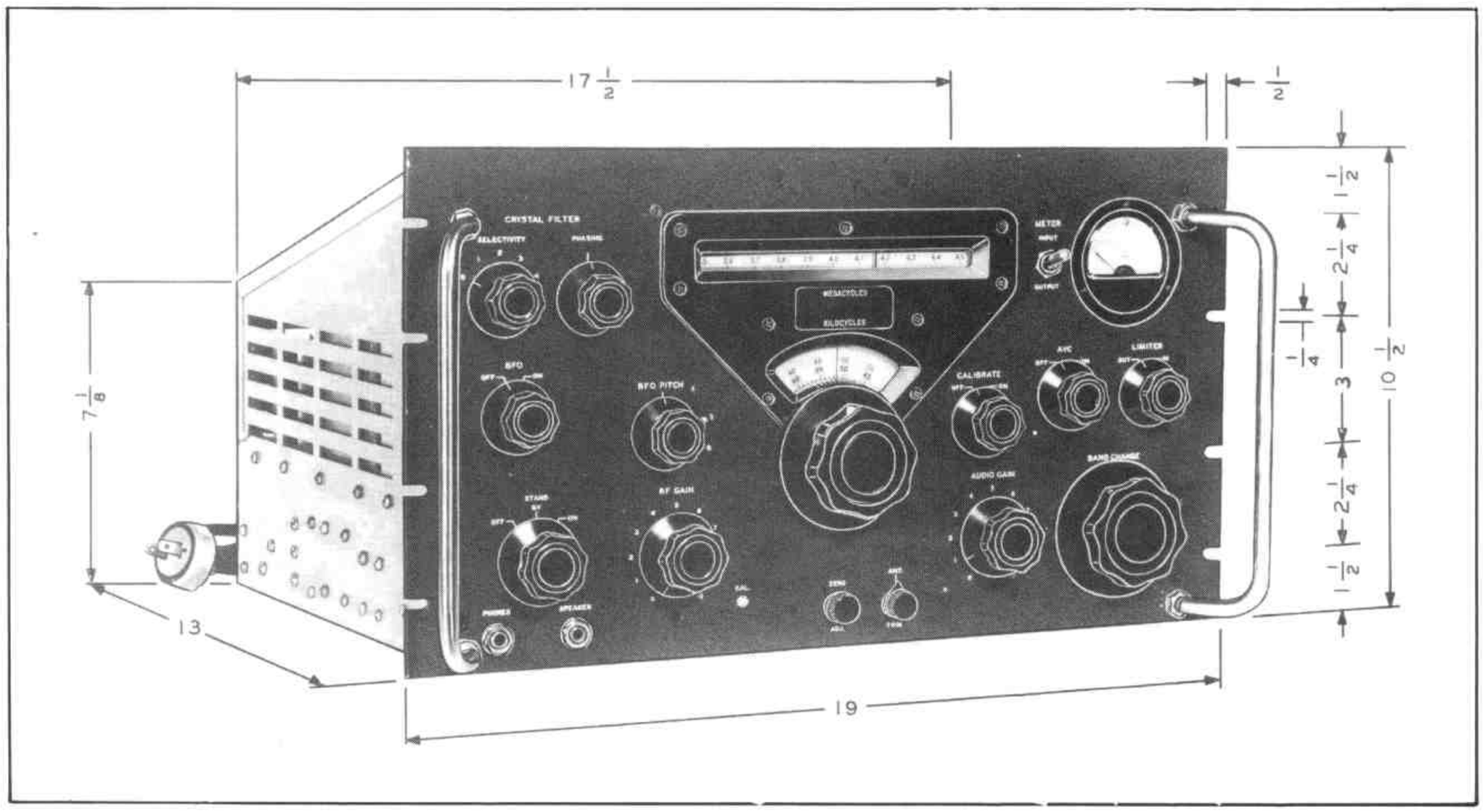

Figure 2-1. 51J-4 Mounting Dimensions

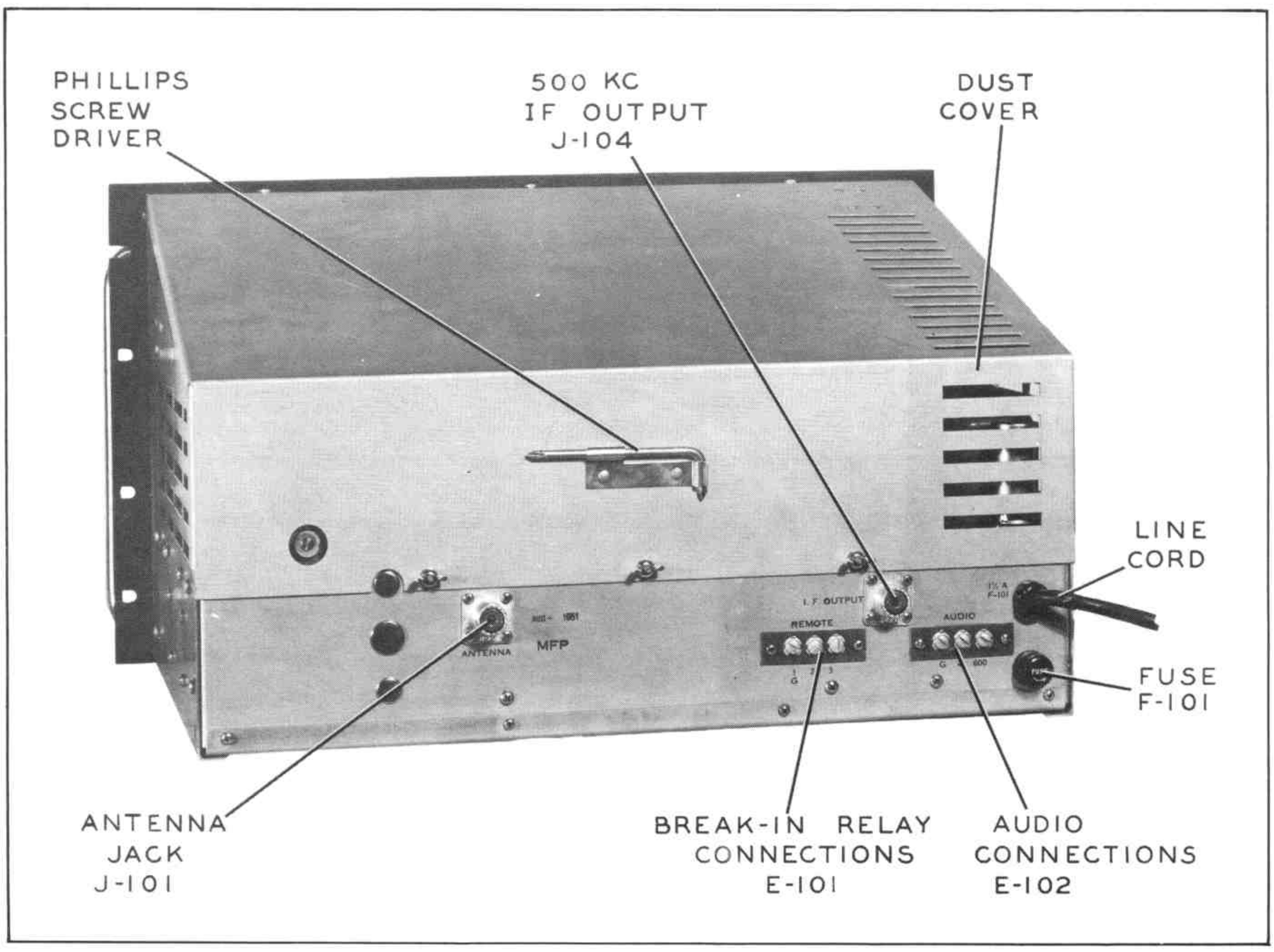

Figure 2-2. 51J-4 Rear Connections

2.2.8. FUSE. - The fuse is located on the rear of the chassis. It can be removed for inspection by turning the cap of the fuse post to the left and pulling straight up until the cap and fuse come free. This fuse should be the slow-blow type, with a rating of 1.5 amperes.

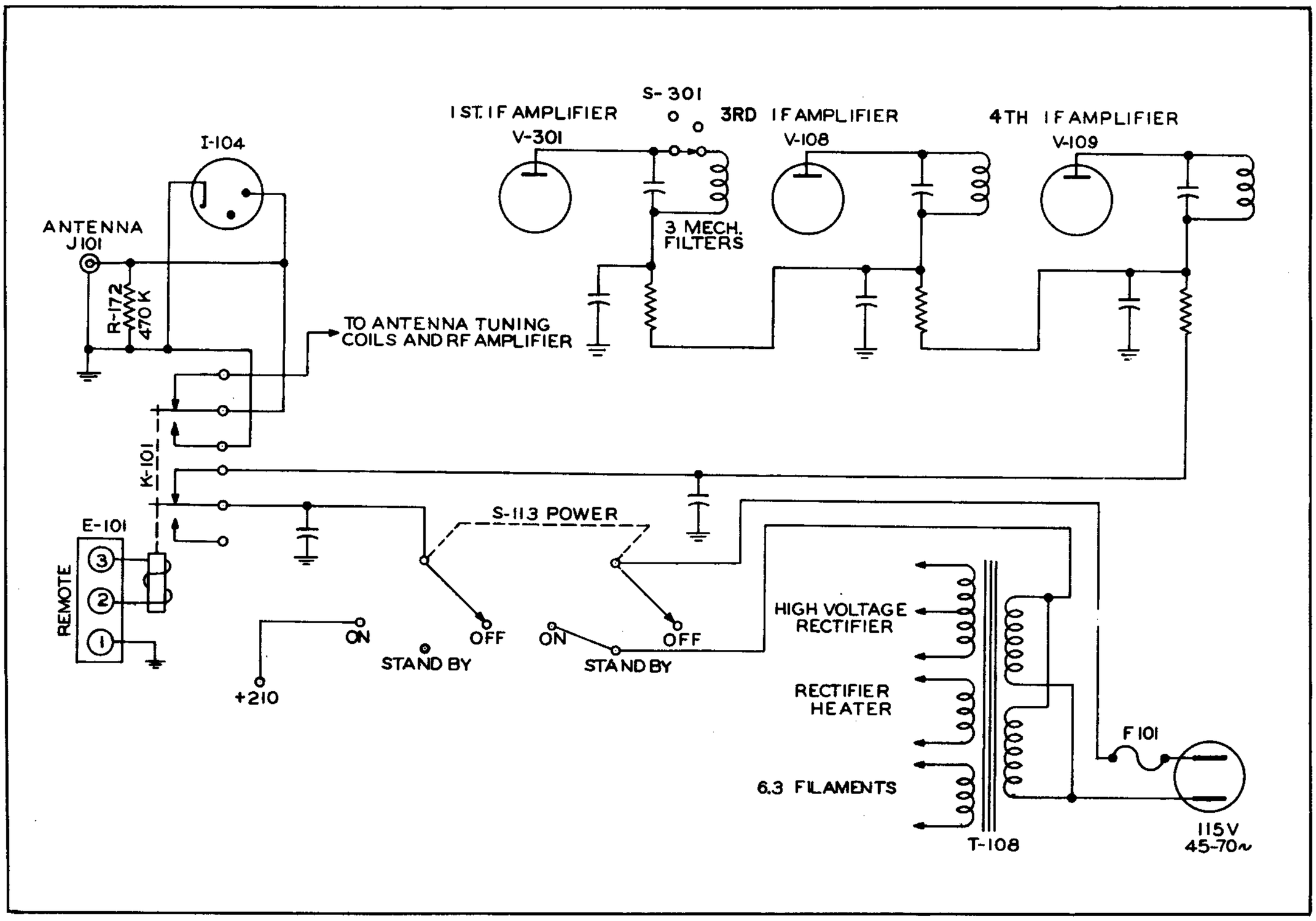

Figure 2-3. 51J-4 On-Off-Standby Functions and Remote Operation Relay Circuit

SECTION III
ADJUSTMENT AND OPERATION

3.1. ADJUSTMENT.

3.1.1. GENERAL. - Other than zeroing the S meter no preoperational adjustments are necessary. Should the S meter require zeroing, turn the receiver ON, BFO OFF, AVC ON, and the 100 KC CRYSTAL OFF; then turn the RF GAIN fully clockwise. Short the antenna terminals; then turn the meter zeroing control until the S meter reads zero. Refer to figure 5-1 for location of this control.

3.2. OPERATION.

3.2.1. FUNCTION OF CONTROLS. - Operation of the 51J-4 Receiver is exceedingly simple if the functioning of the controls is understood. The following paragraphs explain the functions of the controls on the receiver's front panel.

(a) OFF-STANDBY-ON. - In the OFF position, this control opens the primary power circuit to turn the equipment completely off. In the STANDBY position the power transformer is excited, thus producing filament voltage for all stages and plate voltage for all except three i-f amplifier stages. In the ON position the receiver is completely operative.

(b) RF GAIN. - The RF GAIN control is located in the grid return circuit of the avc controlled tubes and is operative at all times. It varies the amount of fixed bias placed upon the grids of these tubes.

(c) AUDIO GAIN. - The AUDIO GAIN control is located in the grid circuit of the first audio amplifier and is operative at all times. It varies the amount of a-f signal applied to the grid of this tube, and thereby controls the amount of audio power produced by the receiver.

(d) BAND CHANGE. - Any one of the 30 bands may be selected by 1/2 revolution intervals by means of this knob. A stiff detent accurately positions the controlled switches on each band.

(e) MEGACYCLE. - The MEGACYCLE scale is on the slide-rule type dial. It is calibrated in ten 100 kc divisions, each of which equals one full turn of the circular KILOCYCLE dial. The 1.5 to 2.5 mc and 2.5 to 3.5 mc bands are printed in red, indicating that the red scale on the KILOCYCLE dial must be used when operating on these bands. The pointer on the MEGACYCLE dial is operated by the KILOCYCLE control while the scale is changed by operation of the BAND CHANGE control.

(f) KILOCYCLE. - The KILOCYCLE dial is the main tuning control on the 51J-4 receiver. Each division on its circular face represents one kilocycle. One full turn of the dial tunes the receiver through 100 kilocycles, or one division of the MEGACYCLE scale. To read the tuning dials, merely combine the figures of the MEGACYCLE dial with those of the KILOCYCLE dial, thus arriving at the frequency in kilocycles. For example, a reading of 14.1 on the MEGACYCLE dial and of 78 on the KILOCYCLE dial indicates a frequency of 14178 kc. The KILOCYCLE scale for the 1.5 to 2.5 and 2.5 to 3.5 mc bands is in reverse order to the scale for the rest of the bands, and is printed in red similar to corresponding scales on the MEGACYCLE dial.

(g) ZERO ADJ. - The ZERO ADJ moves the indicator line on the KILOCYCLE control a few divisions in either direction for calibration purposes. The receiver may be calibrated against either any receivable station whose frequency is known or the internal calibration oscillator. This oscillator emits a harmonic every 100 kc in the tuning spectrum. An example of how the receiver may be calibrated using this oscillator follows. If the desired signal is about 14100 kc, turn the 100 KC CRYSTAL ON and the BFO ON with BFO PITCH control at panel mark. Next, using the KILOCYCLE knob, tune to zero beat with the 100 kc marker at 14100 kc. Then move the ZERO ADJ control until the hair line is exactly on 14100 kc. The dial reading in this region is now very accurate, and the receiver may be set within a few hundred cycles of the desired frequency.

A ten division scale (five divisions either side of center) is engraved on the lower edge of the escutcheon opening for the KILOCYCLE dial and is

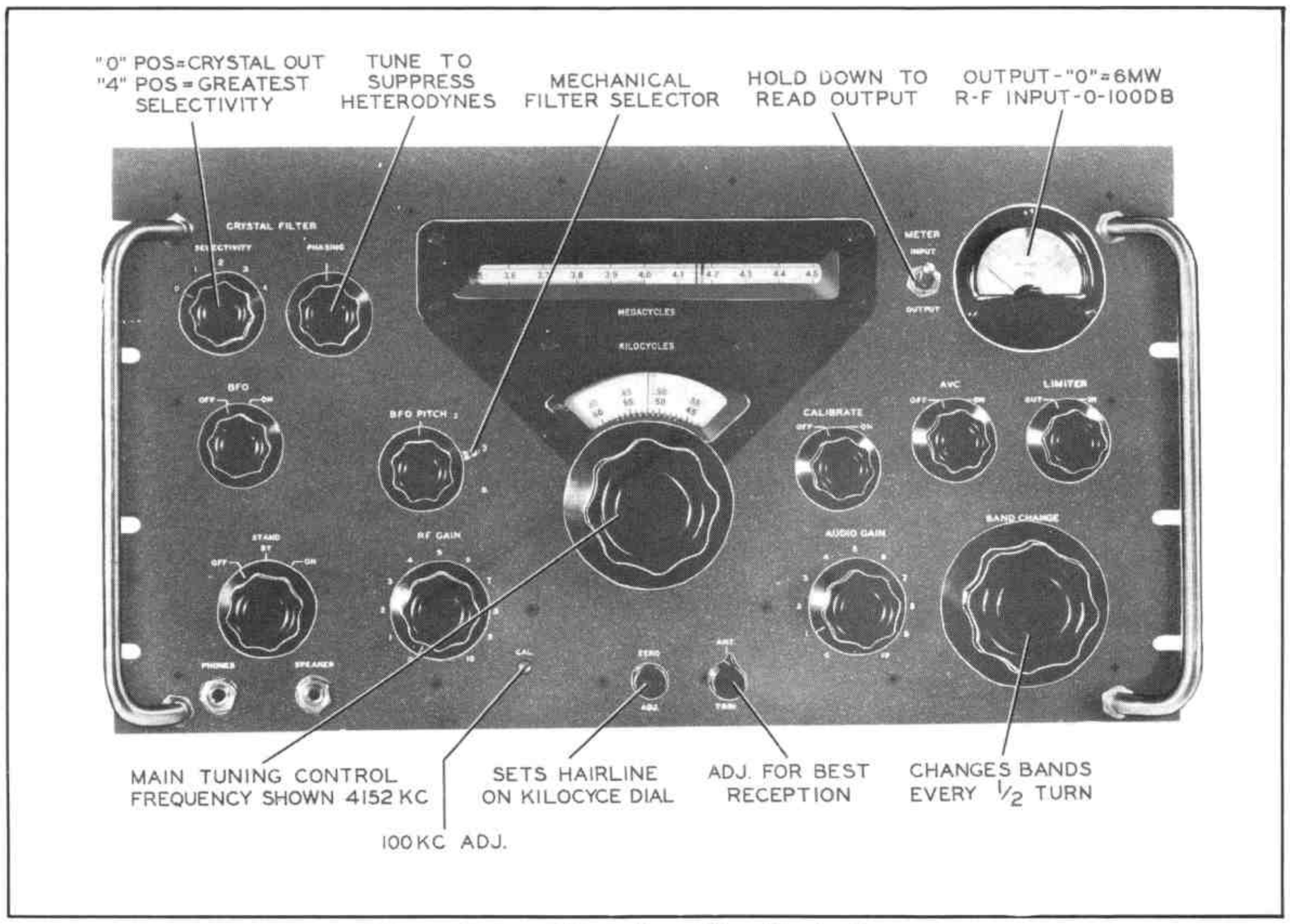

Figure 3-1. 51J-4 Operating Controls

used to log the calibrated position of the hair line on the various bands in lieu of recalibrating each time the band is used.

NOTE

WHEN READING THE FREQUENCY OF AN INCOMING SIGNAL, THE BFO PITCH CONTROL MUST BE LEFT IN THE SAME POSITION AS IT WAS WHEN THE RECEIVER WAS CALIBRATED.

(h) METER INPUT-OUTPUT. - The METER switch is a momentary spring-return type toggle switch. In the normal or INPUT position the meter is connected as an S meter. In the OUTPUT position, the meter is connected in the audio output circuit as a db meter.

(i) BFO OFF-ON. - In the ON position this control turns ON the beat frequency oscillator for CW reception. In the OFF position, it grounds the screen grid of the BFO tube.

(j) BFO PITCH. - The BFO pitch control varies the frequency of the beat frequency oscillator to change the pitch of the audio tone which is produced by combining the BFO signal with the incoming signal. A range of about ±3 kc minimum can be obtained with this control.

(k) CALIBRATE OFF-ON. - This switch is in the cathode circuit of 100 kc crystal oscillator tube V104 and turns the 100 kc oscillator ON or OFF. For an explanation of how to use the oscillator, see paragraph (g) above.

(l) AVC OFF-ON. - This switch turns AVC ON or OFF. In most cases AVC should be ON for both AM and CW reception, but may be turned OFF for CW reception if desired.

(m) LIMITER OUT-IN. - The noise limiter is useful for both AM and CW reception. When noise is not a problem, turn the LIMITER to OFF, as the distortion will be less in this position. When noise of the impulse type is being received, turn the LIMITER to ON. Adjustment of RF and AF gain controls is necessary for best CW noise limiting.

(n) CRYSTAL FILTER.

SELECTIVITY. - In position 0 of this control, the crystal filter is not used and selectivity is determined by the receiver's tuned circuits alone. In position 1 through 4, the crystal filter is in the

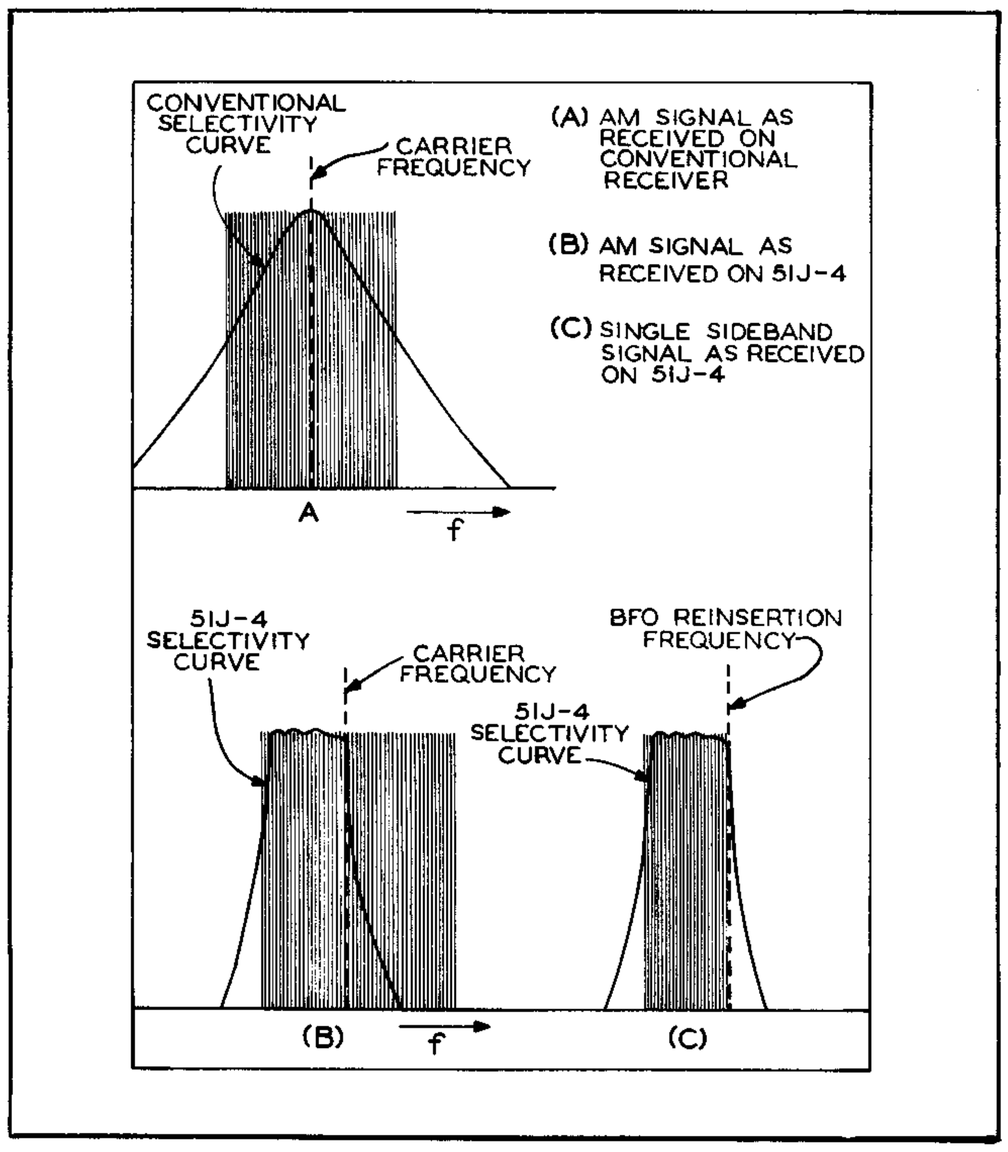

Figure 3-2. Tuning (A) a Conventional Receiver; (B) and (C) the 51J-4 using the 3KC Mechanical Filter

circuit, the selectivity being increased as position 4 is approached. Position 4 gives a bandwidth of about 200 cps at 6 db down.

PHASING. - The PHASING control is used to reject unwanted heterodynes. When positioned on the panel mark, the control is properly set for crystal phasing with no rejection notch. If a high frequency heterodyne is interferring with reception, move the control back and forth near the panel mark until the heterodyne is attenuated. If the heterodyne is of lower frequency, move the control farther to left or right of the panel mark. This control will attenuate heterodynes ranging from 1 to 3 kc.

(o) METER. - The tuning meter is calibrated in 20, 40, 60, 80 and 100 db above AVC threshold when reading r-f input. When reading audio output, the meter is calibrated from -10 to +6 db, zero reference being 6 milliwatts into a 500 ohm load.

(p) CAL. - If supreme accuracy is desired, the frequency of the 100 kc oscillator should be checked against WWV or some other station whose frequency is known to be extremely accurate. This oscillator frequency may be varied through small limits by turning the CAL control with a screw driver. Additional range can be obtained by turning C169, located just behind the 100 kc crystal.

(q) FILTER SELECTOR. - If the receiver is equipped with the complete complement of three mechanical filters, position 1 selects the 1.4 kc filter, position 3 selects the 3.1 kc filter and position 6 selects the 6 kc filter.

3.2.2. TUNING AM SIGNALS.

Conventional tuning is employed when using the 6 kc mechanical filter, however, when using the 3 kc filter, the tuning techniques differ somewhat. Because of the flat top and almost vertical sides of the pass band of the 3 kc filter it is possible to tune either sideband of an AM station and reject the opposite sideband. Tuning "on the nose" results in loss of the high frequency audio components with, in most cases, a loss of intelligibility. Select the sideband that contains the least objectionable adjacent channel interference. See figure 3-2(B). When the 3 kc filter is employed, use the following procedure to tune AM signals:

(a) Set up for AM reception: Power ON; operate BAND CHANGE switch to desired band; BFO to OFF; LIMITER to OUT; selectivity to O; AVC to ON; select 3 kc mechanical filter; RF GAIN maximum-use AUDIO GAIN for volume control.

(b) Tune in AM station - move dial slowly.

(c) Adjust ANT. TRIM for maximum "S" meter reading - (one setting for each new band usually sufficient).

(d) Tune toward one side of the carrier being received until "S" meter reading drops sharply. Then carefully tune into the signal again until the "S" meter reading increases to its former value and the modulation is readable. The receiver is now tuned to one sideband plus the carrier of the AM station. If heterodyne interference is strong, tune to the other side of the signal and listen to the opposite sideband.

(e) If noise is severe, turn the LIMITER switch to IN.

(f) If heterodyne interference is bad on both sidebands, tune to the better sideband and turn the SELECTIVITY control to 1. Operate the CRYSTAL FILTER PHASING control over its entire range (90° either side of center position) to find the position at which the heterodyne is weakest. With any crystal filter there are some frequencies that cannot be phased out. In the 51J-4 these occur at between 800 and 1200 cps. Generally speaking, turning the SELECTIVITY control any higher in AM reception

will not give an over-all gain in results because of the loss in audio frequencies.

3.2.3. TUNING SINGLE-SIDEBAND SIGNALS.

The 51J-4 is used for single sideband reception in much the same manner as is any other communications receiver. The transmitted signals carrier must be reinserted at the receiver, of course, and in the 51J-4, this is done by turning on the BFO. Before attempting to receive single sideband signals, calibrate the BFO following the procedure in paragraph (a) below. After the BFO has once been calibrated it will only be necessary to recalibrate as component aging or extreme temperature variations cause the BFO frequency to shift.

(a) Calibrating the BFO. Calibrating the BFO makes it possible to set the receiver up for single sideband reception with minimum delay thereafter. It, in effect, establishes the correct point in the receivers passband at which the carrier is being reinserted. See figure 3-2(B). We calibrate for both upper and lower sideband operation.

(1) Set up for AM reception but do not turn on the crystal filter. (POWER ON; operate BAND CHANGE to desired band; BFO to OFF; AVC to ON; AUDIO GAIN maximum - use RF GAIN for volume control; use 3 kc filter).

(2) Turn the CALIBRATE switch to ON and tune to the exact center of the signal (the "S" meter is helpful here). Turn on the BFO. If the BFO is correctly adjusted the zero beat should occur at or very near the center position of the BFO PITCH knob. Turn the BFO off.

(3) It has been determined that for best results, the reinserted carrier (BFO signal) should be placed 18 to 20 db down on the filter skirt. The point to set the BFO can be found by the following method: Tune in a signal of approximately S-9 either from the calibrator at one of the calibrator check points or from a signal generator. Tune the receiver dial below the signal until the S-meter has dropped 3-S units (18 db). Turn the BFO switch to ON. Increase the audio gain and decrease the RF gain to prevent overloading. Zero beat the bfo with the front panel BFO PITCH control. Note the position of the BFO PITCH knob.

(4) Return the receiver controls for AM reception, tune the receiver dial above the input signal until the S-meter shows a decrease of 3-S units on this side of the filter curve. Again return to CW reception, zero beat the BFO PITCH and note the knob position.

(b) Set up for single-sideband reception: Power ON; operate BAND CHANGE to desired band; BFO to ON; LIMITER to OUT; SELECTIVITY to O; AVC to OFF; use 3 kc filter maximum - use RF GAIN for volume control.

(c) Adjust ANT. TRIM for maximum background noise.

(d) Tune to S.S.S.C. station with RF GAIN at low setting to prevent overload. (There is no avc now.)

(e) Turn the BFO PITCH control counterclockwise to the left hand position mark as determined in step (a).

(f) Very carefully adjust the main tuning dial until the S.S.S.C. signal becomes readable. This may take considerable patience the first few times because tuning to an S.S.S.C. station is more critical than tuning for AM signals. Do not adjust the BFO PITCH after it is once set - rather, make all tuning adjustments with the main tuning dial. If the signals cannot be made readable, set the BFO PITCH to the clockwise mark and again carefully adjust the main tuning dial.

(g) Advance the RF GAIN to suit.

(h) If heterodyne interference is severe, turn the SELECTIVITY control position 1 and adjust the crystal filter PHASING control to "notch out" the interferring signal, as described in paragraph 3.2.1. (n), of this section.

3.2.4. TUNING CW SIGNALS.

The extreme selectivity of the 51J-4 Receiver makes single-signal reception an inherent feature of the set. However, because of the selectivity, careful tuning and special techniques are in order. Best single-signal reception is with the BFO PITCH set to produce a 1000 cps peak note when using the 3 kc filter.

(a) Set up for CW reception: Power ON; operate BAND CHANGE to desired band; BFO to ON; SELECTIVITY to O; LIMITER to OUT; AVC to OUT: AUDIO GAIN maximum - use RF GAIN for volume control.

(b) Adjust BFO PITCH to approximately 1/4" off the index mark.

(c) Adjust ANT. TRIM for maximum background noise.

(d) Tune in a cw station. Carefully adjust the main tuning control for the loudest signal.

(e) Adjust the BFO PITCH control to the desired pitch.

(f) If interference is present try tuning to zero beat with the interference while at the same time retaining an audible beat note with the desired signal.

(g) If the results of step f. are unsatisfactory, turn the BFO PITCH control to the other side of center and repeat step f.

(h) If steps f. and g. do not produce satisfactory reception, plate the SELECTIVITY in positions 1-2-3 or 4, as required, and carefully retune the main tuning control. When greatest audio output is reached, move the PHASING control slowly out each side from center and try to phase out the interfering signal. If adjacent signals are no problem, leave the PHASING control in center position for minimum background hiss.

(i) Further selectivity can be gained by switching in the 1 kc filter on receivers so equipped. The tuning procedures are the same except that the BFO PITCH control must not be set so far out. When searching for signals it is usually better to use the 3 kc filter and have the crystal filter out, i.e. SELECTIVITY control in the O position.

3.2.5. FREQUENCY MEASURING.

For AM and single-sideband reception using the 3 kc filter the 51J-4 dial reading will not necessarily correspond to the carrier frequency of the station being received. Depending upon whether the upper of lower sideband is tuned, the actual carrier frequency will be approximately 1.5 kc lower or higher than the dial reading indicates. For CW reception, if the CW station is properly tuned, the dial reading should correspond to the carrier frequency. More accurate frequency measuring procedures are outlined below.

(a) Calibration: Frequency readings will be more accurate if the calibrator is used to calibrate the dial before frequency measurements are made. To use the calibrator, set up for CW reception (paragraph 3.2.4.(a) of this section), tune to the 100-kc point nearest the frequency to be measured, set the BFO PITCH control to center position, and turn on the calibrator. Zero beat the calibrator signal, using the main tuning control. Adjust the ZERO ADJ knob so that the dial marker lines up with zero on the KILOCYCLE dial. Turn off the calibrator.

(b) To measure the carrier frequency of an AM station, turn the SELECTIVITY control to 4, tune the station for maximum "S" meter reading, and read the frequency on the tuning dial.

3.3. NOTES ON MECHANICAL FILTERS.

3.3.1. GENERAL. - Certain characteristics of the mechanical filter must be considered when choosing the filter best suited for the reception conditions of each signal.

(a) Selective fading may be more noticeable when receiving AM on just one sideband. If selective fading is bad but adjacent channel interference is not, choose the 6 kc filter and tune the signal at the center of the passband.

(b) When using the 3 kc filter and one sideband for reception, there is an inherent 6 db loss in detector sensitivity due to detecting only one sideband; however, 3 db is picked up because of using a narrower bandwidth. Thus there is a net loss of 3 db in sensitivity. On weak signals it may be better to choose the 6 kc filter and tune "on the nose" except in event of adjacent channel interference, in which case the 3 kc filter may still be the best choice.

SECTION IV
CIRCUIT DESCRIPTION

4.1. MECHANICAL DESCRIPTION.

4.1.1. BAND CHANGE. - Collins 51J-4 Receiver covers the frequency range of 0.5 to 30.5 mc in 30 bands: 0.5 to 1.5, 1.5 to 2.5, and so on up to 30.5 mc. Each band is one megacycle wide. Circuits affected by band changes are the r-f amplifier grid, first, second, and third mixer grids, crystal selector, and crystal harmonic tuning circuits. The third mixer is switched in only on band 1 (.5 to 1.5 mc). See figure 4-1.

Operations involved in the changing of bands consist of selecting the proper coils in these circuits by means of tap switches and changing the position of the r-f amplifier and first mixer slug tables. All stages are permeability tuned by powdered iron slugs. The r-f amplifier and first mixer slug tables change position a full megacycle in tuning each time a band is changed. This is true of all three slug tables, which tune L104 through L113. However, the tap switches select the proper set of coils for the frequency desired.

Slug tables are driven from two sources: the main tuning knob and the BAND CHANGE knob. These two driving sources are connected to the slug tables through a differential gear mechanism. This is necessary since the coils for bands 4 to 7, 8 to 15, and 16 to 30 cover these tuning ranges with one complete excursion of the tuning slugs. For instance, the band 4 to 7 slug table tunes its associated coils through four megacycles; in one megacycle jumps when operated by the BAND CHANGE knob, and in complete coverage in between when operated by the tuning knob. An interesting feature of the differential gearing is its ability to combine the movements of the two driving sources so that the slug table is moved exactly one megacycle in each band change. The other slug tables operate similarly to the 4 to 7 table, except that the band 8 to 15 table tunes its associated coils through 8 mc, and the band 16 to 30 table tunes its associated coils through 15 mc. These three slug tables are moved simultaneously by means of separate cams.

Switch sections of the band switch are ganged with the BAND CHANGE knob through an over-travel coupler. This over-travel coupler drops the band switch at band 16 while the r-f slug tables continue to operate one position for each band as usual. Refer to figure 4-2. This mechanical diagram shows the gears and connecting shafts associated with band change and tuning. Shafts associated with changing bands are C, D, G, H, I, K, and the over-travel shaft. On band 1 radio frequency coils L101 and L110 are switched by means of the BAND CHANGE knob through the over-travel shaft and shaft G. On bands 2 and 3, the r-f coils are selected by the BAND CHANGE knob through the over-travel shaft and shafts G and K, variable i-f section coils, L116 through L119, being used as additional r-f coils on these bands. On bands 4 to 7, the coils are selected by the BAND CHANGE knob through the over-travel shaft and shaft G, and the position of the slug table is changed through shafts C and D. On these bands the same coils are used for each band. Band change is accomplished by moving the tuning slug in the coil an amount equal to one megacycle in frequency. The slug moves in the coil 0.250 inches for a one megacycle change. On bands 8 to 15, the r-f coils are changed by the over-travel shaft and shaft G, and the position of the slug table is changed one megacycle per band through shafts C and D. The movement of the slug table for a one megacycle change is 0.125 inches. On bands 16 to 30, the r-f coils are switches through the over-travel shaft and shaft G to position 16 where the band switch remains for bands 16 to 30 while the over-travel coupler allows shaft G to rotate through to the thirtieth band. The slugs in the r-f coils are driven through shafts C and D. The slugs travel 0.0625 inches during band change. During operation on any band between 4 and 30 the variable i-f channel is alternated from one variable i-f to the other by shafts G and K. Crystals are selected by operation of the BAND CHANGE knob through the 15-position Geneva system and shafts G, H, and I.

4.1.2. TUNING. - All r-f, mixer and variable i-f coils, as well as the variable frequency oscillator

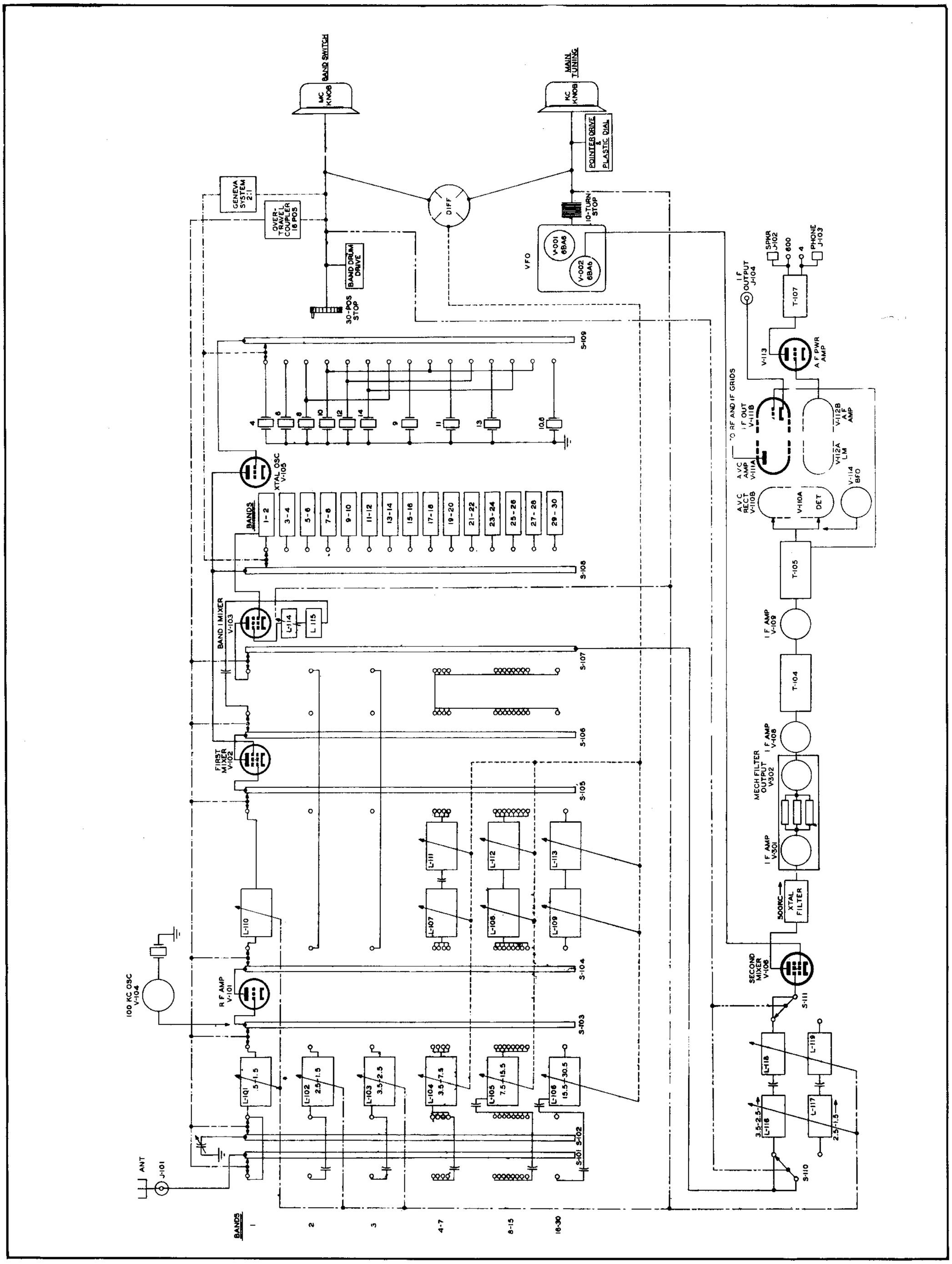

Figure 4-1. 51J-4 Band Change and Tuning System, Block Diagram

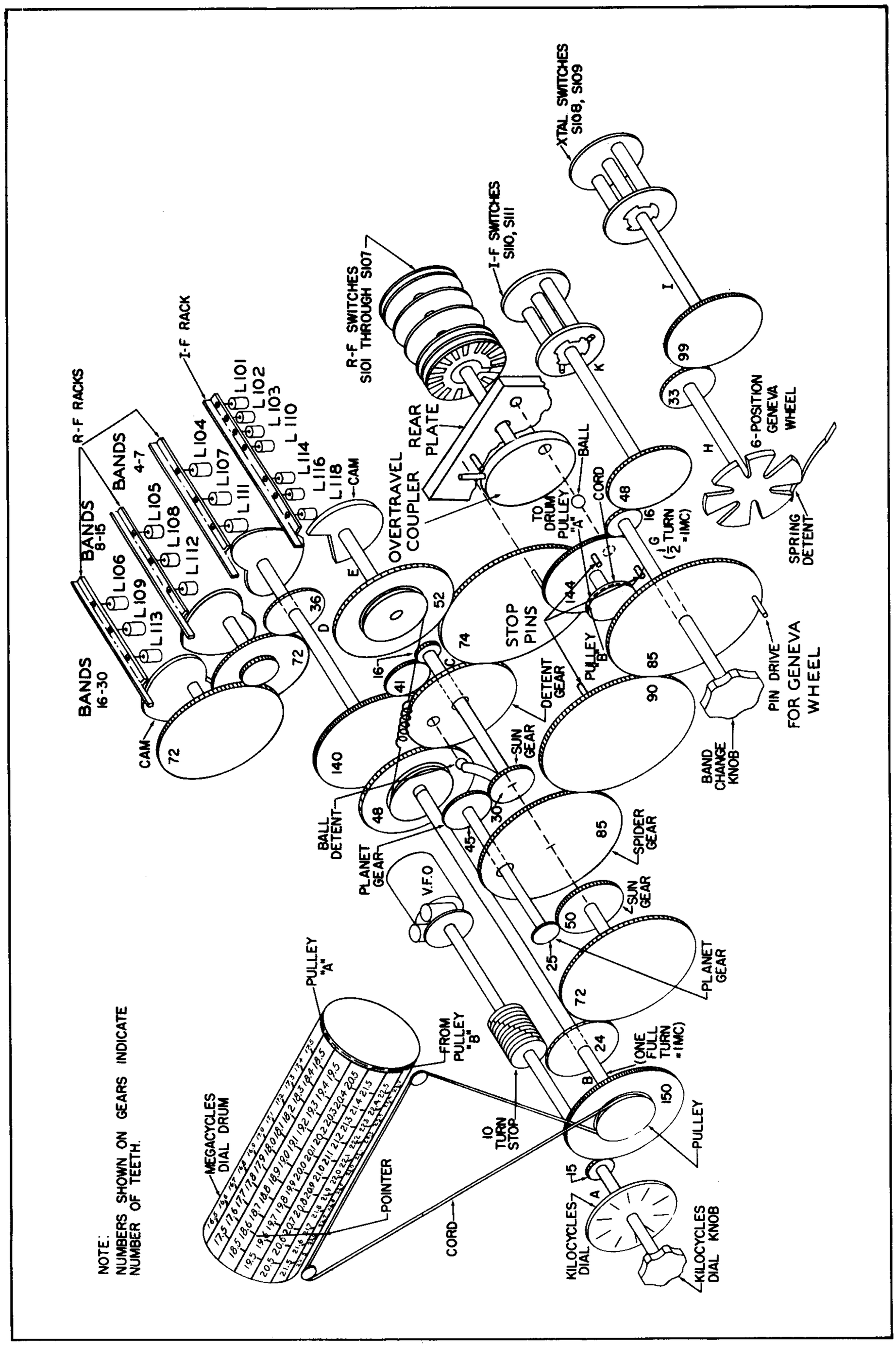

Figure 4-2. 51J-4 Mechanical Block Diagram

coil, are permeability-tuned by powdered iron cores. While tuning, these slugs move in and out of the coils at a rate determined by a cam or by a lead screw. Four slug racks or tables are used in the 51J-3 receiver to perform the function of tuning the r-f, mixer and variable i-f stages. The group of three slug tables in the rear portion of the chassis tunes the r-f and first mixer stages when the receiver is operating in the 3.5 to 30.5 mc frequency range (bands 4 to 30). The fourth slug table, located at the right hand edge of the receiver, tunes the r-f stage, the first mixer grid, the third mixer grid and the variable i-f coils when receiving in the range 0.5 to 1.5 mc. It tunes the r-f stage and variable i-f coils L116 and L118 when receiving in the range 1.5 to 2.5 and 2.5 to 3.5 mc. When receiving in the range 3.5 to 30.5 mc, this slug table tunes only the variable i-f coils L116 and L118. During tuning, positions of the slug tables are varied by a system of gears and cams; see figure 4-2. On band 1 (0.5 to 1.5 mc) coils L101 and L110 are tuned through this frequency range by the main tuning knob through shafts A, B, C and E. On bands 2 and 3 (2.5 to 1.5 and 3.5 to 2.5), tuning is done by the main tuning knob through the same shafts -- A, B, C and E. On band 4 to 7, the main tuning knob tunes coils L104, L107 and L111 over one-fourth of their tuning range through shafts A, B, C and D and the differential shafts. The BAND CHANGE knob moves this same rack through shafts G, C, D, and the differential in four steps. Each step is equal to one-fourth of the coils' tuning range and the shafts are positioned by means of the detent. Thus L104, L107, and L111 are tuned in one megacycle steps by the BAND CHANGE knob, and between these steps are tuned by the main tuning knob. On bands 8 to 15, coils L105, L108, and L112 are tuned through shafts A, B, C, D and the differential. Bands 16 to 30 are also tuned through shafts A, B, C, D and the differential. Each of the two variable frequency i-f channels covers one megacycle range and is tuned by means of the main tuning knob through shafts A, B and E. The proper channel is selected by the BAND CHANGE knob through shafts G and K.

4.1.3. FREQUENCY INDICATION. - The band on which the receiver is operating is indicated on the drum dial that is rotated by the BAND CHANGE knob through shaft G. The 100 kc divisions are indicated by a pointer on the slide rule dial. This pointer is driven from the main tuning knob through shaft A. Kilocycle divisions are indicated by the plastic dial mounted on shaft A. Two scales are necessary on this dial because bands 2 and 3 run in opposite directions. Mechanical stops are mounted on the control shafts to prevent overtravel.

4.2. ELECTRICAL DESCRIPTION.

4.2.1. GENERAL. - Collins 51J-4 Receiver is a complete coverage superheterodyne receiver capable of AM and CW reception in the frequency range of 0.5 to 30.5 megacycles. The set covers the tuning range in 30 bands, each band one megacycle wide. Various portions of the tuning spectrum use single, dual and triple conversion. Three stages of intermediate-frequency amplification and a crystal filter produce the desired degree of selectivity. The receiver also features a low impedance AVC, a good noise limiter, two stages of audio amplification and a 100 kc frequency spotter or calibrator.

The receiver employs dual conversion on most bands and single or triple on others in order to obtain full coverage economically with a minimum of image and other spurious responses on all bands. Band 1, 0.5 to 1.5 mc uses triple conversion, bands 2 and 3, 1.5 to 3.5 mc, use single conversion, and bands 4 to 30, 3.5 to 30.5 mc, use dual conversion. Each band is numbered on the band's center frequency. For instance, band 1 covers 0.5 to 1.5 mc, band 2 covers 1.5 to 2.5 mc, and so on.

On band 1, where triple conversion is necessary, an intermediate mixer is employed between the first and second mixers used in the regular dual conversion scheme. The 0.5 to 1.5 mc carrier on band 1 is fed to the first mixer where it is beat against a 12 mc signal from the h-f crystal oscillator to produce an 11.5 to 10.5 mc signal. This signal is beat against an 8 mc signal in the intermediate mixer to produce the variable i-f or 3.5 to 2.5 mc. The variable i-f is then combined with 3 to 2 mc variable oscillator output to produce the fixed 500-kc if. On bands 2 and 3, the 1.5 to 3.5 mc carrier is fed directly to the second mixer where it is combined with the same variable oscillator output to produce the 500-kc fixed i-f. On bands 4 to 30 the regular dual conversion scheme is employed. On the even numbered bands the signal frequency is beat against the high frequency oscillator output to produce a variable i-f of 2.5 to 1.5 mc. On the odd numbered bands a variable i-f of 3.5 to 2.5 mc is produced. The variable i-f is then combined in the second mixer with the v.f.o. output to produce the 500-kc fixed i-f. The detailed operation of the various receiver circuits is outlined in the following paragraphs.

4.2.2. RADIO FREQUENCY AMPLIFICATION. - One stage of radio frequency amplification is used on all bands. See block diagram, figure 4-1. The circuit is a conventional r-f amplifier circuit employing a type 6AK5 miniature r-f pentode, V101.

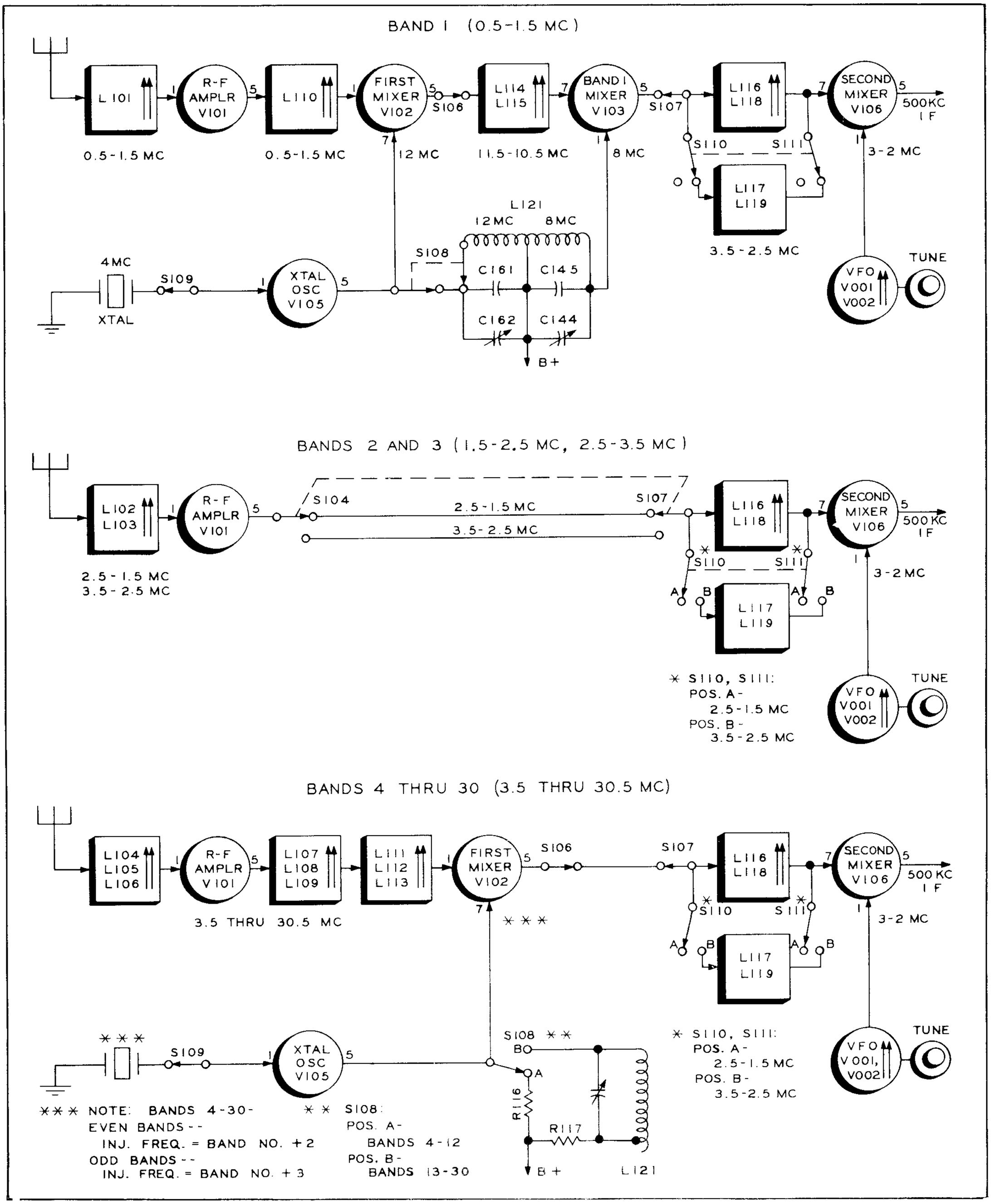

Figure 4-3. 51J-4 Frequency Conversion Circuits

This tube is used because of its low noise and good sensitivity characteristics at high frequencies.

The control grid of this stage is tuned on all bands, the tuned circuit being selected by r-f switch, S103. The antenna is capacitively coupled to the tuned circuits in the control grid through r-f switches, S101, and S102.

When operating in the American broadcast band (band 1), the plate circuit of the r-f amplifier is impedance-coupled to the grid circuit of the first mixer by resistor R105 and capacitor C117. On bands 2 and 3 the plate of the r-f amplifier tube is switched directly to the primary coils of the variable i-f tuner, where additional selectivity is obtained. Single conversion is used on these bands. When operated on bands 4 to 30, the plate circuit is tuned and capacitively coupled to a corresponding tuned circuit in the grid of the first mixer stage.

The r-f coils and associated trimmers in the plate circuit are selected by the BAND CHANGE knob and tuned through the various band ranges via the slug table arrangements. The r-f coils for bands 1, 2, and 3 are mounted on the variable i-f slug table which is at the extreme right hand edge of the receiver as viewed from the front. See figure 5-1. The coils for bands 4 to 30 are clustered at the rear of the chassis and are tuned by slugs mounted on the three r-f and mixer slug tables.

4.2.3. MIXER STAGES.

(a) FIRST MIXER. - The first mixer stage uses a type 6BE6 miniature pentagrid converter tube, V102. This stage is used on all bands except bands 2 and 3, where only one conversion stage is necessary.

The grid 1 circuit (pin 1) receives the r-f signal from the r-f amplifier stage. On band 1, this grid circuit is tuned by L110, C118, and C119, and impedance coupled to the plate of the r-f amplifier through C117 and R105. On bands 4 through 30, the circuit is tuned by the proper coil and trimmer groups selected by the r-f switch S104, and capacitively coupled to corresponding tuned circuits in the plate of the r-f amplifier stage.

The grid 3 (pin 7) input is obtained from the plate of the hfo (V105). On bands 4 through 30, the frequency of the heterodyning signal applied to this grid is such as to produce an output frequency which falls in one of the two variable i-f ranges, (2.5 to 1.5 mc or 3.5 to 2.5 mc), depending on which of the bands between 4 and 30 is being operated. On band 1, a 12-mc heterodyning signal is applied to this grid, the output of the stage then being in the range of 11.5 to 10.5 mc, which is again heterodyned in the Band 1 Mixer.

The plate output frequency of this stage is then shown to be in the variable i-f spectrum on bands 4 through 30, and the output applied directly to the tuned variable i-f coils. On band 1, the plate circuit is tuned to the range of 11.5 to 10.5 mc by components L114, L115, C139, and C140, and the output applied for further conversion to the Band 1 Mixer, V103.

(b) SECOND MIXER STAGE. - The second mixer stage, V106, also employs a 6BE6 miniature converter tube. Input to this stage is always either 3.5 to 2.5 mc or 2.5 to 1.5 mc from the variable i-f coils L116/L118 and L117/L119. The 3 to 2 mc output of the permeability tuned oscillator is fed into the second mixer tube at grid number one to heterodyne against the input signal to produce a 500 kc intermediate frequency. This mixer stage is always used for all bands.

(c) THIRD MIXER STAGE. - The third, or band 1, mixer stage is used only when receiving on band 1. A type 6BE6 miniature converter tube is used in this application also. Grid number 3 of this tube is excited by a 11.5 to 10.5 mc signal from the plate circuit of first mixer tube V102, and grid number one is excited by a heterodyning 8 mc signal from the crystal oscillator. The output of the third mixer is then 3.5 to 2.5 mc, which is then fed to the grid of the second mixer through the variable i-f coils. This, of course, takes place only when receiving on band 1 as this stage is not used on the other bands.

4.2.4. HIGH FREQUENCY OSCILLATOR. - The high frequency oscillator uses a 6AK5 miniature pentode tube in a piezoelectric oscillator circuit. No tuned coils are needed to make the circuit oscillate because in phase feedback voltage is produced across r-f choke L120. Ten quartz crystals are used to control the frequency of the oscillator output for the various bands. At the minimum, each crystal is used for two adjacent bands, i.e. 1-2, 3-4, 5-6 and so on, since the crystal switch S109 changes position only on odd-numbered bands. For instance, the 8 mc crystal used for bands 5 and 6 is also used for bands 13 and 14 by utilizing its second harmonic at 16 mc. In those instances where harmonic operation is used, a tuned circuit picks off the correct harmonic. This tuned circuit is in the plate circuit of the hfo, V105, and consists of the section of coil L121 in the hfo plate circuit and a number of tuning capacitors. The latter are selected by switch pie S108.

The circuit consisting of the section of L121 in the grid circuit of the Band 1 Mixer and capacitors C144 and C145, is tuned to 8 mc and is used when operating on band 1 to furnish the Band 1 Mixer with an 8 mc heterodyning signal (second harmonic of the 4- mc crystal). At the same time, the other section of L121 and associated trimmers is tuned to 12 mc (third harmonic of the 4-mc crystal) to furnish the first mixer with the required 12-mc heterodyning signal. A list of the crystals and the bands upon whch they function is outlined as follows:

CIRCUIT FREQUENCY

CRYSTAL FREQUENCY	RECEIVER FREQUENCY	BAND	INJECTION FREQUENCY
4	0.5 to 1.5	1	8 and 12
	1.5 to 2.5	2	None
6	2.5 to 3.5	3	None
	3.5 to 4.5	4	6
8	4.5 to 5.5	5	8
	5.5 to 6.6	6	8
	12.5 to 13.5	13	16
	13.5 to 14.5	14	16
10	6.5 to 7.5	7	10
	7.5 to 8.5	8	10
	16.5 to 17.5	17	20
	17.5 to 18.5	18	20
	26.5 to 27.5	27	30
	27.5 to 28.5	28	30
12	8.5 to 9.5	9	12
	9.5 to 10.5	10	12
	20.5 to 21.5	21	24
	21.5 to 22.5	22	24
14	10.5 to 11.5	11	14
	11.5 to 12.5	12	14
	24.5 to 25.5	25	28
	25.5 to 26.5	26	28
9	14.5 to 15.5	15	18
	15.5 to 16.5	16	18
11	18.5 to 19.5	19	22
	19.5 to 20.5	20	22
13	22.5 to 23.5	23	26
	23.5 to 24.5	24	26
10.67	28.5 to 29.5	29	32
	29.5 to 30.5	30	32

4.2.5. VARIABLE INTERMEDIATE FREQUENCY. - The variable intermediate frequency section consists of two channels, one for a frequency 2.5 to 1.5 mc and the other for 3.5 to 2.5 mc. The 2.5 to 1.5 mc i-f is used on the even numbered bands which employ double conversion, and the 3.5 to 2.5 mc i-f is used on the odd numbered bands which employ double conversion. The 2.5 to 1.5 mc i-f is also used on band 2 as an additional tuned r-f circuit. The 3.5 to 2.5 variable i-f is used on band 3 as an additional tuned r-f circuit and on band 1, in the usual application, as a variable i-f for the odd numbered bands. Using two variable i-f channels in this manner cuts in half the number of crystals needed by the high frequency oscillator, since each crystal's fundamental frequency or useful harmonic is used for two bands. Inductors L116 and L118 form the lower frequency i-f coils (2.5 to 1.5) and are the coils in which the tuning slug travels. The 3.5 to 2.5 mc i-f is obtained by shunting L117 across L116, and L119 across L118 to lower the inductances of L116 and L118. Switch sections S110 and S111 alternately switch the shunting coils in and out as the BAND CHANGE knob is rotated. The variable i-f coils are in the grid of the second mixer stage.

4.2.6. VARIABLE FREQUENCY OSCILLATOR. - The receiver circuits described so far have the function of receiving the spectrum in 1 megacycle bands that are presented to the grid of the second mixer. The scheme for obtaining high stability is completed by a method of heterodyning the signals to a lower, fixed intermediate frequency. In this application, a highly stabilized 3 to 2 mc permeability tuned oscillator, Model 70E-15, is employed to heterodyne against the 2.5 to 1.5 and the 3.5 to 2.5 mc output of the variable frequency i-f. The resulting 500 kc signal is amplified by the 500 kc i-f amplifier.

The coil in the oscillator is cam wound to produce extremely linear frequency change with linear movement of the tuning slug. The circuit is temperature-compensated and the components are sealed against changes in humidity. Ten turns of the oscillator lead screw produce a linear frequency change of one megacycle. The inductance of the oscillator coil is trimmed by an iron core series inductor, the value of which is adjusted at the factory and sealed. A type 6BA6 tube, V002, is used for isolation purposes following the oscillator tube and is an integral part of the oscillator. For stabilization purposes, the supply voltages for the oscillator unit are regulated by V116, a type OA2 tube.

NOTE

A MECHANICAL SQUEAK MAY DEVELOP BETWEEN THE LEADSCREW AND CORE IN THE PERMEABILITY TUNED VFO. MATERIAL SELECTION AND THE LOADING NECESSARY TO INSURE UTMOST STABILITY TEND TO CAUSE THIS SQUEAK. HOWEVER, MATERIALS ARE SELECTED FOR THEIR ABILITY TO WORK WELL TOGETHER WITH SMALL WEAR AND THE SQUEAK IS HARMLESS.

4.2.7. CRYSTAL FILTER. - Selectivity of the 51J-4 Receiver is improved greatly by use of a crystal filter in the 500-kc i-f channel. The crystal filter circuit consists primarily of 500-kc i-f input transformer T101, a 500-kc crystal, and a high impedance tuned circuit T102, connected as shown in figure 4-4. When SELECTIVITY switch S114 is in position 0 the crystal is shorted and T101 is connected directly to T102. Thus there is no crystal filter action when S114 is in position 0; selectivity is determined by the receiver's tuned circuits alone. When S114 is in any other position, crystal filter action takes place--position 4 giving the greatest selectivity.

To analyze the operation of this circuit consider only the loop containing T101 secondary, crystal Y112, and tuned circuits T102. Assume that S114 is in position 1. See figure 4-5. The secondary of T101 is a low impedance coil with a grounded center tap. The primary of T101 is tuned to 500 kc. Consider crystal Y112 in series with T102 as a voltage divider, grid voltage to V301 being taken from the point between Y112 and T102. For an i-f of exactly 500 kc, impedance of the crystal is very low--of the order of 2000 to 4000 ohms, and the impedance of T102 is of the order of 100,000 ohms. Thus, at 500 kc practically all the voltage appearing across T101 secondary is fed to the grid of V301.

For frequencies a few kilocycles further away from 500 the impedance of the crystal increases greatly. When the crystal impedance equals that of T102, only one-half the voltage on T101 secondary appears on the grid of V301. As the crystal impedance becomes still greater, the voltage appearing on V301 grid decreases. This results in a narrower i-f response curve, or in greater selectivity, than that obtained without crystal filtering. Switching S114 to positions 2, 3, or 4 merely shunts T102 with resistance, which effectively lowers the impedance

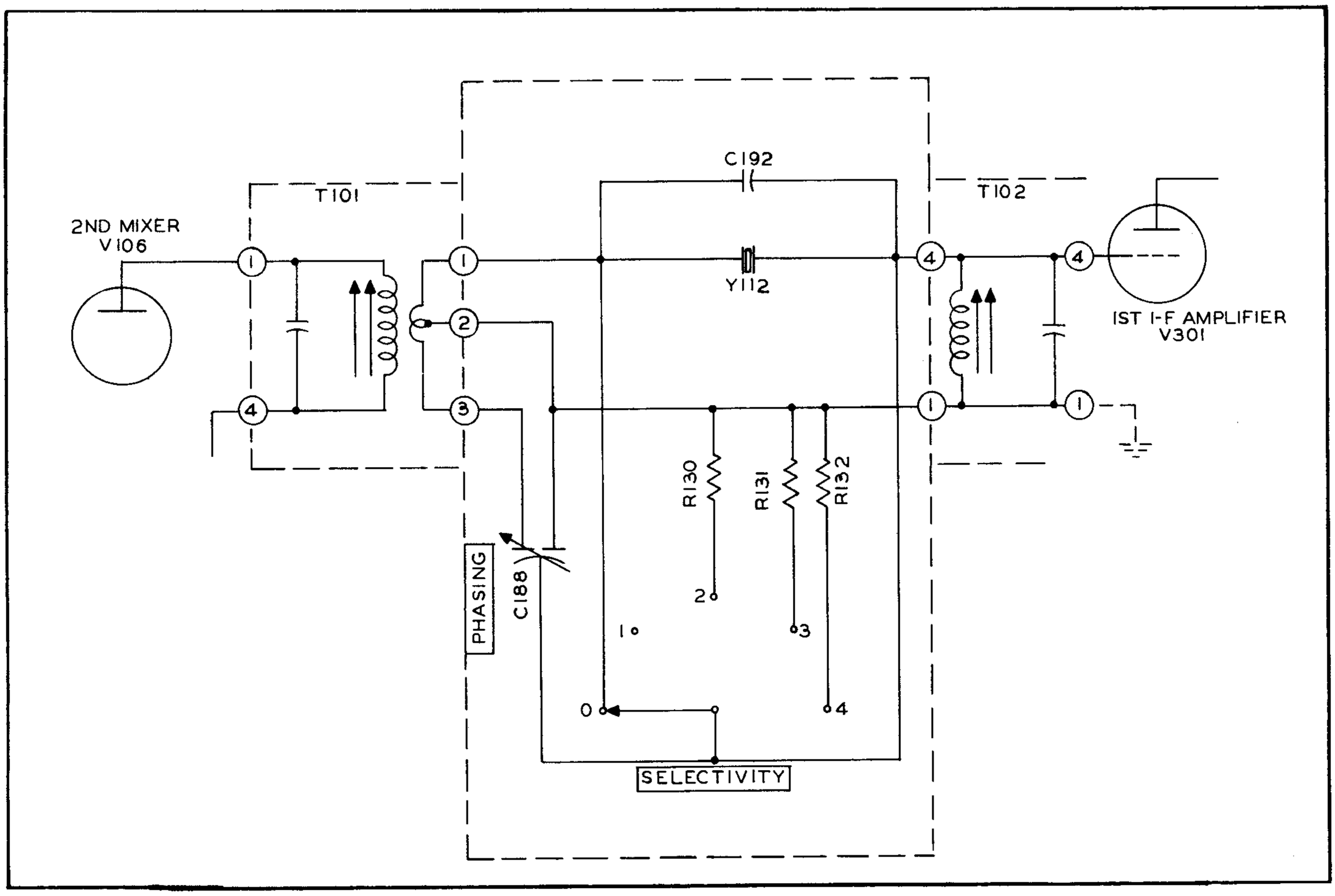

Figure 4-4. 51J-4 Crystal Filter

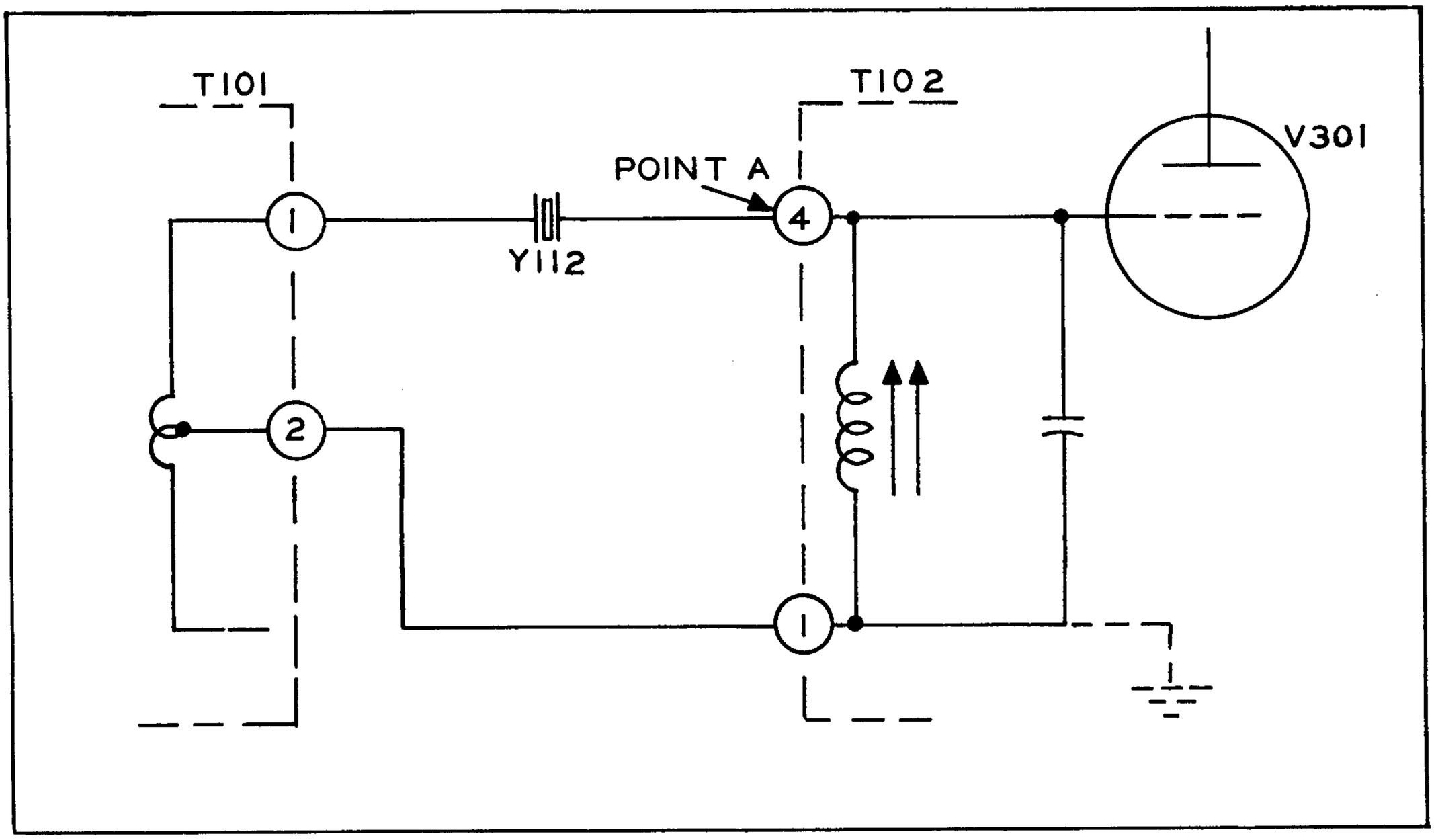

Figure 4-5. 51J-4 Crystal Filter - Simplified, Position "1"

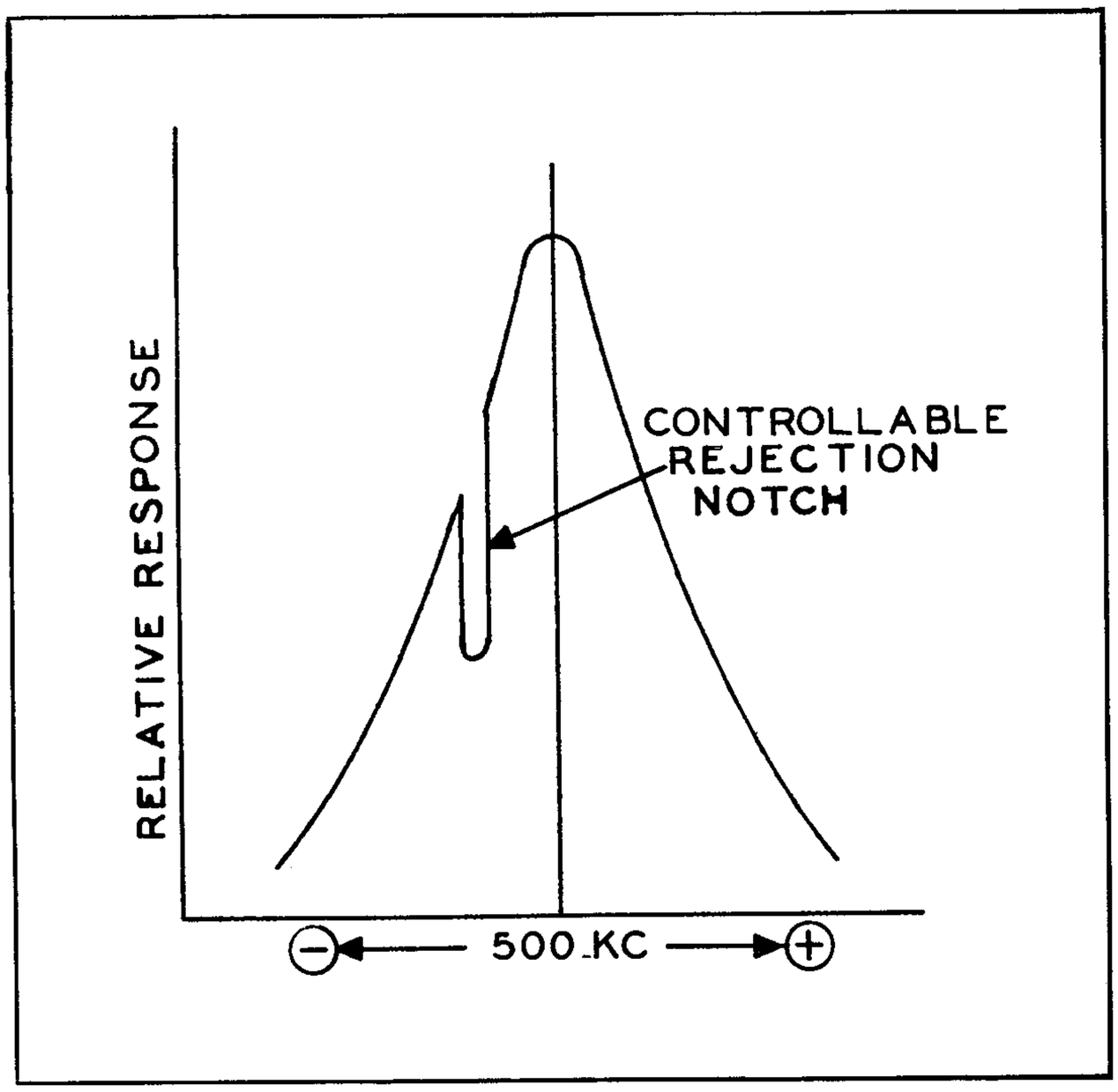

Figure 4-6. 51J-4 Crystal Phasing Rejection Notch

of T102 for those positions. This results in a more rapid decrease in V301 grid voltage as the i-f deviates to either side of 500 kc. Hence, as the effective impedance of T102 lowers, selectivity increases. In the sharpest position the bandwidth at 6 db down is from 200 to 300 cps.

The primary purpose of PHASING capacitor C188 is to produce a controllable rejection notch in the i-f response curve so that unwanted heterodynes may be tuned out. The section of C188 connected to the bottom end of T101 secondary provides a capacitive path around the crystal that balances out the shunt capacitance of the crystal in its holder and external capacitor C187. Varying C188 either side of the balance point varies the antiresonant frequency of the crystal circuit within 3 kc either side of 500. Since the impedance of the crystal circuit at antiresonance is extremely high, the crystal filter rejects signals at the antiresonant frequency. Thus at antiresonant frequency points, the phasing action gives a sharp dip in response and the selectivity curve takes on a notch as illustrated in figure 4-6.

In order to avoid detuning tuned circuit T102 when varying C188, a second section of C188 is shunted across T102. Since C188 has a split stator and a single rotor, the total shunt capacitance across T102 remains practically constant as the setting of C188 is varied.

4.2.8 SECOND INTERMEDIATE FREQUENCY. - The second intermediate frequency channel is fixed-tuned to 500 kc. It consists of the mechanical filter and four amplifier stages and employs 6BA6 tubes in all stages. Input tube V301 is excited by the crystal filter output coil T102. Permeability-tuned transformers, with output taps taken off the secondary coils near the ground end, are used in the amplifier portion. Both i-f amplifiers stages and one tube in the mechanical filter are supplied with AVC voltage. Plate and fixed screen voltages are controlled by the ON-STANDBY-OFF switch and the remote operation relay, K101 on all 500 kc i-f tubes except V302. These voltages are removed to render the receiver inoperative during transmission periods.

4.2.9. DETECTOR. - The detector in the 51J-4 Receiver consists of one half of a 12AX7 dual triode tube, V110 (pin numbers 6, 7, and 8). The tube is used as a diode, with rectification taking place between the plate and cathode, the grid being connected to the plate. R150 and R151 serve as load resistors for the detector while C202 provides r-f filtering.

4.2.10. NOISE LIMITER. - A series type noise limiter is used in the 51J-4 Receiver. This limiter

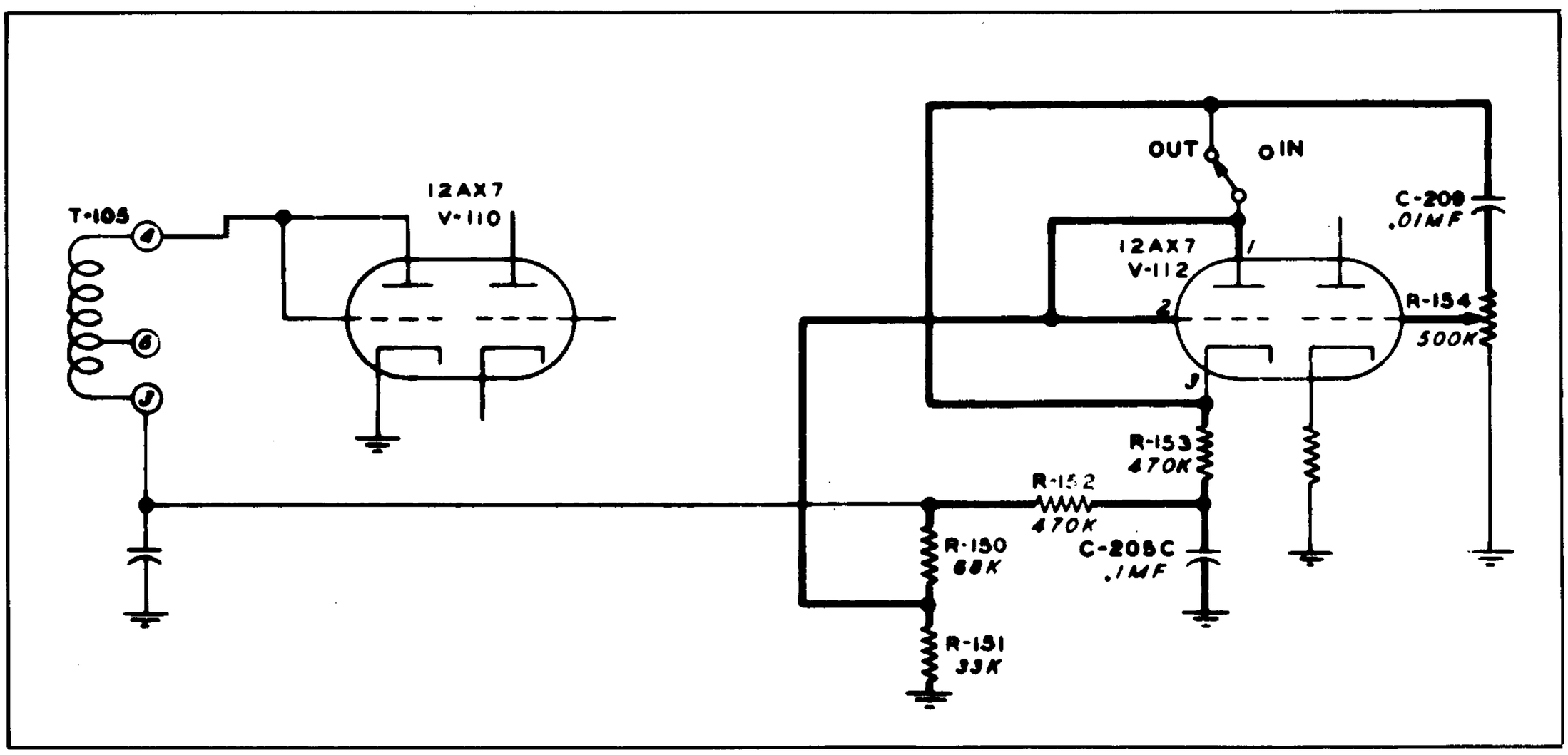

Figure 4-7. 51J-4 Noise Limiter Circuit

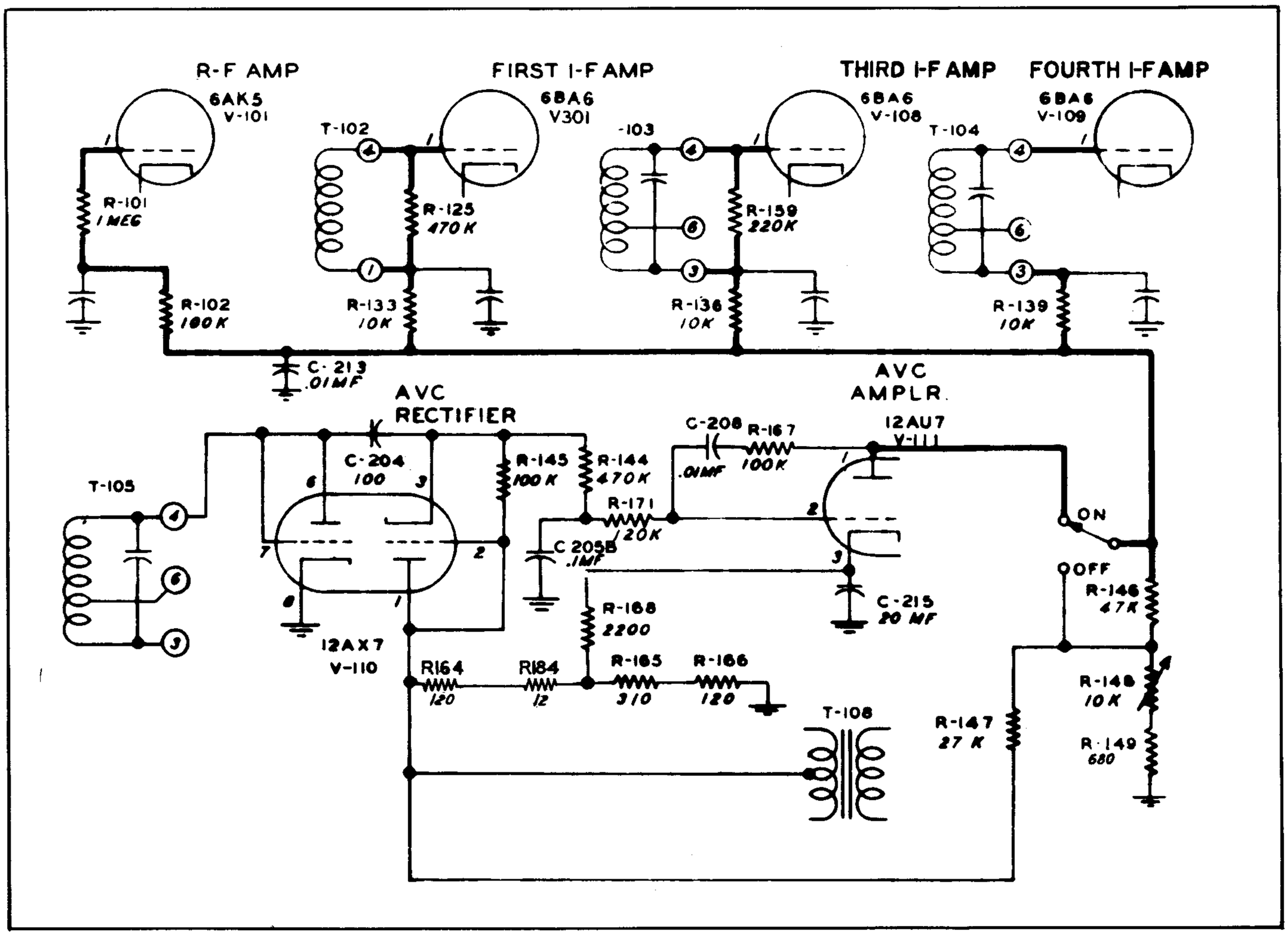

Figure 4-8. 51J-4 A. V. C. Circuit

employs one-half (pins 1, 2, and 3) of a type 12AX7 dual triode tube, V112. Refer to figure 4-7. Due to a-c loading of the second detector, heavy noise impulses are automatically clipped from the positive audio peaks in the detector. The noise appearing on the negative side of the audio cycle is clipped by the noise limiter. In operation, a negative voltage produced by rectification of the carrier is developed across capacitor C205C. This voltage cannot change rapidly due to the value of C205C and R152. This negative potential is placed upon the cathode of the noise limiter tube through R153. The cathode is then negative with respect to the plate of the noise limiter tube, due to voltage divider action of R150 and R151 and current flows. This current is modulated by the audio which then appears on the noise limiter cathode to which the grid of the audio amplifier section of V112 is connected. The noise limiter diode will conduct as long as the cathode is negative in respect to the plate. However, should a heavy noise impulse be received, the plate would be driven negative faster than the cathode could follow due to the time constant of R152 and C205C. If the plate is driven more negative than the cathode, the tube will cease to conduct and no audio will reach the grid of the following audio tube. The audio cannot reach the cathode of the limiter tube directly from the diode load because of the filtering action of R152 and C205C. The value of modulation at which the limiter clips can be adjusted by changing the value of some of the components in the circuit. In this receiver, limiting starts between 50% and 85% modulation. Switch S116 bypasses the signal around the noise limiter when receiving conditions do not require its used.

4.2.11. AUTOMATIC VOLUME CONTROL. - The problem of blocking that is created by strong signals or heavy static is eliminated by use of an amplified AVC system and a low impedance AVC line. Refer to figure 4-8. The second triode section of V110 is used as an AVC rectifier to produce control voltage for the AVC amplifier which uses one half of dual triode V111. The AVC voltage that is applied to grids of the controlled tubes is produced when plate current flowing through one-half of AVC amplifier tube V111 causes a voltage drop across resistor R146. Plate voltage for the amplifier half of V111 is obtained from the voltage drop across resistors R165 and R166, which are in series with the center tap of the power transformer to ground. However, V111 will not draw plate current when there is no signal input to the receiver because of approximately 11 volts of bias that is placed upon its grid by the voltage drop through R164. This bias voltage for V111 is taken from the end of R145 through which the rectified carrier flows in opposition to the bias voltage. Thus, when the rectified carrier becomes strong enough to overcome the bias voltage on V111, V111 will draw plate current and produce a voltage drop across R146, thereby producing AVC voltage in proportion to the strength of the received signal. The bias on the grid of V111 is high enough to produce a delay in the generation of AVC voltage and thus allows the receiver to function at full sensitivity on weak signals. Resistor R144 and capacitor C205B form the time constant in the AVC circuit. R171, C208, and R167 are used in a degenerative circuit to prevent the AVC amplifier tube from responding to low audio frequencies. AVC is turned off by opening the plate circuit of AVC amplifier tube V111. Tubes controlled by AVC bias include the r-f amplifier V101, and the 500 kc i-f amplifier tubes, V301, V108 and V109.

4.2.12. AUDIO AMPLIFIER. - Two stages of audio amplification are employed in the 51J-4 Receiver. The first stage utilizes the second triode section of V112 in a resistance-coupled amplifier arrangement. A type 6AQ5 miniature pentode power amplifier tube is used in the audio output stage. This stage has fixed bias obtained from the voltage drop produced across R166 in the center tap lead of the high voltage transformer secondary. The secondary of the audio output transformer has both 600-ohm and 4-ohm outputs. Both the outputs are terminated on the rear of the chassis at terminal strip E102. Plug-in connections to both outputs are also made on the front panel.

4.2.13. 50 OHM I-F OUTPUT. - One-half of dual triode V111 supplies 50-ohm 500-kc i-f to coaxial connector J104 on the rear of the chassis. This section of V111 is used as a cathode follower. Excitation is obtained from the voltage drop across R178, which is connected in a series circuit across the secondary of i-f transformer T105.

4.2.14. 100 KC CALIBRATOR. - This calibrator is included with the receiver for use when extreme accuracy of calibration in the order of 200 cycles is desired. It is coupled to the grid r-f amplifier tube V101, and is made operable when CALIBRATOR ON-OFF switch S111 is turned on. The calibrator utilizes a 6BA6 tube in a piezoelectric circuit, a low drift 100 kc crystal between the control grid and screen, and a 5-25 uuf capacitor C169 between grid and ground. The capacitor permits the making of small frequency corrections that set the calibrator to zero beat with a primary frequency standard. Variable capacitor C224 on the front panel provides for fine adjustment of frequencies.

4.2.15. POWER SUPPLY. - The receiver is equipped with a power transformer that is connected for a 115-volt source. However, the transformer can be used on a 230 volt source by reconnecting the primary windings in series. The power supply is capable of producing 220 d-c volts at 125 ma. A two section choke input filter is used following a 5V4 high vacuum rectifier, a filter consists of a 3 henry input choke, a 5 henry output choke and two 35 mfd filter capacitors. B+ for the audio output is taken from the junction of the two chokes. The receiver's ON-OFF switch, and a 1.5 ampere, slow blow fuse are located in the primary circuit of the power supply. A 6.3 volts a-c are furnished for the tube filaments and dial lights from a winding on the power transformer.

4.2.16. BEAT FREQUENCY OSCILLATOR. - The bfo is a modified Hartley circuit employing electron coupling in a type 6BA6 pentode tube, V114. The output frequency is 500 ±3 kc, which is beat against the 500-kc intermediate frequency in the detector stage to produce an audio tone. Pitch of the audio tone is varied by changing the frequency of oscillation in the bfo by means of the BFO PITCH control on the front panel. When the BFO-ON-OFF switch is in OFF position, the screen grid of the bfo stage is grounded.

4.2.17. MECHANICAL FILTER. - The mechanical filter uses the principle of magnetostriction to convert oscillating magnetic energy to mechanical vibration. The magnetostriction transducer input coil is resonated at 500 kc. A nickel wire within this coil vibrates mechanically and transmits this mechanical energy to the first of a series of nickel alloy disks. The mechanical vibration of this first disk is coupled to succeeding disks by means of nickel-wire coupling elements. Biasing magnets at either end of the mechanical filter polarize the filter elements to prevent frequency doubling, in much the same manner as biasing magnets in a headphone prevent the headphone diaphragm from bending in the same direction for both halves of an a-c cycle. This mechanical vibration of the last disk is coupled to a magnetostriction transducer element identical to the one used at the input of the filter. By a reverse principle of magnetostriction, the mechanical vibration of the nickel-wire transducer core is converted to electrical impulses.

Each of the disks employed in the mechanical filter has a mechanically resonant Q exceeding 2,000. Six of these disks are overcoupled to produce a mechanically-shaped response curve with a flat top and straight, almost vertical sides. Thus, the filter passes a band of frequencies very little wider than the flat top of the selectivity curve. The 3.1 kc mechanical filter used in the 51J-4 passes a band of frequencies approximately 3 kc wide and centered on 500 kc, proving an i-f selectivity curve ideal for the reception of AM and single sideband signals. The 6-kc filter and the 3.1 kc filter are most used for voice reception and a mechanical filter having similar selectivity characteristics but having a bandpass of 1.4 kc is generally used in cw reception or in 'phone reception under conditions of extremely heavy QRM or QRN.

SECTION V
MAINTENANCE

5.1. INSPECTION.

5.1.1. GENERAL. - This radio equipment has been constructed of materials considered to be the best obtainable for the purpose, and has been carefully inspected and adjusted at the factory to reduce maintenance to a minimum. However, a certain amount of checking and servicing will be necessary to maintain efficient and dependable operation. The following section has been written to aid in checking the equipment.

5.1.2. ROUTINE INSPECTION. - Routine inspection schedules should be set up for periodic checks of this equipment. This inspection should include examination of the mechanical system for excessive wear or binding, and of the electrical system for electrical defects and deterioration of components.

If routine inspection of the equipment is carried out faithfully, the chances of improper operation of the equipment are greatly minimized. It is important, therefore, that this inspection be made as frequently as possible and should be sufficiently thorough to include all major electrical circuits of the equipment as well as the mechanical portion.

5.1.3. CLEANING. - The worst enemies of uninterrupted service in equipment of this type are dirt and corrosion. Dirt reduces efficiency and causes undue wear of rotating parts. Corrosion most seriously affects contacts such as those on tap switches, tubes, relays and cables. Salt laden air, dirt, and moisture tend to accelerate corrosion. The result may be equipment failure for no apparent reason.

Periodic dusting of accessible parts by means of a soft brush and a jet of dry, oil-free air removes foreign particles. Under certain conditions it is difficult or virtually impossible to prevent accumulation of moisture. Even so, frequent wiping of parts lessens danger of corrosion. If the atmosphere is corrosive, frequent inspection and wiping of parts is of especial importance.

5.1.4. VACUUM TUBES. - Check the emission characteristics of all tubes; then examine all tube prongs to make sure they are free from corrosion. Straighten bent pins with a tube pin straightener. See that all tubes are firmly seated in their proper sockets, and that a good electrical contact exists between tube prong and socket. Before discarding a tube, be sure that it is at fault and that the trouble is not due to a loose or broken connection within the equipment. Keep an extra set of tested tubes on hand at all times. If an equipment's faulty performance seems due to tube failure, check the tubes by replacing them with the extras. Inspection will usually locate defective tubes that are overloading power circuits. Excessive heating or sputtering within a vacuum tube indicates a fault in the tube circuit.

5.1.5. TUBE REPLACEMENT PRECAUTIONS.

(a) Remove tubes by pulling them straight up.

(b) Before inserting a tube, make certain that the pins are straight and that it is of the correct type for the socket into which it is to be placed.

5.1.6. TUBE TABLE

SYMBOL	TYPE	FUNCTION
V101	6AK5	RF amplifier
V102	6BE6	First mixer
V103	6BE6	Band 1 mixer
V104	6BA6	Calibration oscillator
V105	6AK5	Crystal h-f oscillator
V106	6BE6	Second mixer
V301	6BA6	First 500 kc i-f amplifier
V302	6BA6	Second 500 kc i-f amplifier

SYMBOL	TYPE	FUNCTION
V108	6BA6	Third 500 kc i-f amplifier
V109	6BA6	Fourth 500 kc i-f amplifier
V110	12AX7	Detector and AVC rectifier
V111	12AU7	AVC amplifier and i-f output cathode follower
V112	12AX7	Noise limiter and first audio amplifier
V113	6AQ5	Audio power amplifier
V114	6BA6	Beat frequency oscillator
V115	5V4	Power rectifier
V116	OA2	Voltage regulator
V001	6BA6	Variable frequency oscillator
V002	6BA6	Oscillator isolation amplifier

5.2. TROUBLE SHOOTING.

5.2.1. GENERAL. - Improper performance of radio equipment is usually due to tube failure. Refer to paragraph 5.1.4. In general, the type of trouble encountered in radio aparatus can be ascertained by means of various tests and measurements. Components in the associated circuit may then be checked and the cause of trouble located.

Useful resistance and voltage measurements will be found in table 5-1.

NOTE

NO ONE BUT AN AUTHORIZED AND COMPETENT SERVICE MAN EQUIPPED WITH PROPER TEST FACILITIES SHOULD BE PERMITTED TO SERVICE THIS EQUIPMENT.

5.2.2. FUSES. - This equipment contains fuses of the correct rating. Replace blown fuses only after carefully examing affected circuits to make certain that no permanent fault exists. Use only 1.5 ampere, slow blow fuses.

5.3. ALIGNMENT.

5.3.1. GENERAL. - Should the receiver get out of alignment, return it to satisfactory performance by means of the following procedure.

5.3.2. EQUIPMENT AND TOOLS USED FOR ALIGNMENT.

(a) 500-kc to 30.5-mc signal generator.

(b) D-c vacuum tube voltmeter.

(c) Oscilloscope.

(d) Detuning network consisting of a .01 capacitor and 4700-ohm resistor in series with clip leads.

(e) Fiber or bakelite adjusting tool, 1/8-inch diameter with screwdriver type bit. (Supplied)

(f) Fiber or bakelite adjusting tool, 5/16-inch diameter with screwdriver type bit. (Supplied)

(g) Small screwdriver.

NOTE

IF A SIGNAL GENERATOR IS NOT AVAILABLE, THE CALIBRATION OSCILLATOR MAY BE USED FOR ALIGNMENTS 5.3.5 (a through h) AND 5.3. (9 through 14). USE THE PROCEDURE OUTLINED BELOW BUT LEAVE THE CALIBRATION OSCILLATOR ON. SET THE BFO AT EXACTLY 500 KC AS IN PARAGRAPH 5.3.6. COUPLE THE OUTPUT OF THE CALIBRATION OSCILLATOR, AT C173, TO PIN 7 OF V106 WITH A CLIP LEAD. TUNE THE RECEIVER TO EACH ALIGNMENT FREQUENCY BY ZERO BEATING WITH THE BFO. THEN TUNE TRIMMERS AND CORES, USING INPUT METER TO INDICATE MAXIMUM READINGS.

5.3.3. CRYSTAL OSCILLATOR TRIMMER ADJUSTMENT.

(a) By means of a "Q" meter or accurate bridge measuring device, adjust trimmer C167 marked XTAL on chassis, to provide an input capacitance of 32 mmf across the crystal holders. This value will occur at or near minimum capacitance setting. Make measurement by removing any one of the hfo crystals

and measuring across socket terminals. The MEGACYCLE control must be set to a band which employs the crystal removed. See table in paragraph 4.2.4. Should this capacitor, C167, be badly mistuned, the crystals will be off frequency and low in output.

(b) Connect a 470K-ohm resistor to pin 7 of tube V102. Connect VTVM between free end of 470-ohm resistor and chassis. This resistor reduces the effect of the capacitance of the meter lead.

(c) In all of the following adjustments, peak the trimmers if the indicated voltage is not more than 2 volts. If it is more than 2 volts, detune trimmer toward minimum capacitance, until the voltage reads 2. See figure 5-1.

(1) Turn receiver on. Set bandswitch on band 30; then tune trimmer marked 30 according to the procedure in paragraph (c), above.

(2) Repeat, tuning trimmer marked 28, with bandswitch on band 28.

(3) Repeat on even bands from 26 through 14, tuning correspondingly marked trimmers.

(4) Repeat with bandswitch on band 1. Adjust trimmer labeled B.C. That is nearer V105.

(d) Remove 470K-ohm resistor from V102. Connect the resistor to pin 1 of V103. Connect VTVM between free end of resistor and chassis.

(e) Place bandswitch on band 1. Tune for maximum indication on VTVM the trimmer marked B.C. that was not previously tuned.

5.3.4. 100 KC CALIBRATION OSCILLATOR ALIGNMENT. - Calibrate the 100-kc calibration oscillator by means of the CAL trimmer, C224, located on the front panel, using a primary frequency standard. D-c grid voltage on V104, as indicated on a d-c VTVM should be a negative 15-30 volts minimum.

5.3.5. FIXED 500 KC I-F AMPLIFIER ALIGNMENT. - Connect signal generator between pin 7 of V106 and chassis. Connect one end of a clip lead to output of 100-kc calibration oscillator at C173. Hold the other end near grid of V106. Be sure BFO is in OFF position. Set signal generator to zero beat at 500 kc. Turn off 100-kc calibration oscillator and remove clip lead. Connect a d-c VTVM from the diode load resistor R151 to chassis. Place SELECTIVITY switch in "O" position. Select the 3 kc mechanical filter.

(a) Tune L301 by adjusting the slug for maximum indication on VTVM. Keep diode load voltage below 3 volts by adjusting signal generator output.

(b) Connect detuning network from plate of V108 to chassis. Tune secondary of T104 for maximum indication on VTVM.

(c) Connect detuning network to terminal 4 of T104. Tune primary of T104 for maximum indication on VTVM.

(d) Connect detuning network to plate of V109. Tune secondary of T105 for maximum indication on VTVM.

(e) Connect detuning network to terminal 4 of T105. Tune primary of T105 for maximum indication on VTVM.

(f) Remove detuning network from terminal 4 of T105. Tune T101 for maximum VTVM indication.

(g) If the BFO PITCH knob has never been off the shaft during the life of the receiver, align the BFO as follows: Turn BFO on. Set the line on the BFO PITCH knob at the fiducial mark on the panel. Adjust core in T106 (figure 5-1) to zero beat.

If the BFO PITCH knob has ever been off the shaft, align the BFO as follows: Turn BFO on. Adjust core in T106 to produce a beat note. Line up the knob with the panel mark and with the mid-range point of the BFO pitch capacitor by turning the knob to either the right or the left of the fiducial panel mark until pitch of beat note rises to a maximum. Leave knob exactly at point of maximum pitch. BFO PITCH capacitor plates are now either all in or all out. Loosen set screws in BFO PITCH knob. Rotate knob on shaft until knob mark is 90° from panel mark. Tighten set screws. Set knob mark at fiducial mark on panel. BFO PITCH capacitor is now at mid-range. Adjust core of T106 to zero beat. (A method of aligning the BFO without a signal generator is given in paragraph 5.3.6. below).

(h) Align T102 as follows:

(1) Use an oscilloscope and a frequency-modulated signal generator having a sweep rate of four cycles per second, a frequency excursion of about 20 kc and a carrier frequency between 1.5 and 3.5 mc.

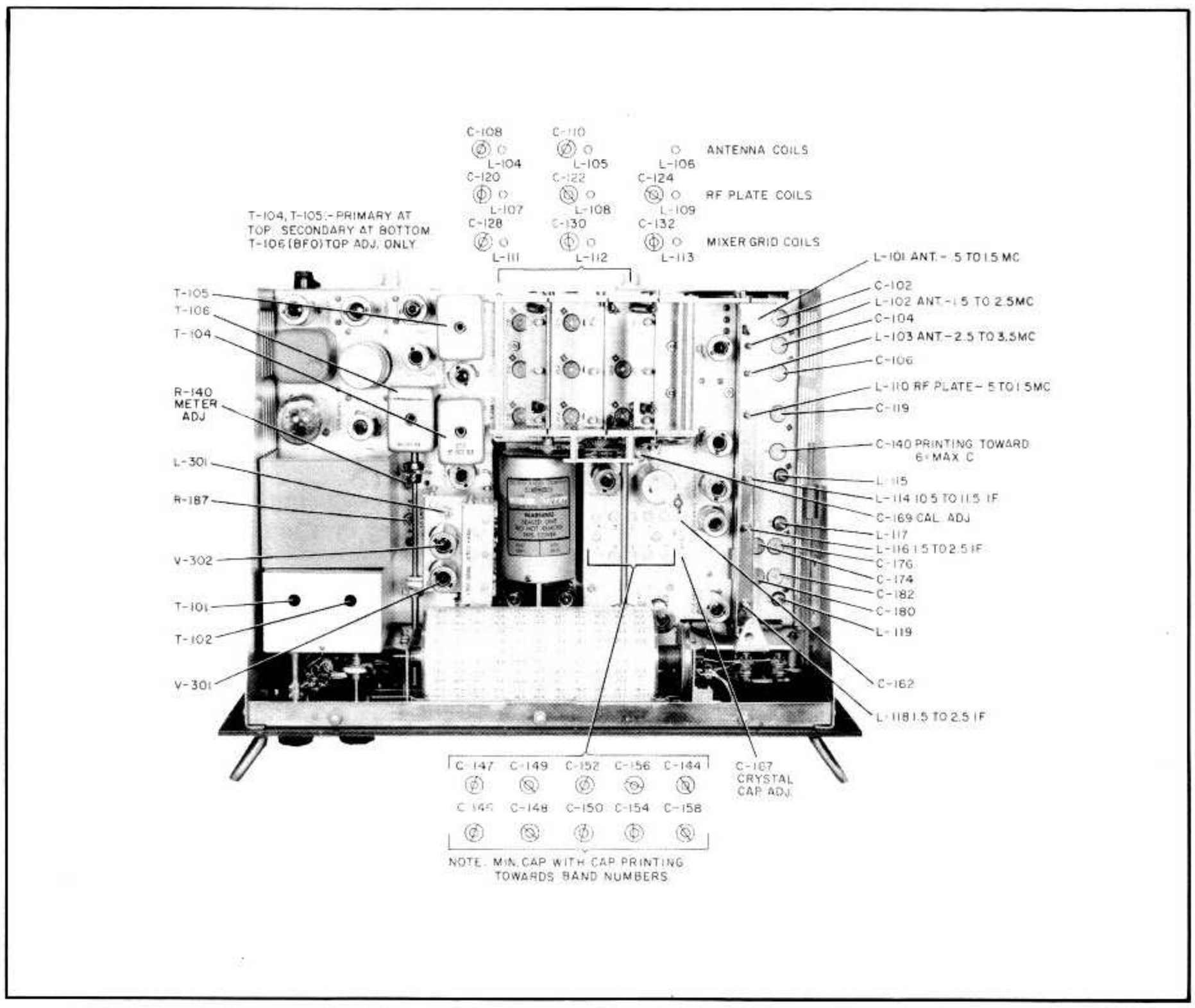

Figure 5-1. 51J-4 Alignment Adjustments

(2) Line up the crystal filter PHASING control knob with the panel mark and with the mid-range position of the phasing capacitor. To accomplish this, with the aid of a flashlight look into the right-hand hole in the top of the crystal filter cover (see figure 5-1) in order to see the plates of the phasing capacitor. Turn the PHASING control until the rotor plates are straight down toward the bottom of the receiver, i.e., until the rotor plates completely engage the bottom set of stator plates. Loosen set screws in PHASING control knob. Set knob line 90° to the left of the panel mark. Tighten set screws. Turn knob to panel mark. Phasing capacitor is now at mid-range.

(3) Connect the frequency modulated signal generator lead to pin 7 of V106. Connect oscilloscope lead to junction of R150 and R152. Turn on generator and oscilloscope and allow them to warm up.

(4) Turn SELECTIVITY switch to position 1. Select 3 kc filter, turn AVC off, LIMITER off, BFO off, CALIBRATE off and AUDIO GAIN to position 0. Tune receiver to carrier frequency of signal generator, which should be between 1.5 and 3.5 mc.

(5) Turn RF GAIN to mid-range and synchronize scope. Two fairly symmetrical peaks should appear on the scope screen. If they do not, adjust receiver tuning, RF GAIN and oscilloscope controls until they do appear. Each of these peaks is essentially an i-f response curve.

(6) Rotation of the PHASING control to the left should cause a rejection notch to appear at one side of each peak. If this notch does not appear, set the PHASING control about one-eighth turn to the left of center and adjust the core in top of T102 (accessible through the right-hand hole in the crystal filter cover) until it does appear and is well-defined

on the scope screen. Adjust until no evidence of a damped oscillation remains.

(7) Turn PHASING control about one-eighth turn to the right of center. The rejection notch should appear at the other side of each peak, and, without further adjustment, should be well-defined and without evidence of a damped oscillation. If this is not the case, adjust T102 core slightly.

(8) Repeat steps (6) and (7) until the notch obtained in one of the steps looks symmetrical with respect to the notch obtained in the other step and gives no evidence of a damped oscillation.

(9) - ALTERNATE METHOD - T102 may be aligned without the FM Signal Generator and oscilloscope by use of a regular signal generator and a d-c VTVM as follows: - Perform step (2) above. Connect 1.5 to 3.5-mc signal generator output to pin 7 of V106. Connect VTVM to diode load. Turn SELECTIVITY control to position 4. Tune the receiver to the input signal and adjust the fiducial line on KILOCYCLE dial so that it is placed directly over a scale reading for reference purposes.

Place SELECTIVITY control in position 1, select the 6 kc mechanical filter, then set KILOCYCLE dial 3-kc off reference point (either direction). At this point, tune T102 for a peak reading on the voltmeter.

Set KILOCYCLE dial 3-kc off reference in the opposite direction to that above and again adjust T102 for peak reading on voltmeter. Carefully note the direction and amount of this second adjustment and set the T102 adjustment midway. T102 is now approximately aligned for correct crystal phasing.

5.3.6. ALTERNATE BFO ALIGNMENT METHOD. - The following paragraphs describe how to align the BFO when a signal generator is not available. For the standard alignment procedure, which requires a signal generator, refer to paragraph 5.3.5. above for the set-up, and 5.3.5.(h) for the procedure.

(a) Disconnect antenna from terminal at rear of chassis. Turn 100-kc crystal oscillator on and BFO on.

(b) Tune receiver to a 100-kc check point on bands 2 or 3. For example, tune receiver to 2.0 mc.

(c) Line up the knob with the panel mark and with the mid-range point of the BFO PITCH capacitor as follows: If the BFO PITCH knob has never been removed from the shaft during the life of the receiver, turn the knob until the knob mark lines up with the panel mark on the receiver. If the BFO PITCH knob has ever been removed from the shaft, adjust the core in T106 to produce a beat note. Turn BFO PITCH knob either to the right or to the left of the panel mark until the beat note's pitch rises to a maximum. Leave knob exactly at point of maximum pitch. BFO PITCH capacitor plates are now either all in or all out. Loosen set screws in BFO PITCH knob. Rotate knob on shaft until knob mark is 90° from panel mark. Tighten set screws. Turn knob to mark on panel. BFO PITCH is now at mid-range.

(d) Tune receiver at least 10 kc off of any 0.1 megacycle point on bands 2 or 3 and turn up AUDIO GAIN until a constant pitch beat note is audible. If the constant pitch beat note is not audible, adjust tuning core in top of T106 until it is. Make certain that this is the correct note by turning the KILOCYCLE dial ±10 kc and noting whether the pitch of the beat remains constant. This constant pitch beat note, which occurs only on bands 2 and 3, is produced by a small amount of fifth harmonic from the 100-kc oscillator that leaks into the i-f strip through the second mixer stage and beats with the signal from the BFO. Because of the superior strength of the calibration beat note in the vicinity of a 100 kc check point, this constant pitch beat note is most audible about half-way between check points.

(e) Adjust tuning core of T106 for zero beat. The BFO frequency is now 500 kc when the BFO PITCH knob is set at the fiducial mark on the panel.

5.3.7. 500 KC I-F PERFORMANCE MEASUREMENTS.

(a) SENSITIVITY. - With AVC turned OFF apply a 500-kc signal from signal generator between pin 7 of V106 and chassis. (Calibration of the signal generator should be checked as in 5.3.5.) Connect VTVM from diode load resistor and chassis. The input to pin 7 of V106 at 500 kc should be within the range of 25 to 40 uv for a 4-volt reading at the diode load.

(b) SELECTIVITY. - Adjust the output level of the signal generator for 4 volts at the diode load. Note the signal generator output reading at this setting. This voltage and the 4-volt diode load reading are reference voltages. Proceed as follows:

(1) Increase the output level of the signal generator to twice the previously noted voltage (6-db increase). Detune signal generator on either side of the initial 500-kc setting until the diode load voltage drops back to the 4-volt reference. The resulting change in input frequency is the measure of selectivity at 6-db down.

(2) Reset the signal generator frequency to the 500-kc reference and adjust the output level of the signal generator 1000 times (60 db increase), and proceed as in step (1) to determine the selectivity at 60 db down.

(3) The over-all selectivity specifications are:

With 1.4 kc filter in circuit

Position	6 db down	60 db down
0	1.2 to 1.6 kc	NMT 4.0 kc
1	1.3 to 1.55 kc	NMT 3.5 kc
2	.8 to 1.2 kc	NMT 3.0 kc
3	.3 to .5 kc	NMT 2.65 kc
4	.1 to .3 kc	NMT 2.5 kc

With 3.1 kc filter in circuit

0	2.80 to 3.40 kc	NMT 8.5 kc
1	2.25 to 2.75 kc	NMT 6.4 kc
2	1.2 to 1.5 kc	NMT 5.5 kc
3	.3 to .5 kc	NMT 5.25 kc
4	.1 to .3 kc	NMT 5.0 kc

With 6.0 kc filter in circuit

0	5.7 to 6.3 kc	NMT 14.4 kc
1	3.0 to 4.0 kc	NMT 11.5 kc
2	1.25 to 1.6 kc	NMT 11.0 kc
3	.5 to .7 kc	NMT 10.0 kc
4	.3 to .5 kc	NMT 9.5 kc

5.3.8. ALIGNMENT OF DIALS WITH VFO.

(a) MEGACYCLE DIAL POINTER. - It is very unlikely that the pointer on the MEGACYCLE dial will become inaccurate through normal use of the receiver. However, if the dial pointer has accidently been slipped with respect to the cord, reset it as follows: Take off escutcheon plate; then rotate KILOCYCLE knob counterclockwise until it hits the mechanical stop. Then rotate it a fraction of a turn clockwise until the zero-zero mark lines up with the fiducial. From this point rotate KILOCYCLE knob exactly five turns clockwise. Grasp the dial cord and slide the MEGACYCLE pointer along it to the center frequency of the band. For example, if the receiver is set at band 2, set pointer exactly at 2.0 mc. Replace escutcheon plate. Should the position of the drum incorrectly line up the scales with the escutcheon opening, correct by loosening the two set screws on the drum hub and turning drum on shaft to correct position.

(b) KILOCYCLE DIAL. - If the KILOCYCLE dial reading is incorrect first determine the magnitude and direction of the errors then correct them according to the procedures outlined below. To determine the nature of the errors, set the receiver on band 2 with the BAND CHANGE knob. Set KILOCYCLE fiducial line to center mark on escutcheon opening by turning ZERO ADJ knob. Set receiver at 1.5 mc. Set BFO exactly at 500 kc as in paragraph 5.3.6. Turn on the 100 kc oscillator with CALIBRATE switch. Turn KILOCYCLE knob to zero beat. Note the magnitude and direction of error in the KILOCYCLE dial reading. Tune receiver to 2.5 mc. With BFO still set at exactly 500 kc, turn KILOCYCLE knob to zero beat. Again, note magnitude and direction of error in KILOCYCLE dial reading.

(1) If the KILOCYCLE dial reading is incorrect by less than 3 kc in the same direction by the same amount at both ends of the MEGACYCLE dial, correct as follows:

a. Be sure BFO is set at 500 kc as in paragraph 5.3.6.

b. Tune the receiver to zero beat at some 100 kc check point on the dial.

c. Set KILOCYCLE fiducial line to zero-zero on the KILOCYCLE dial by turning the ZERO ADJ knob.

(2) If the KILOCYCLE dial reading is incorrect by more than 3 kc in the same direction by the same amount at both ends of the MEGACYCLE dial, correct as follows:

a. Be sure BFO is set at 500 kc as in paragraph 5.3.6.

b. Tune to zero beat at 1.5 mc.

c. Set KILOCYCLE fiducial line to center index mark on escutcheon opening by turning ZERO ADJ knob.

d. Loosen set screws in the circular KILOCYCLE dial and set to zero-zero. Tighten set screws.

(3) If the two errors in the KILOCYCLE dial reading are either opposite in direction or different in size, it indicates that the VFO end points have drifted. Correct as follows:

a. Be sure BFO is set at 500 kc as in paragraph 5.3.6. Tune receiver to zero beat at 1.5 mc on band 2.

b. If the zero-zero mark on the KILOCYCLE dial lies within the lines on the escutcheon opening, set KILOCYCLE fiducial line to zero-zero on the KILOCYCLE dial by turning the ZERO ADJ knob.

c. If the zero-zero mark lies outside the lines on the escutcheon opening, loosen set screws in the KILOCYCLE dial. Set fiducial to the center line in the escutcheon opening. Rotate KILOCYCLE dial until zero-zero mark lines up with the fiducial. Tighten set screws.

d. Rotate KILOCYCLE knob approximately ten turns to zero beat. This procedure tunes the receiver to 2.5 mc.

e. Now note the error in the KILOCYCLE dial reading.

f. If this error is less than ±3 kc, set the fiducial to 2.5 mc by turning the ZERO ADJ knob. This procedure sets the point of maximum accuracy at 2.5 mc. If maximum accuracy is desired at some other check point in the band, tune the receiver to zero beat at the desired check point. Then adjust fiducial to zero-zero on the KILOCYCLE dial.

g. If this error is more than ±3 kc, refer to paragraph 5.3.15. for instructions.

(c) VFO SHAFT. - Check the vfo frequency against a known source to determine whether the vfo shaft has been displaced a full turn and thereby has shifted the vfo frequency exactly 100-kc. Using a signal generator having an accuracy of ±1 percent of ±20 kc or another 51J-4 known to be properly aligned, check as follows:

(1) If a signal generator is used set the receiver bfo at exactly 500 kc as in paragraph 5.3.6. Turn the 100-kc oscillator off. Connect the output of the signal generator to pin 7 of V106 with a clip lead. Set the generator at 2.0 mc. Tune the receiver to zero beat with the bfo at about 2.0 mc. (The vfo is now set at approximately 2.5 mc.) If the vfo shaft is displaced a full turn, zero beat will occur at approximately 1.9 mc or 2.1 mc instead of 2.0 mc. For exact setting of the receiver, remove the signal generator and connect a clip lead from pin 7 of V106 to the 100-kc oscillator output at C173. Turn on the 100-kc oscillator and tune receiver to zero beat with the bfo.

(2) If an accurately aligned 51J-4, hereafter called the test receiver, is used, couple the antenna of the test receiver to the output of the vfo being tested. Set test receiver bfo at 500 kc as in paragraph 5.3.6. Tune test receiver dials to 2.5 mc by zero beating with the bfo. Tune the receiver containing the vfo being checked to where zero beat is observed in the test receiver output. If the shaft of the vfo being checked has been displaced a full turn, the zero beat will occur when the receiver being checked is tuned to 1.9 or 2.1 mc instead of 2.0 mc.

(3) If steps (1) or (2) above reveal that the vfo shaft is displaced a full turn, note whether the zero beat observed was above or below 2.0 mc. and loosen the set screws in the vfo coupler. The set screws are accessible from the bottom of the chassis. NOTE--The vfo shaft will have to be turned to gain access to the screws. The point at which the second

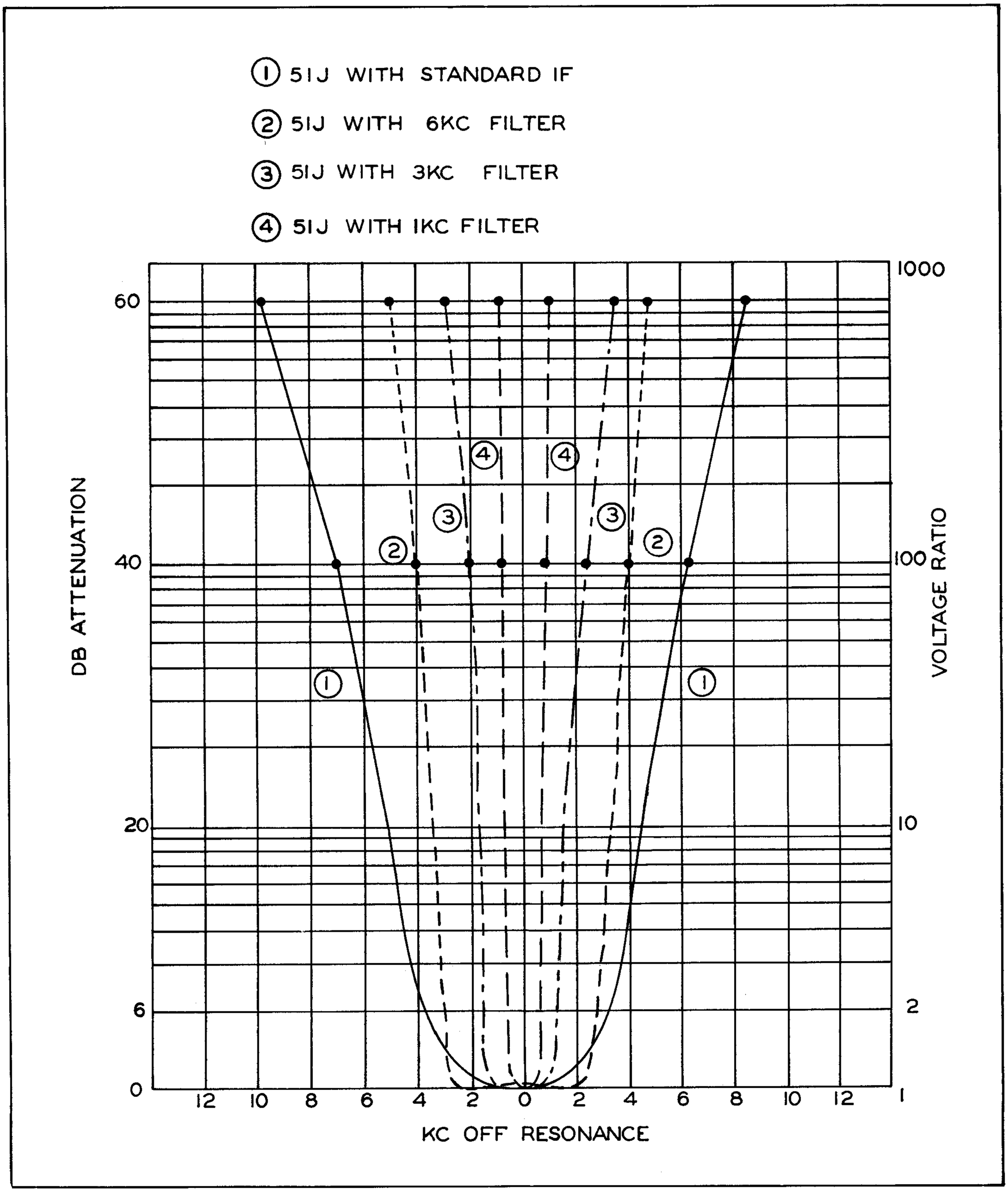

Figure 5-2. 51J-4 Selectivity Curves

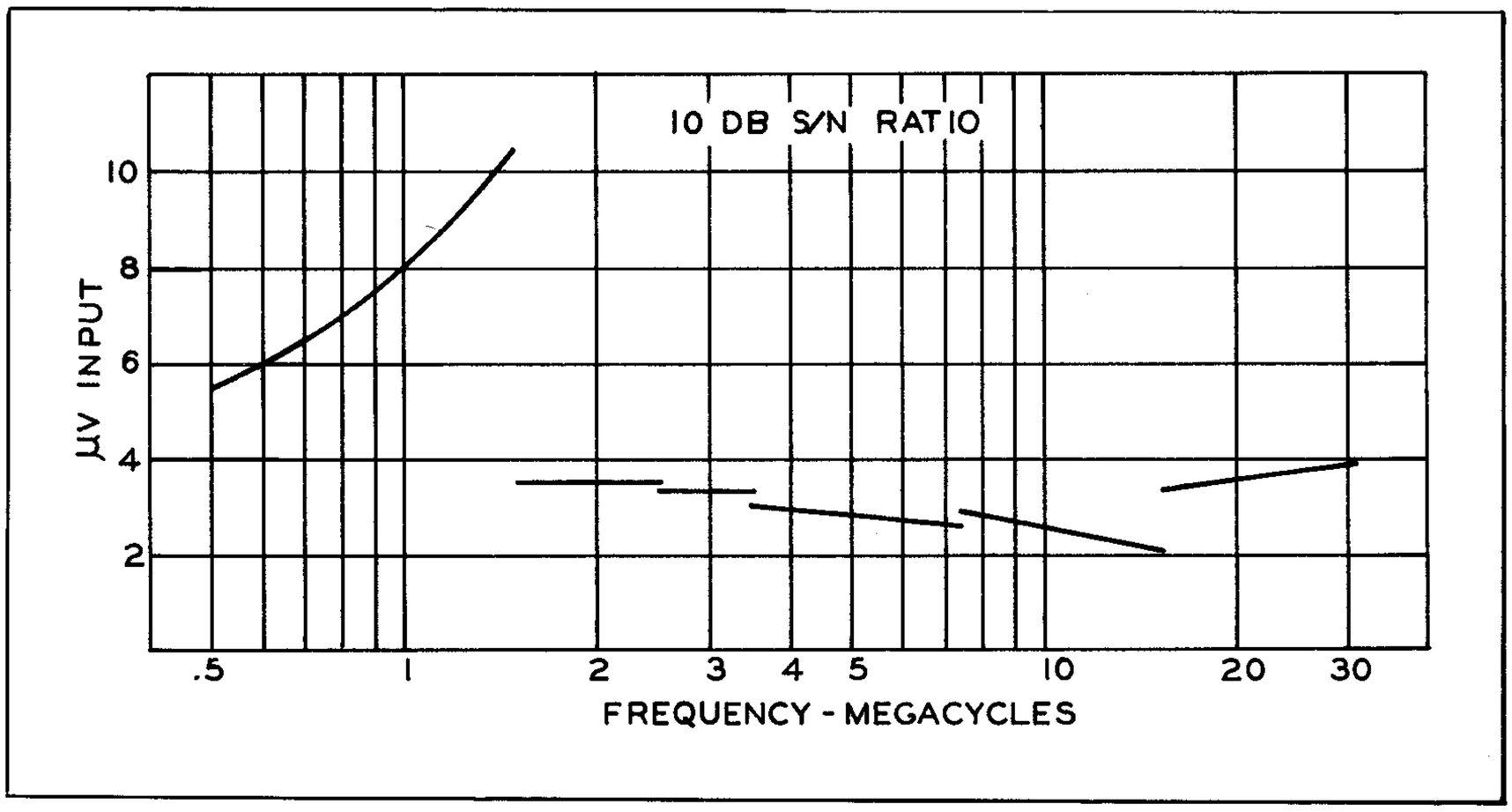

Figure 5-3. 51J-4 Sensitivity Curve

screw is loosened must be noted, since the dial reading at this point is the reference for the 100-kc correction to be made.

Hold the vfo shaft rigid at this position and set the receiver dials to read 100 kc higher than the reference setting if zero beat ocurred at 1.9 mc in steps (1) or (2), or 100-kc lower than the reference setting if zero beat occurred at 2.1 mc. Tighten screws in coupler and check setting. Additional fine adjustment can be made by moving the KILOCYCLE dial on the shaft or moving the fiducial line on the KILOCYCLE dial opening.

5.3.9. VARIABLE I-F ALIGNMENT AND RF ALIGNMENT BAND 2.

(a) Connect signal generator in series with a 47 ohm resistor and a 100 uuf capacitor to the ANTENNA terminal. Connect VTVM between DIODE LOAD test point and chassis. Switch receiver to band 2. Set dial to read 1.6 mc. Set ANT TRIM to midrange.

(b) Turn BFO on and set at 500 kc as in 5.3.6. Set signal generator to zero beat at 1.6 mc. Turn BFO off. Adjust output of signal generator to give some value of diode load voltage below 5 volts. Tune slugs marked 1.6 (in L116, L118 and L102) for a maximum indication while adjusting the signal generator to keep diode load voltage below 5 volts.

(c) Set dial to read 2.4 mc. Set generator to zero beat at 2.4 mc with BFO. Turn BFO off. Tune adjustments marked 2.4 (trimmer capacitors C174, C180 and C104) for a maximum indication, keeping diode load voltage below 5 volts.

(d) Repeat tuning procedures at 1.6 and 2.4 mc until no further increase in output can be obtained.

NOTE

IN THE FOLLOWING RF ALIGNMENT PROCEDURES KEEP DIODE LOAD VOLTAGE BELOW 5 VOLTS AS IN PARAGRAPH 5.3.9.(b) ABOVE, AND BFO SET AT 500 KC AS IN PARAGRAPH 5.3.6.

5.3.10. VARIABLE I-F ALIGNMENT AND RF ALIGNMENT BAND 3.

(a) Connect the signal generator and VTVM as in step 5.3.9.(a). Set bandswitch to band 3.

(b) Set dial to read 2.6 mc. Set signal generator to zero beat at 2.6 mc with BFO. Turn BFO off. Adjust tuning cores marked 2.6 (in L117, L119 and L103) for a maximum indication.

(c) Set dial to read 3.4 mc. Set signal generator to zero beat at 3.4 mc with BFO. Turn BFO off. Adjust trimmer capacitors marked 3.4 (C176, C182 and C106) for a maximum indication.

(d) Repeat tuning procedures at 2.6 and 3.4 mc until no further increase in output can be obtained.

5.3.11. RF ALIGNMENT BANDS 4-7.

(a) Connect signal generator and VTVM as in step 5.3.9.(a). Set bandswitch to band 4.

(b) Set dial to read 4.0 mc. Set signal generator to zero beat at 4.0 mc with BFO. Turn BFO off. Adjust tuning cores marked 4.0 (in L104, L107 and L111) for maximum indication.

(c) Set bandswitch to band 7. Set dial to read 7.0 mc. Set signal generator to zero beat at 7.0 mc with BFO. Turn BFO off. Tune trimmer capacitors marked 7.0 (C108, C120 and C128) for maximum indication.

(d) Repeat tuning procedures at 4.0 mc and 7.0 mc until no further increase in output can be obtained.

5.3.12. RF ALIGNMENT BANDS 8-15.

(a) Connect signal generator and VTVM as in step 5.3.9.(a).

(b) Set bandswitch to band 8. Set dial to 8.0 mc. Set signal generator to zero beat with BFO at 8.0 mc. Turn BFO off. Adjust tuning cores marked 8 (L105, L108 and L112) for maximum indication.

(c) Set bandswitch to band 15. Set dial to read 15.0 mc. Set signal generator to zero beat with BFO at 15.0 mc. Turn BFO off. Tune trimmer capacitors marked 15 (C110, C122 and C130) for maximum indication.

(d) Repeat tuning procedures at 8.0 mc and 15.0 mc until no further increase in output can be obtained.

5.3.13. RF ALIGNMENT BANDS 16-30.

(a) Connect signal generator and VTVM as in step 5.3.9.(a).

(b) Set bandswitch to band 16. Set dial to 16.0 mc. Set signal generator to zero beat with BFO at 16.0 mc. Turn BFO off. Adjust tuning cores marked 16 (in L106, L109 and L113) for a maximum indication.

(c) Set bandswitch to band 30. Set dial to 30.0 mc. Set signal generator to zero beat with BFO at 30.0 mc. Turn BFO off. Adjust trimmer capacitors C124, C132 and ANT TRIM for a maximum indication.

(d) Repeat tuning procedures at 16.0 and 30.0 mc until no further increase in output can be obtained.

5.3.14. RF ALIGNMENT BAND 1.

(a) Connect signal generator and VTVM as in step 5.3.9.(a).

(b) Set bandswitch to band 1. Set dial to 0.6 mc. Set generator to zero beat with BFO at 0.6 mc. Turn BFO off. Adjust core in L114 so that it is in approximately the same position in the inductor as the cores in L116 and L118. Adjust cores marked 0.6 (in L101 and L110) for a maximum indication. Adjust trimmer capacitor marked 0.6 (C140) for a maximum indication.

NOTE

TWO PEAKS MAY BE FOUND WHEN TUNING C140. USE THE PEAK THAT REQUIRES THE HIGHER VALUE OF CAPACITANCE. Refer to C140 in figure 5-1.

(c) Set dial to 1.4 mc. Set signal generator to zero beat with BFO at 1.4 mc. Turn BFO off. Tune trimmers marked 1.4 (C102 and C119) for a maximum indication. Adjust core marked 1.4 (in L115) for a maximum indication.

(d) Repeat tuning procedures at 0.6 and 1.4 mc until no further increase in output can be obtained.

5.3.15. VFO ALIGNMENT.

(a) GENERAL. - During manufacture of the VFO the frequency-determing elements are hermetically sealed within the outer cylindrical cover while they are being held at a high temperature. This drives out practically all moisture and creates a partial vacuum within the sealed compartment. Because of the method of fabrication and the efficiency of design, it is quite unlikely that the VFO will become misaligned through normal use or treatment. However, if it does become sufficiently misaligned, as indicated by the procedure outlined in paragraph 5.3.8.(b)(3), it must be returned to the factory for permanent alignment. Because alignment procedure involves breaking of the hermetic seal by removal of a small plug, the future stability of the VFO will be seriously impaired if conditions under which it was manufactured are not duplicated during alignment. Therefore, it is possible to align the VFO only temporarily without sending it back to the factory. If the VFO is

to be sent back to the factory refer to paragraph 5.4. for instructions on removal. This temporary alignment can be performed by a qualified and properly equipped service technician, but should be attempted only in case of emergency. All components not contained within the sealed cover can be maintained in the field.

WARNING

DO NOT, UNDER ANY CIRCUMSTANCES, ATTEMPT TO REMOVE THE OUTER CYLINDRICAL COVER. THIS NOT ONLY BREAKS THE HERMETIC SEAL BUT EXPOSES THE FREQUENCY CORRECTOR MECHANISM AND THE CAREFULLY COMPENSATED FREQUENCY-DETERMINING ELEMENTS.

(b) PROCEDURE.

(1) Before aligning the VFO be sure that the BFO is set at 500 kc as in paragraph 5.3.6., that the 500-kc i-f channel is aligned and that the 100-kc oscillator is turned off.

(2) Use a signal generator having an output of 1.5 mc with better than ±25 kc accuracy.

(3) Loosen set screws in the flexible VFO coupler, and slide the coupler hubs apart. Remove the receiver's front panel and the VFO mounting screws. Pull out the VFO and carefully allow it to hang on the connecting wires. Mount a small circular dial on the VFO shaft. This dial must have a linear scale from 0 to 100 completely around its periphery. Affix a small wire for use as a pointer on one of the VFO mounting screws. One division of the dial will equal one kilocycle.

(4) Turn the receiver ON and short the antenna terminal to chassis. Because none of the receiver's variable tuned circuits are used in this procedure, leave the receiver dials at whatever frequency they happen to be on when the receiver is turned on.

(5) Couple the 1.5 mc output from the signal generator to pin 1 of V106.

(6) Find the low frequency endpoint (2.0 mc) of the VFO by turning the VFO shaft clockwise to the last zero beat obtainable in that direction.

CAUTION

DO NOT FORCE THE VFO SHAFT BY ATTEMPTING TO TURN IT FURTHER WHEN IT REACHES THE STOP AT EITHER END OF THE RANGE.

(7) The VFO setting is now within 20 kc of 2.0 mc and must be adjusted more accurately as follows: Uncouple signal generator from pin 1 of V106. Connect a clip lead from the 100 kc oscillator at C173 to pin 1 of V106. Turn 100-kc oscillator on. Carefully rotate VFO shaft to the nearest zero beat. VFO setting is now exactly 2.0 mc. Place VFO dial pointer at zero, being careful to retain the zero beat setting.

(8) Rotate the VFO shaft exactly 10 turns in a counterclockwise direction, counting exact turns with VFO shaft dial. Find zero beat by turning the VFO shaft a few divisions toward either side of the 10-turn mark.

(9) If zero beat occurs on either side of the 10-turn mark, note the magnitude and direction of the error by counting divisions between zero and the pointer. Multiply this number of error divisions by 1.5.

(10) If zero beat occurs at less than 10 turns, rotate the VFO shaft counterclockwise by the number of divisions arrived at in step (9) (1.5 times the error divisions).

(11) If zero beat occurs at more than 10 turns, rotate the VFO shaft clockwise by the number of divisions arrived at in step (9) (1.5 times the error divisions).

(12) Remove the hex plug from the front of the oscillator. Using the outer part of the special VFO adjustment tool illustrated in figure 5-7, loosen the lock nut that is visible when the hex plug is removed. Insert the screwdriver portion of the VFO tool into the outer portion. Adjust the timmer screw by turning the screwdriver until zero beat is again reached. Tighten lock nut, being careful to retain zero beat.

(13) The high and low end (2.0 and 3.0 mc) zero beat positions should now be exactly ten turns apart. If this is not the case, repeat the above procedure until they are. It will be necessary to zero the dial pointer at the initial zero beat position each time this procedure is repeated. Be sure to tighten the lock nut after making each trimmer adjustment. Be careful not to lose the endpoints by counting incorrectly or forgetting the count. If they are lost turn off the 100-kc oscillator and start the procedure over at step (5).

(14) After separating the 2.0 and 3.0 mc endpoints of the VFO by exactly 10 turns, replace the hex plug, put the VFO in the receiver and replace the front panel. Align the receiver dials with the VFO according to the procedure outlined in paragraph 5.4.(b). It is not necessary to readjust the r-f and i-f amplifiers for small changes in the VFO adjustment.

(c) EXAMPLES. - The following examples illustrate the procedure outlined in paragraph (b).

NOTE

DO NOT ATTEMPT TO FOLLOW THESE EXAMPLES AS INSTRUCTIONS. THEY ARE PURELY HYPOTHETICAL INCLUDED FOR ILLUSTRATIVE PURPOSES ONLY.

(1) Zero the pointer at the low frequency endpoint (2.0 mc) of the VFO. Read zero on the shaft dial. Rotate shaft exactly 10 turns counterclockwise. Again read zero on the dial. A beat note is audible at this setting. Find zero beat by turning VFO shaft by 4 divisions clockwise. This indicates that the endpoints are 4 divisions less than 10 turns apart. Multiply the 4 error divisions by 1.5 to arrive at 6. Rotate VFO shaft counterclockwise by 6 divisions since zero beat occurs at less than 10 turns. Turn trimmer screw to zero beat. Rotate VFO shaft exactly 10 turns clockwise to check whether the endpoints are now exactly 10 turns apart. If they are not, repeat procedure in paragraph (b) until they are.

(2) Zero the pointer at the low frequency endpoint (2.0 mc) of the VFO. Read zero on the shaft dial. Rotate shaft exactly 10 turns counterclockwise. Again read zero on the dial. A beat note is audible at this setting. Find zero beat by turning VFO shaft by 5 divisions counterclockwise. This indicates that the endpoints are 5 divisions more than 10 turns apart. Multiply the 5 error divisions by 1.5 to arrive at 7.5. Rotate VFO shaft clockwise by 7.5 divisions since zero beat occurs at more than 10 turns. Turn trimmer screw to zero beat. Rotate VFO shaft exactly 10 turns clockwise to check whether the endpoints are now exactly 10 turns apart. If they are not, repeat procedure in paragraph (b) until they are.

5.3.16. ADJUSTMENT OF L124. - Reach L124 from the bottom of the chassis. Adjust as follows:

(a) Turn BFO ON and tune in the spurious signal at 1250 kc.

(b) Adjust L124 for greatest attenuation of the spurious signal.

5.3.17. INTERMEDIATE AMPLIFIER GAIN ADJUSTMENT. - The current models of 51J-4 are equipped with a variable resistor for adjusting the intermediate amplifier gain. This resistor is R187, a screwdriver adjusted control that is reached from the top of the chassis. This control is set and locked at the factory for optimum results. If aging or changing tubes makes it necessary to readjust this control, use the following method:

(a) Attach a 50-ohm load to the IF OUTPUT jack, J104.

(b) Inject 3 microvolts unmodulated into the ANTENNA input jack, J101, with the receiver and generator tuned to 2.1 mc.

(c) Adjust the i-f gain control R187 until 270 millivolts are obtained at the IF OUTPUT jack.

5.4. COMPLETE VFO REMOVAL AND REPLACEMENT.

(a) REMOVAL. - If the vfo has to be completely removed from the receiver for servicing, proceed as follows:

(1) Remove the front panel and allow it to swing forward on the wires. (See paragraph 5.6.2. for detailed instructions on removing the front panel.)

(2) Loosen set screws on the vfo coupler. Pull coupler apart and remove the center disk.

(3) Mark the vfo connecting wires so that they may be reconnected correctly. Unsolder the wires.

(4) Remove the three screws that hold the vfo to the gear mounting plate. The upper right screw, as viewed from front of plate, is accessible through a hole in the gear by turning the KILOCYCLE shaft to align the hole over the screw.

(5) Slide the vfo back and tip the rear downward.

(6) Pull the vfo from the receiver.

(b) REPLACEMENT. - To replace a vfo in the receiver, reverse the above procedure. Replace the front panel and knobs; reassemble the vfo coupler. Tighten set screws on the vfo end but do not tighten the set screws on the front end of the coupler. The procedure used in aligning the vfo with the receiver tuning dials is as follows:

(1) Carefully turn the oscillator shaft in a clockwise direction until the stop in the oscillator is reached. (DO NOT FORCE THE SHAFT BEYOND THIS STOP.) Back off one turn.

(2) Set the receiver dials at 1.5 mc (low end of band 2).

(3) Tighten the set screws in the vfo coupler.

(4) Proceed as in paragraph 5.3.8.(c) (VFO SHAFT). The procedure outlined in this paragraph implies correct KILOCYCLE dial readings but a full turn (100 kc) error. However this procedure is applicable to correction of any errors between the dial readings and the vfo shaft position. An example follows:

a. Suppose in 5.3.8.(c) (1 or 2), that zero beat occurs at a reading of 2.153 mc rather than 2.0 (0.153 mc high). At this setting the vfo shaft set screws are not accessible for loosening. The KILOCYCLE dial is turned until the screws can be reached and at the position where the second screw is loosened, the dial readings are 2.0 and 22 (2.022 mc). Since a correction of minus 0.153 mc was indicated from the zero beat dial readings, the vfo shaft is held stationary and the KILOCYCLE dial turned until the reading is 2.022 minus 0.153 mc or 1.869 mc. This is represented by readings of 1.8 on the MEGACYCLE dial and 69 on the KILOCYCLE dial. One vfo coupling screw is now tightened without moving the vfo shaft and the shaft turned until the second screw is accessible for tightening. The dials are then turned to a 2.0 mc reading and zero beat is heard at or very near this point. Fine corrections are then made by adjusting the KILOCYCLE dial position on the shaft or moving the fiducial line.

5.5. DIAL BULB AND STATIC DISCHARGE BULB REPLACEMENT.

5.5.1. DIAL BULB REPLACEMENT. - The lights for the slide rule dial are mounted in sockets which are clipped to the metal structure above the dial. To replace light bulbs, slide the clips off the metal structure and pull out the sockets. Press down on the bulb slightly and turn it a fraction of a turn counterclockwise. When replacing the sockets, press the wires up into the channel. To remove the KILOCYCLE dial light, reach under the drum of the MEGACYCLE dial and grasp the dial light socket; then pull it back far enough to replace the bulb.

5.5.2. STATIC DISCHARGE BULB. - The static discharge bulb, I104, should be replaced if it fails to fire with application of 65 volts ac or 90 volts dc. Test as follows:

(a) Refer to figure 7-4 for location of the bulb.

(b) Unsolder wires from the base of the bulb.

(c) Connect bulb in series with a 30K-ohm resistor to 115-volt source and check to see that bulb fires. If bulb fires replace in mounting. If bulb fails to fire, replace with new bulb to insure receiver protection from high voltages on the antenna.

5.6. DIAL AND BAND CHANGE GEAR MAINTENANCE.

5.6.1. GENERAL. - The replacing and synchronizing of gears in the dial and band change mechanism of this receiver can be a difficult job. It is recommended that the unit be sent to the factory for servicing should any major repairs be required.

WARNING

IF DISASSEMBLY OF THE GEAR UNIT IS CONTEMPLATED, INSTRUCTIONS IN PARAGRAPHS 5.6.2. and 5.6.3. MUST BE FOLLOWED CLOSELY OR IT WILL BE IMPOSSIBLE TO SYNCHRONIZE THE GEARS UPON REASSEMBLY.

5.6.2. DISASSEMBLY OF GEAR BOX.

(a) If the gear box is to be returned to the factory for servicing, proceed as follows:

(1) Set the receiver on its back. Remove the following knobs: SELECTIVITY, PHASING, BFO, PITCH, BAND CHANGE, KILOCYCLE tuning and ANT. TRIM. Remove the collar, tension washer, and flat washer from the KILOCYCLE shaft. Remove the screw securing the standoff to the gear panel. Remove the two collars and the one coupler on the BFO PITCH control shaft. Remove the eight screws that mount the front panel to the receiver frame. Remove the two screws that fasten the megacycle dial to the front panel. Lift the panel off carefully and allow it to hang to one side on the cable wires.

(2) Remove the right-hand end bracket from the chassis.

(3) Loosen set screws in the following couplers: VFO, r-f slug rack and i-f slug rack shafts, all accessible from the top of the receiver, and two band change shafts, accessible from the bottom.

(4) Remove the VFO mounting screws and the gear box mounting screws. Lift the gear box from the receiver.

(b) If repairs are to be made in the field the gear box may either be removed from the receiver or left in, depending on the extent of repairs. If the box is to be removed, turn the MEGACYCLE knob to its clockwise stop and the KILOCYCLE knob to

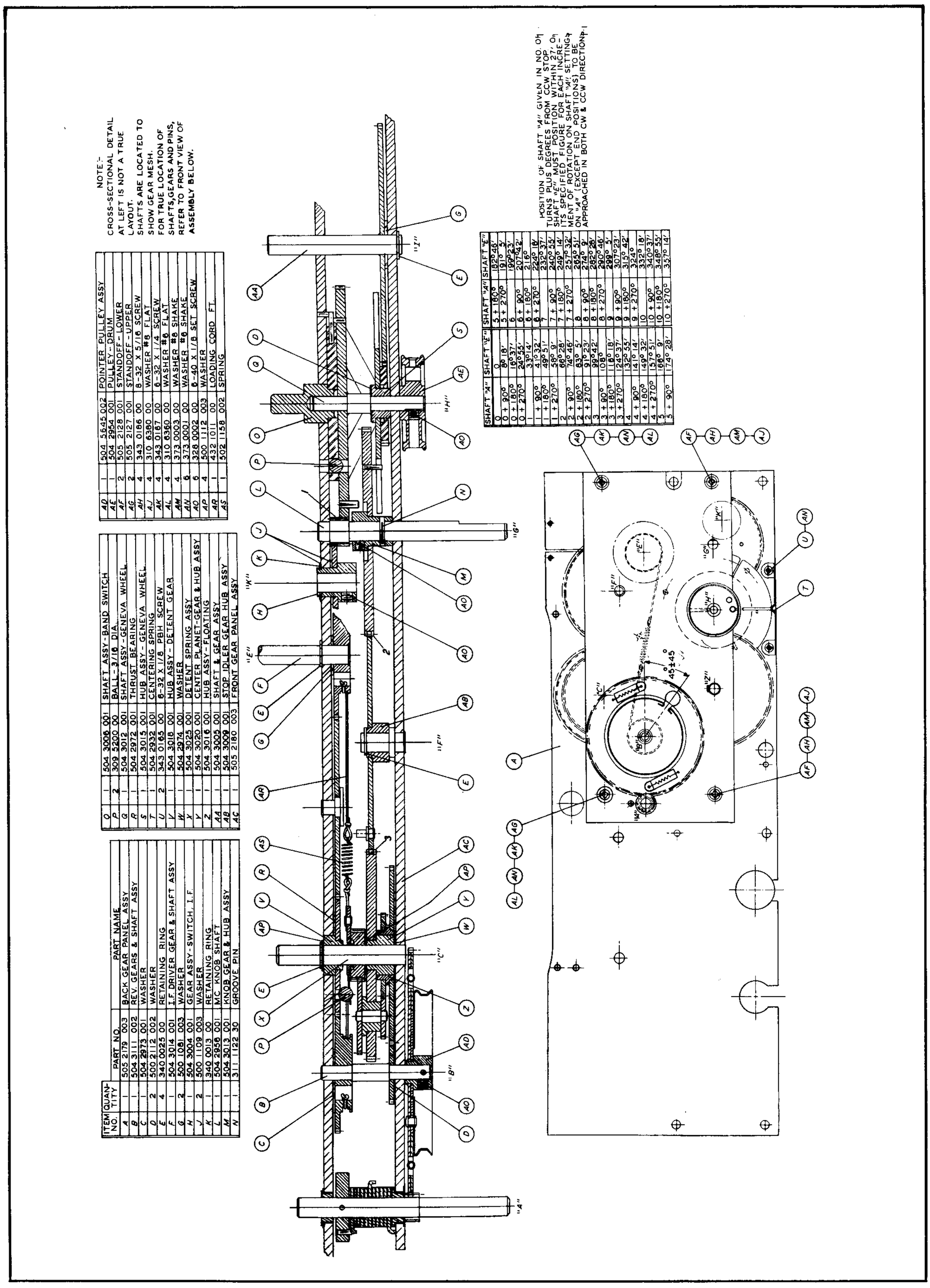

ITEM NO.	QUANTITY	PART NO.	PART NAME
A	1	505 2179 003	BACK GEAR PANEL ASSY
B	1	504 3111 002	REV. GEARS & SHAFT ASSY
C	1	504 2973 001	WASHER
D	2	500 2112 002	WASHER
E	4	340 0025 00	RETAINING RING
F	1	504 3014 001	I.F. DRIVER GEAR & SHAFT ASSY
G	2	500 1081 003	WASHER
H	1	504 3004 001	GEAR ASSY-SWITCH, I.F.
J	2	500 1109 003	WASHER
K	1	340 0013 00	RETAINING RING
L	1	504 2956 001	MC KNOB SHAFT
M	1	504 3013 001	KNOB GEAR & HUB ASSY
N	1	311 1122 30	GROOVE PIN
O	1	504 3006 001	SHAFT ASSY-BAND SWITCH
P	2	309 5200 00	BALL-3/16 DIA.
Q	1	504 3012 001	SHAFT ASSY-GENEVA WHEEL
R	1	504 2972 001	THRUST BEARING
S	1	504 3015 001	HUB ASSY-GENEVA WHEEL
T	1	504 2932 001	CENTERING SPRING
U	2	343 0165 00	6-32 X 1/8 PBH SCREW
V	1	504 3018 001	HUB ASSY-DETENT GEAR
W	1	504 2974 001	WASHER
X	1	504 3025 001	DETENT SPRING ASSY
Y	1	504 3020 001	CENTER PLANET-GEAR & HUB ASSY
Z	1	504 3016 001	HUB ASSY-FLOATING
AA	1	504 3005 001	SHAFT & GEAR ASSY
AB	1	504 3009 001	STOP IDLER GEAR HUB ASSY
AC	1	505 2180 003	FRONT GEAR PANEL ASSY
AD	1	504 5645 002	POINTER PULLEY ASSY
AE	1	504 2954 001	PULLEY-DRUM
AF	2	505 2128 001	STANDOFF-LOWER
AG	2	505 2127 001	STANDOFF-UPPER
AH	4	343 0186 00	8-32 X 5/16 SCREW
AJ	4	310 6380 00	WASHER #8 FLAT
AK	4	343 0187 00	6-32 X 1/4 SCREW
AL	4	310 6360 00	WASHER #6 FLAT
AM	4	373 0003 00	WASHER #8 SHAKE
AN	6	373 0001 00	WASHER #6 SHAKE
AO	6	328 0002 00	6-40 X 1/8 SET SCREW
AP	4	500 1112 003	WASHER
AR	1	432 1011 00	LOADING CORD FT.
AS	1	502 1158 002	SPRING

SHAFT "A"	SHAFT "E"	SHAFT "A"	SHAFT "E"
0	0	5 + 180°	182° 46'
0 + 90°	80° 18'	5 + 270°	191° 5'
0 + 180°	160° 37'	6	199° 23'
0 + 270°	240° 55'	6 + 90°	207° 42'
1	33° 14'	6 + 180°	216°
1 + 90°	41° 32'	6 + 270°	224° 18'
1 + 180°	49° 51'	7	232° 37'
1 + 270°	58° 9'	7 + 90°	240° 55'
2	66° 28'	7 + 180°	249° 14'
2 + 90°	74° 46'	7 + 270°	257° 32'
2 + 180°	83° 5'	8	265° 51'
2 + 270°	91° 23'	8 + 90°	274° 9'
3	99° 42'	8 + 180°	282° 28'
3 + 90°	108°	8 + 270°	290° 46'
3 + 180°	116° 18'	9	299° 5'
3 + 270°	124° 37'	9 + 90°	307° 23'
4	132° 55'	9 + 180°	315° 42'
4 + 90°	141° 14'	9 + 270°	324°
4 + 180°	149° 32'	10	332° 18'
4 + 270°	157° 51'	10 + 90°	340° 37'
5	166° 9'	10 + 180°	348° 55'
5 + 90°	174° 28'	10 + 270°	357° 14'

Figure 5-4. 51J-4 Dial and Bandswitch Gear Box

its counterclockwise stop, and follow the instructions in paragraph 5.6.2.(a); then proceed according to the following steps. If the box is to be left in the receiver, perform steps (1) and (2) under paragraph 5.6.2.(a); then proceed according to the following steps. Refer to figures 4-2 and 5-4 for location of gears and shafts.

(1) Turn shaft G (BAND CHANGE) clockwise to the stop below band 1. Turn shaft A counterclockwise to the stop.

(2) Scribe a mark across the 85-tooth spider gear that carries the planetary gears, and across the 90-tooth stop-pin gear, using the top of the front gear panel as a guide.

(3) Scribe a radial mark, precisely under the Geneva wheel detent, on the 144-tooth gear that has two stop pins attached.

(4) Using the circumference of the Geneva wheel as a guide, scribe a mark on the 85-tooth gear that drives the Geneva wheel.

(5) Scribe a mark through the edge of the small dial cord pulley and the front gear panel.

(6) Remove pin from hub of large dial cord pulley.

(7) Remove large dial cord pulley and gear.

(8) Remove small dial cord pulley.

(9) Remove retaining ring from shaft I (shown as shaft Z in the front view of gear plate in figure 5-4).

(10) Using a pair of right angle TRUARC pliers or two bent (right angle) scribes, remove retaining ring from shaft F.

(11) Measure and record the length of loading spring using a pair of dividers.

(12) Remove four mounting screws from front gear panel.

(13) Remove front gear panel, being very careful not to let shafts ride up with plate. While removing this panel, do not allow gears to unmesh or rotate.

(14) Keep shim washers with respective gears or shafts.

(15) Before moving or disengaging any gears other than the 90-tooth gear on shaft F, scribe a line through detent spring, 48-tooth detent gear, and rear gear panel, and another line through the 52-tooth gear on shaft E and rear gear panel.

(16) Mark all gears being removed in such a manner that they may be identified later for reassembly.

(17) If the overtravel coupler is removed, note that the disk and gear are detented. Do not lose detent ball.

(18) Make all necessary repairs. If any parts that have been scribed are to be replaced, be sure to scribe the new parts in exactly the same manner before placing them in the equipment. If the loading cord is to be replaced, form a small loop at one end of each of the two pieces to provide anchors for the spring. Push free ends of the cords through the proper pulley-holes. Knot the free ends after allowing for five inch lengths of cord between the loops and knots. Coat the knots with Duco cement.

5.6.3. REASSEMBLY OF GEAR BOX. - The following procedure assumes that all gears have been removed, that all repairs have been made, and that the gear and shaft assemblies have been reassembled after repairs were made.

(a) Use AN-G-25 grease on all bearing surfaces during assembly.

(b) If the 74-tooth idler gear whose shaft is riveted to the rear gear panel was removed, replace it first.

(c) Replace a 48-tooth gear and shaft K assembly and shim washers, item J. Replace retaining ring.

(d) Replace 52-tooth gear and shaft E assembly and washer, item G. Line up scribe marks on gear and rear panel. Replace retaining ring.

(e) Replace 48-tooth detent gear, shaft C, detent, and 16-tooth gear assembly. Line up marks on rear panel, 48-tooth gear, and detent spring.

(f) Replace 85-tooth spider gear, 45-tooth, and 25-tooth planetary gear assembly, and shim washer, item AP, on shaft C. Do not move other gears already lined up with the scribe marks.

(g) Replace 48-tooth gear, shaft B, 24-tooth gear assembly, and washers, items C and D as follows:

Wind the loading cord about 1-1/2 turns clockwise on the pulley that is attached to the 52-tooth gear on shaft E. Do not move gears while doing this. Hook spring onto both halves of the loading cord. Insert shaft B into hole on rear plate, but do not yet engage the 48-tooth gear with the detent gear. While holding the 52-tooth gear and shaft E assembly, and the detent gear at their respective scribe marks, rotate shaft B counterclockwise until loading spring stretches to the length measured before disassembly. Engage 48-tooth gear with detent gear while maintaining tension on the loading spring.

(h) Replace the 72-tooth gear and 50-tooth sun gear assembly and shim washer, item W, while holding 85-tooth spider gear so that the scribe mark on it is horizontal (parallel with the top and bottom edges of the gear panels). Keep all other gears set at the scribe marks.

(i) Reassemble overtravel disk with the 144-tooth overtravel gear. Detent the two together with detent ball. Use AN-G-25 grease to hold ball in place.

(j) Replace overtravel assembly, lining up mark on overtravel gear with notch on Geneva detent spring.

(k) Replace 85-tooth gear, shaft G, and 16-tooth gear assembly, lining up arcuate scribe mark with circumference of overtravel gear. (This mark will later line up with the Geneva wheel, but at present it is concentric with the overtravel gear.) Make sure that alignment described in step (h) is maintained.

(l) Replace Geneva wheel and 33-tooth gear assembly and shim washer, item D. Be sure Geneva drive pin is engaged with slot in the Geneva wheel while the Geneva wheel detent is engaged, and that the arcuate scribe mark on the 85-tooth drive gear-tooth drive gear lines up with the circumference of the Geneva wheel.

(m) Replace 99-tooth gear and shaft I assembly, and washer, item G. Position is not critical.

(n) Lay the 90-tooth stop-pin gear in position with the scribe mark horizontal across the top, and collinear with scribe mark on the 85-tooth spider gear (parallel to the top and bottom edges of the gear panels.)

(o) Replace front gear panel as follows: While sliding the panel into position, slide the 90-tooth stop-pin gear on its shaft which is attached to the front panel, being careful to keep scribe mark lined up with the mark on the 85-tooth spider gear. Also keep arcuate mark on the 85-tooth Geneva drive gear lined up with the circumference of the Geneva wheel. Further, keep the mark on the 144-tooth overtravel coupler gear lined up with notch in the Geneva wheel detent. Replace screws in front gear panel.

(p) Check operation of the BAND CHANGE gear. If the gear box has been removed from the receiver, make the check while holding the gear box in a horizontal plane with the front gear panel facing down, so that the 90-tooth stop-pin gear will not fall off during the check. If the gear box has not been removed from the receiver, replace the retaining ring on the 90-tooth stop-pin gear shaft before making the check. Then, in either case, proceed as follows:

(1) Shaft G should now be against the clockwise stop, and should detent when turned counterclockwise approximately 45°. The ball on shaft C will now detent shaft G every 180°.

(2) When shaft G is turned counterclockwise 7-1/2 revolutions, or 15 detent positions from the first detent position, the pin in the 144-tooth gear on shaft H (figure 5-4), and the radial pin on the overtravel disk rotate clockwise until the radial pin just touches or is about to touch the pin in the rear gear panel. Further rotation of shaft G causes the pin in the gear to leave the radial pin that was stopped by the pin in the rear gear panel. Thus the overtravel coupler output shaft, which drives r-f switches S101 through S107 (figure 4-2), rotates 300° for the first 16 detent positions of shaft G and remains at that setting for further counterclockwise rotation of shaft G.

(3) Shaft G should rotate 14 more detent positions or 7 revolutions from the sixteenth detent position, and should hit the counterclockwise stop approximately 45° past the thirtieth detent position. If the stop pins intersect before this, adjust them by changing phase relations of the gears at points 1, 2, and 3, shown in figure 5-4. Before deciding to change the relative positions of these gears, double check the conditions in steps (1), (2) and (3). If instructions in paragraphs 5.6.2. and 5.6.3. were followed precisely, operation of the BAND CHANGE

gear train should meet the conditions set forth in these steps.

(4) The Geneva wheel should turn one notch when shaft G turns counterclockwise from an even-numbered to an odd-numbered detent position. (Count the first detent position from the clockwise stop as number 1.) Thus shaft I should rotate through 14 positions, or 280°, for 30 detent positions, or 14-1/2 turns, of shaft G. The initial position of shaft I should correspond to detent positions 1 and 2 of shaft G, the second shaft I positions should correspond to detent positions 3 and 4 of shaft G, and so on through to the thirtieth detent position of shaft G.

(q) After accomplishing proper operation of the BAND CHANGE gear train, replace the retaining ring on the 90-tooth stop-pin gear shaft.

(r) Replace large dial cord pulley and gear assembly as follows: Turn shaft A to counterclockwise stop. Make sure that the 52-tooth gear on shaft E and the 48-tooth detent gear on shaft C are still set at their respective scribe marks. Place pulley and gear assembly far enough on shaft B to engage the rear section of the split gear with the 15-tooth gear on shaft A. Be sure the groove-pin holes on shaft and hub are lined up and that the pulley slot is within 45° of the position shown in figure 5-4. Rotate front section of split gear so that springs stretch to 3/4 inches. Engage front section with 15-tooth gear on shaft A. Replace groove pin and tighten set screw.

(s) Check operation of loading cord by turning shaft A clockwise. Be sure that the loading spring travels from the drum on shaft E to the same relative position at the drum on shaft B when shaft A hits the clockwise stop. The loading spring should not touch either drum at either end of its travel.

(t) Replace small dial cord pulley. Line up with scribe mark and tighten set screw.

(u) Rotate shaft A to its counterclockwise stop, and shaft G to its clockwise stop; then replace the gear box in the receiver. Reconnect couplers; then replace dial cords, front panel and right-hand end bracket. Replace flat washer, tension washer and collar on KILOCYCLE shaft. Push collar against tension washer until tension washer is almost flat; then tighten collar set screws. Replace knobs.

5.7. RF TUNER ASSEMBLY MAINTENANCE.

5.7.1. GENERAL. - The r-f tuner assembly will require very little maintenance. However, should it be taken apart for any reason, the following information will indicate the correct positions of the cams.

5.7.2. POSITIONS OF CAMS. - The front plate of the slug rack assembly contains three alignment holes as indicated in figure 5-5. If the cams are correctly synchronized, the tips of the front cams will be directly opposite these holes. Use a dental mirror to accurately inspect the position of the cam tips in relation to the alignment holes. If a dental mirror is not available, check positions and operation of the cams in the following manner.

(a) Turn BAND CHANGE knob to band 30. Turn KILOCYCLE knob clockwise to stop.

(b) Viewing the right-hand slug-moving cam from the front, the slug table cam rider should be approximately 1/16 inch to the right of the cam tip. The cam rider should descend this same right-hand edge when step (c) is performed.

(c) Turn BAND CHANGE knob to band 16. Turn KILOCYCLE knob counterclockwise to stop. The cam rider should still be on the same side of the cam as in step (b), and not bottomed in the low spot of the cam.

(d) Turn BAND CHANGE knob to band 15. Turn KILOCYCLE knob clockwise to stop.

(e) Viewing the center cam from the front, the cam rider should be approximately 1/32 inch to the left of the cam tip. The cam rider should descend this same left-hand edge when step (f) is performed.

(f) Turn BAND CHANGE knob to band 8. Turn KILOCYCLE knob counterclockwise to stop. The cam rider should still be on the same side of the cam as in step (e) and not bottomed in the low spot of the cam.

(g) Turn BAND CHANGE knob to band 7. Turn KILOCYCLE knob clockwise to stop.

(h) Viewing the left-hand cam from the front, the cam rider should be approximately 1/32 inch to the right of the cam tip. The cam rider should

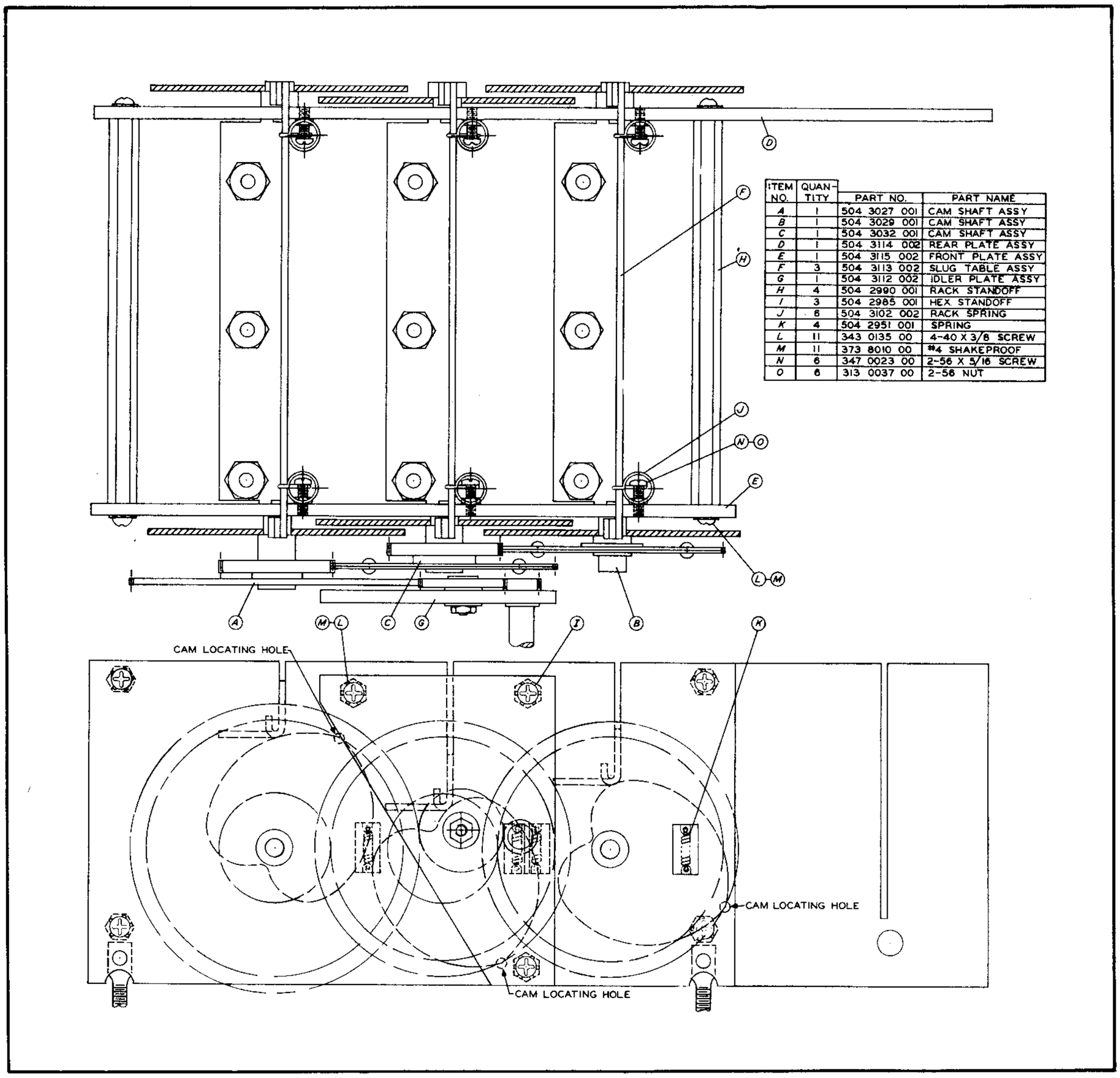

ITEM NO.	QUANTITY	PART NO.	PART NAME
A	1	504 3027 001	CAM SHAFT ASSY
B	1	504 3029 001	CAM SHAFT ASSY
C	1	504 3032 001	CAM SHAFT ASSY
D	1	504 3114 002	REAR PLATE ASSY
E	1	504 3115 002	FRONT PLATE ASSY
F	3	504 3113 002	SLUG TABLE ASSY
G	1	504 3112 002	IDLER PLATE ASSY
H	4	504 2990 001	RACK STANDOFF
I	3	504 2985 001	HEX STANDOFF
J	6	504 3102 002	RACK SPRING
K	4	504 2951 001	SPRING
L	11	343 0135 00	4-40 X 3/8 SCREW
M	11	373 8010 00	#4 SHAKEPROOF
N	6	347 0023 00	2-56 X 5/16 SCREW
O	6	313 0037 00	2-56 NUT

Figure 5-5. 51J-4 R-F Slug Rack Drawing

descend this same right-hand edge when step (i) is performed.

(i) Turn BAND CHANGE knob to band 4. Turn KILOCYCLE knob counterclockwise to stop. The cam rider should still be on the same side of the cam as in step (h) and not bottomed in the low spot of the cam.

(j) Before putting the receiver into operation again, investigate the electrical alignment of the stages affected by any repair operations, and check the synchronization of the slug rack with the BAND CHANGE mechanism.

5.8. DIAL CORDS.

5.8.1. MEGACYCLE POINTER CORD. - Refer to figure 5-6. Remove the front panel according to directions in paragraph 5.6.2.(a). If the cord is to be replaced, use 36-5/8 inches of Collins number 432 1009 00 nylon-covered cord.

(a) Turn KILOCYCLE shaft counterclockwise to stop.

(b) Tie a loop in the cord. Loop the cord over the tab at point X in figure 5-6.

(c) Wind cord about one-half turn clockwise on pulley A, continue to pulley B, pointer, pulley C, and back to pulley A.

(d) Wind cord about 1-1/2 turns clockwise around pulley A. Fasten cord to the spring on pulley A with spring at full tension.

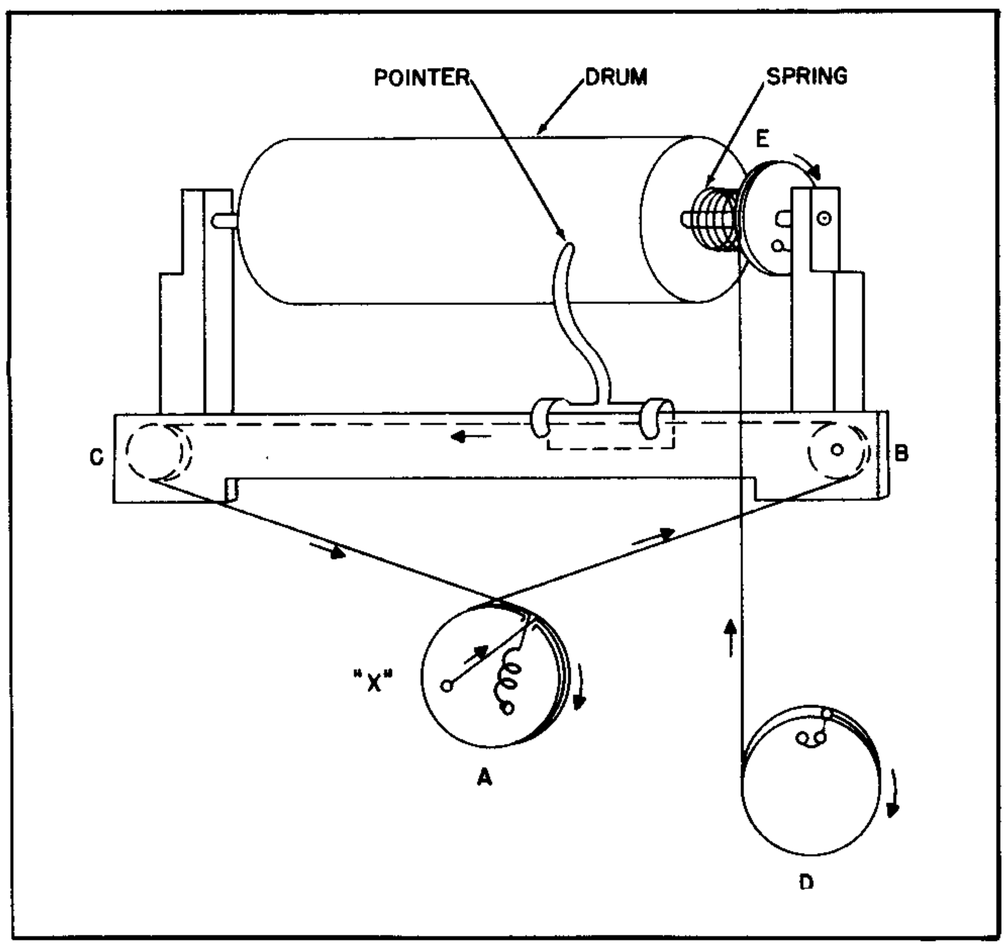

Figure 5-6. 51J-4 Dial Cord Arrangement

(e) Replace front panel, KILOCYCLE shaft flat washer, tension washer and collar, and knobs.

5.8.2. DRUM CORD. - If the drum cord has jumped the pulleys, restring it without removing the front panel. If the cord is broken, remove the front panel as in paragraph 5.6.2. Use 27 inches of Collins 432 1009 00 nylon-covered cord for replacement.

(a) Turn BAND CHANGE knob to band 30.

(b) Turn pulley E, figure 5-6, about one-half turn and hold tension of spring.

(c) Insert cord in pulley D and knot it. Wind cord about three-fourths of a turn on pulley D; extend to pulley E, and wind it 1-1/2 turns or more around pulley E as needed. Insert cord in hole and knot it.

(d) Replace panel and knobs.

(e) Turn BAND CHANGE knob to band 15.

(f) Loosen set screw in drum hub and turn drum until 15-mc band is centered in the escutcheon opening; then tighten set screw.

TABLE 5-1

51J-4 TUBE SOCKET RESISTANCE AND VOLTAGE MEASUREMENTS

All measurements taken from socket pins to ground, resistance measurements taken with no a-c input, power on, gain controls on full, AVC on, all other switches off unless otherwise noted.

Voltage measurements taken with 115 volt a-c input, power on, no input signal, r-f gain full on, audio gain off, AVC on, all other switches off unless otherwise noted. Voltages measured with vacuum tube voltmeter, 11 megohms input resistance.

TUBE	PIN	RESISTANCE	VOLTAGE	
V101	1	1.1 Meg	-1.2	
6AK5	2	Gnd	Gnd	
	3	Gnd	Gnd	
	4	Fil	AC 6.3	
	5	58K	+58	Band 1
			+190	Bands 2 - 3
			+125	Bands 4 - 30
	6	74K	+100	
	7	Gnd	Gnd	
V102	1	2	0 Small indication on	
6BE6				Bands 2 & 3
	2	470	+1.4	
	3	Gnd	Gnd	
	4	Fil	AC 6.3	
	5	43K	+180	Band 1
			Small indication	
				Bands 2 - 3
			+210	Bands 4 - 30
	6	88K	+47	
	7	330K	-1.3 to -4.5	

TUBE	PIN	RESISTANCE	VOLTAGE	
V103	1	100K	-1.3	Band 1
			-2.	Band 2
			-0	Bands 3 - 30
	2	470	+1.8	
	3	Gnd	Gnd	
	4	Fil	AC 6.3	
	5	42K	+210	Band 1
			0	Bands 2 - 30
	6	74K	+85	Band 1
			+70	Bands 2 - 30
	7	.1	0	
V104	1	680K	0	Calibrate Off
6BA6			-24	Calibrate On
	2	Inf Calibrate Off	+60	Calibrate Off
	3	4700 Calibrate On	+7.2	Calibrate On
	3	Fil	AC 6.3	
	4	Gnd	Gnd	
	5	270K	+170	Calibrate Off
			+80	Calibrate On
	6	150K	+175	Calibrate Off
			+64	Calibrate On
	7	Inf Calibrate Off	+60	Calibrate Off
		4700 Calibrate On	+7.2	Calibrate On
V105	1	100K	-10 to -30	
6AK5	2	8	+.1	
	3	Gnd	Gnd	
	4	Fil	AC 6.3	
	5	90K	+39	Bands 1 - 2
			+165	Bands 3 - 12
			+39	Bands 13 - 30
	6	76K	+105	Bands 1 - 2
			+115	Bands 3 - 12
			+105	Bands 13 - 30
	7	8	.1	
V106	1	100K	-.2	
6BE6	2	470	+2.6	
	3	Gnd	Gnd	
	4	Fil	AC 6.3	
	5	42K	+205	
	6	73K	+82	
	7	4	0	
V301	1	57K	-2.1	
6BA6	2	Gnd	Gnd	
	3	Gnd	Gnd	
	4	Fil	AC 6.3	
	5	29500	+162	
	6	23K	+52.5	
	7	Gnd	Gnd	
NOTE: 3KC filter used.				

TUBE	PIN	RESISTANCE	VOLTAGE
V302	1	Gnd	Gnd
6BA6	2	270	+2.45
	3	Gnd	Gnd
	4	Fil	AC 6.3
	5	29K	+190
	6	65K	+100
	7	270	+2.45
NOTE: 3KC filter used.			
V108	1	55000	-2.1
6BA6	2	Gnd	Gnd
	3	Gnd	Gnd
	4	Fil	AC 6.3
	5	28500	+165
	6	21500	+55
	7	Gnd	Gnd
V109	1	58K	-1.4
6BA6	2	30	+.03
	3	Gnd	Gnd
	4	Fil	AC 6.3
	5	38K	+175
	6	85K	+90
	7	30	+.03
V110	1	550	-56
12AX7	2	550	-56
	3	100K	-53
	4	Fil	AC 6.3
	5	Fil	AC 6.3
	6	100K	-2.4
	7	100K	-2.4
	8	Gnd	Gnd
	9	Gnd	Gnd
V111	1	48K	-1.4
12AU7	2	700K	-52
	3	2600	-44
	4	Fil	AC 6.3
	5	Fil	AC 6.3
	6	42K	+195
	7	100K	0
	8	1000	+6
	9	Gnd	Gnd
V112	1	33K	-.8
12AX7	2	33K	-.8
	3	33K Limiter Off	-.8 Limiter Off
		1 Meg Limiter On	-.3 Limiter On
	4	Fil	AC 3.4
	5	Fil	AC 6.3
	6	260K	+135
	7	500K	0
	8	3300	+1.2
	9	Gnd	0

TUBE	PIN	RESISTANCE	VOLTAGE
V113	1	NC	NC
6AQ5	2	Gnd	Gnd
	3	Gnd	Gnd
	4	Fil	AC 6.3
	5	40K	+220
	6	40K	+210
	7	100K	-12.5
V114	1	100K	-.5 BFO OFF
6BA6			-10 BFO On
	2	Gnd	Gnd
	3	Gnd	Gnd
	4	Fil	AC 6.3
	5	75K	200 BFO Off
		75K	140 BFO On
	6	0 BFO Off	0 BFO Off
		142K BFO On	69 BFO On
	7	.6	0
V115	1	NC	NC
5V4G	2	40K	+240
	3	NC	NC
	4	620	AC 300
	5	NC	NC
	6	620	AC 300
	7	NC	NC
	8	40K	+240
V116	1	44K	+150
OA2	2	NC	NC
	3	NC	NC
	4	Gnd	Gnd
	5	44K	+150
	6	NC	NC
	7	NC	NC

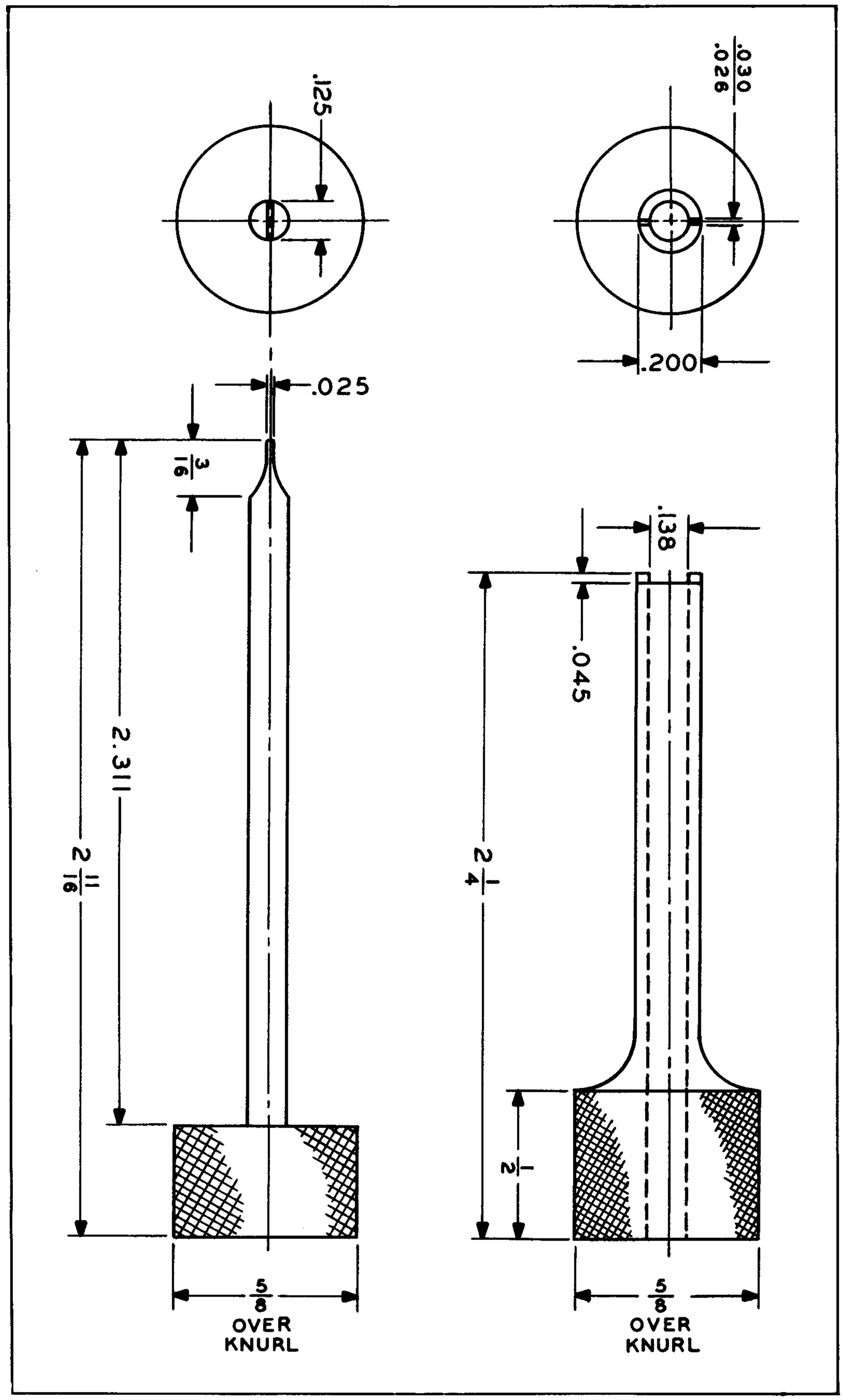

Figure 5-7. 51J-4 VFO Adjustment Tool

SECTION VI
PARTS LIST

ITEM	CIRCUIT FUNCTION	DESCRIPTION	COLLINS PART NUMBER
C-101	L-101 padding	CAPACITOR: mica, 800 mmf ±2%, 300 WV	935-5016-00
C-102	L-101 trimming	CAPACITOR: variable ceramic, 8-50 mmf, 350 WV	917-1038-00
C-103	L-102 padding	CAPACITOR: mica, 390 mmf ±2%, 300 WV	912-0535-00
C-104	L-102 trimming	CAPACITOR: variable ceramic, 8-50 mmf, 350 WV	917-1038-00
C-105	L-103 padding	CAPACITOR: mica, 220 mmf ±2%, 500 WV	912-0517-00
C-106	L-103 trimming	CAPACITOR: variable ceramic, 8-50 mmf, 350 WV	917-1038-00
C-107	L-104 padding	CAPACITOR: mica, 130 mmf ±5%, 500 WV	912-0503-00
C-108	L-104 trimming	CAPACITOR: variable ceramic, 8-50 mmf, 350 WV	917-1038-00
C-109	L-105 padding	CAPACITOR: mica, 20 mmf ±5%, 500 WV	912-0443-00
C-110	L-105 trimming	CAPACITOR: variable ceramic, 5-25 mmf, 350 WV	917-1036-00
C-111	V-101 grid coupling	CAPACITOR: ceramic, 2.0 mmf ±1/4 mmf, 500 WV	916-0075-00
C-112		CAPACITOR: Not used	
C-113	V-101 grid coupling	CAPACITOR: mica, 100 mmf ±5%, 500 WV	912-0494-00
C-114	V-101 grid decoupling	CAPACITOR: ceramic, 10,000 mmf, 500 WV	913-1188-00
C-115	V-101 screen bypass	CAPACITOR: ceramic, 10,000 mmf, 500 WV	913-1188-00
C-116	V-102 grid coupling	CAPACITOR: ceramic, 1.0 mmf ±1/4 mmf, 500 WV	916-0070-00
C-117	V-101 plate coupling	CAPACITOR: ceramic, 2.0 mmf ±1/4 mmf, 500 WV	916-0075-00
C-118	L-110 padding	CAPACITOR: mica, 910 mmf ±1%, 300 WV	935-5015-00

ITEM	CIRCUIT FUNCTION	DESCRIPTION	COLLINS PART NUMBER
C-119	L-110 trimming	CAPACITOR: variable ceramic, 8-50 mmf 350 WV	917-1038-00
C-120	L-107 trimming	CAPACITOR: variable ceramic, 8-50 mmf, 350 WV	917-1038-00
C-121	L-107 padding	CAPACITOR: mica, 200 mmf ±2%, 500 WV	912-0514-00
C-122	L-108 trimming	CAPACITOR: variable ceramic, 5-25 mmf, 350 WV	917-1036-00
C-123	L-108 padding	CAPACITOR: mica, 62 mmf ±2%, 500 WV	912-0478-00
C-124	L-109 trimming	CAPACITOR: variable ceramic, 5-25 mmf, 350 WV	917-1036-00
C-125		CAPACITOR: Not used	
C-126	V-101 plate bypass	CAPACITOR: ceramic, 10,000 mmf, 500 WV	913-1188-00
C-127	L-111 padding	CAPACITOR: mica, 200 mmf ±2%, 500 WV	912-0514-00
C-128	L-111 trimming	CAPACITOR: variable ceramic, 8-50 mmf, 350 WV	917-1038-00
C-129	L-112 padding	CAPACITOR: mica, 62 mmf ±2%, 500 WV	912-0478-00
C-130	L-112 trimming	CAPACITOR: variable ceramic, 5-25 mmf, 350 WV	917-1036-00
C-131		CAPACITOR: Not used	
C-132	L-113 trimming	CAPACITOR: variable ceramic, 5-25 mmf, 350 WV	917-1036-00
C-133	V-102 grid coupling, bands 4 and 7	CAPACITOR: ceramic, 1.5 mmf ±1/4 mmf, 500 WV	916-0072-00
C-134	V-102 cathode bypass	CAPACITOR: ceramic, 10,000 mmf, 500 WV	913-1188-00
C-135	V-102 screen bypass	CAPACITOR: ceramic, 10,000 mmf, 500 WV	913-1188-00
C-136	V-102 injection coupling	CAPACITOR: mica, 100 mmf ±5%, 500 WV	912-0494-00
C-137	L-114 to L-115 coupling	CAPACITOR: ceramic, 10,000 mmf, 500 WV	913-1188-00
C-138	V-102 plate bypass	CAPACITOR: ceramic, 10,000 mmf, 500 WV	913-1188-00
C-139	L-115 padding	CAPACITOR: ceramic, 20 mmf ±5%, 500 WV	916-4188-00
C-140	L-115 trimming	CAPACITOR: variable ceramic, 8-50 mmf, 350 WV	917-1038-00

ITEM	CIRCUIT FUNCTION	DESCRIPTION	COLLINS PART NUMBER
C-141	V-103 cathode bypass	CAPACITOR: ceramic, 10,000 mmf, 500 WV	913-1188-00
C-142	V-103 screen bypass	CAPACITOR: ceramic, 10,000 mmf, 500 WV	913-1188-00
C-143	V-103 injection coupling	CAPACITOR: mica, 100 mmf ±5%, 500 WV	912-0494-00
C-144	L-121 trimming	CAPACITOR: variable ceramic, 8-50 mmf, 350 WV	917-1038-00
C-145	L-121 padding	CAPACITOR: mica, 150 mmf ±5%, 500 WV	912-0506-00
C-146	Bands 29, 30 harmonic tuning	CAPACITOR: variable ceramic, 5-25 mmf, 350 WV	917-1036-00
C-147	Bands 27, 28 harmonic tuning	CAPACITOR: variable ceramic, 5-25 mmf, 350 WV	917-1036-00
C-148	Bands 25, 26 harmonic tuning	CAPACITOR: variable ceramic, 5-25 mmf, 350 WV	917-1036-00
C-149	Bands 23, 24 harmonic tuning	CAPACITOR: variable ceramic, 5-25 mmf, 350 WV	917-1036-00
C-150	Bands 21, 22 harmonic tuning	CAPACITOR: variable ceramic, 8-50 mmf, 350 WV	917-1038-00
C-151	Bands 23, 24 harmonic tuning	CAPACITOR: ceramic, 15 mmf ±5%, 500 WV	916-4180-00
C-152	Bands 12, 20 harmonic tuning	CAPACITOR: variable ceramic, 8-50 mmf, 350 WV	917-1038-00
C-153	Bands 17, 18 harmonic tuning	CAPACITOR: ceramic, 36 mmf ±5%, 500 WV	916-4347-00
C-154	Bands 17, 18 harmonic tuning	CAPACITOR: variable ceramic, 8-50 mmf, 350 WV	917-1038-00
C-155	Bands 15, 16 harmonic tuning	CAPACITOR: ceramic, 47 mmf ±5%, 500 WV	916-4362-00
C-156	Bands 15, 16 harmonic tuning	CAPACITOR: variable ceramic, 8-50 mmf, 350 WV	917-1038-00
C-157	Bands 13, 14 harmonic tuning	CAPACITOR: ceramic, 68 mmf ±5%, 500 WV	916-4972-00
C-158	Bands 13, 14 harmonic tuning	CAPACITOR: variable ceramic, 8-50 mmf, 350 WV	917-1038-00
C-159	Spurious filter tuning	CAPACITOR: mica, 150 mmf ±5%, 500 WV	912-0506-00
C-160		CAPACITOR: Not used	

ITEM	CIRCUIT FUNCTION	DESCRIPTION	COLLINS PART NUMBER
C-161	Band 1 harmonic tuning	CAPACITOR: mica, 200 mmf ±2%, 500 WV	912-0514-00
C-162	Band 1 harmonic tuning	CAPACITOR: variable ceramic, 8-50 mmf, 350 WV	917-1038-00
C-163	V-105 plate bypass	CAPACITOR: ceramic, 10,000 mmf, 500 WV	913-1188-00
C-164	V-105 screen bypass	CAPACITOR: ceramic, 10,000 mmf, 500 WV	913-1188-00
C-165	Osc. feedback network	CAPACITOR: ceramic, 15 mmf ±5%, 500 WV	916-4180-00
C-166	Osc. feedback network	CAPACITOR: mica, 100 mmf ±5%, 500 WV	912-0494-00
C-167	Osc. grid circuit trimmer	CAPACITOR: variable ceramic, 3-12 mmf, 350 WV	917-1035-00
C-168	Second Mixer grid trap	CAPACITOR: mica, 220 mmf ±2%, 500 WV	912-0517-00
C-169	Freq. standard adjusting	CAPACITOR: variable ceramic, 5-25 mmf, 350 WV	917-1036-00
C-170	V-104 cathode bypass	CAPACITOR: ceramic, 10,000 mmf, 500 WV	913-1188-00
C-171	V-104 screen bypass	CAPACITOR: mica, 100 mmf ±5%, 500 WV	912-0494-00
C-172	V-104 plate decoupling	CAPACITOR: ceramic, 10,000 mmf, 500 WV	913-1188-00
C-173	Freq. standard coupling	CAPACITOR: ceramic, 10 mmf ±1 mmf, 500 WV	916-0139-00
C-174	L-116 trimming	CAPACITOR: variable ceramic, 8-50 mmf, 350 WV	917-1038-00
C-175	L-116 padding	CAPACITOR: mica, 180 mmf ±2%, 500 WV	912-0511-00
C-176	L-117 trimming	CAPACITOR: variable ceramic, 8-50 mmf, 350 WV	917-1038-00
C-177	L-117 padding	CAPACITOR: mica, 300 mmf ±2%, 500 WV	912-0526-00
C-178	V-103 plate bypass	CAPACITOR: ceramic, 10,000 mmf 500 WV	913-1188-00
C-179	L-118 padding	CAPACITOR: mica, 180 mmf ±2%, 500 WV	912-0511-00
C-180	L-118 trimming	CAPACITOR: variable ceramic, 8-50 mmf, 350 WV	917-1038-00
C-181	L-119 padding	CAPACITOR: mica, 300 mmf ±2%, 500 WV	912-0526-00
C-182	L-119 trimming	CAPACITOR: variable ceramic, 8-50 mmf, 350 WV	917-1038-00
C-183	V-106 cathode bypass	CAPACITOR: ceramic, 10,000 mmf, 500 WV	913-1188-00

ITEM	CIRCUIT FUNCTION	DESCRIPTION	COLLINS PART NUMBER
C-184	V-106 grid bypass	CAPACITOR: mica, 100 mmf ±5%, 500 WV	912-0494-00
C-185	V-106 screen bypass	CAPACITOR: ceramic, 10,000 mmf, 500 WV	913-1188-00
C-186	V-106 plate bypass	CAPACITOR: ceramic, 10,000 mmf, 500 WV	913-1188-00
C-187	Filter crystal parallel	CAPACITOR: ceramic, 10 mmf ±1 mmf, 500 WV	916-0139-00
C-188	Filter crystal phasing	CAPACITOR: variable air, midget, single section, 3.5-27 mmf	922-0079-00
C-189	V-301 grid decoupling	CAPACITOR: ceramic, 10,000 mmf, 500 WV	913-1188-00
C-192		Not used	
C-194	V-108 screen bypass	CAPACITOR: ceramic, 10,000 mmf, 500 WV	913-1188-00
C-195	V-108 plate bypass	CAPACITOR: ceramic, 10,000 mmf, 500 WV	913-1188-00
C-196	T-104 top coupling	CAPACITOR: ceramic, 3.0 mmf ±1/4 mmf, 500 WV	916-0144-00
C-197	V-109 grid decoupling	CAPACITOR: ceramic, 10,000 mmf, 500 WV	913-1188-00
C-198	A. V-109 cathode bypass B. 6.3 ac filament bypass	CAPACITOR: paper, 0.1 -0.1 mf ±20%, -10%, 600 WV	961-5169-00
C-199	V-109 screen bypass	CAPACITOR: ceramic, 10,000 mmf, 500 WV	913-1188-00
C-200	V-109 plate bypass	CAPACITOR: ceramic, 10,000 mmf, 500 WV	913-1188-00
C-201	T-105 top coupling	CAPACITOR: ceramic, 5.0 mmf ±1/4 mmf, 500 WV	916-0118-00
C-202	Detector filter	CAPACITOR: mica, 330 mmf ±2%, 500 WV	912-0529-00
C-203		CAPACITOR: Not used	
C-204	AVC rectifier coupling	CAPACITOR: mica, 100 mmf ±5%, 500 WV	912-0494-00
C-205	A. Back bias r-f filter B. AVC amplr. stabilizing C. Noise limiter filter	CAPACITOR: paper, 0.1-0.1-0.1 mf ±20%-10%, 600 WV	961-5187-00
C-206*		CAPACITOR: mica, 1.5 mmf ±1/2 mmf 500 WV	916-0072-00
C-206*	BFO coupling	CAPACITOR: mica, 2 mmf ±1/2 mmf, 500 WV	916-0075-00
C-207	Line filter	CAPACITOR: ceramic, 10,000 mmf, 500 WV	913-1188-00
C-208	AVC amplr. stabilizing	CAPACITOR: ceramic, 10,000 mmf, 500 WV	913-1188-00

* Value of C206 selected in test to provide optimum BFO coupling while maintaining BFO injection below AVC threshold. Unused capacitor to be soldered into radio across two ground terminals.

ITEM	CIRCUIT FUNCTION	DESCRIPTION	COLLINS PART NUMBER
C-209	Audio coupling	CAPACITOR: ceramic, 10,000 mmf, 500 WV	913-1188-00
C-210		CAPACITOR: Not used	
C-211	Audio coupling	CAPACITOR: ceramic, 10,000 mmf, 500 WV	913-1188-00
C-212	Audio output equalizer	CAPACITOR: mica 6,800 mmf ±10%, 300 WV	935-2110-00
C-213	AVC time constant	CAPACITOR: ceramic, 10,000 mmf, 500 WV	913-1188-00
C-214	K-101 noise filter	CAPACITOR: paper, 0.1-0.1 mf +20%-10%, 600 WV	961-4175-00
C-215	V-111 cathode bypass	CAPACITOR: dry electrolytic, 20 mf 150 WV	184-6509-00
C-216	Back bias filter	CAPACITOR: dry electrolytic, 20 mf 150 WV	184-6509-00
C-217	Power supply filter	CAPACITOR: dry electrolytic, dual section; 40 mf each section -15%+100% 450 WV	183-1009-00
C-218	V-114 screen bypass	CAPACITOR: ceramic, 10,000 mmf, 500 WV	913-1188-00
C-219	V-114 screen decoupling	CAPACITOR: ceramic, 10,000 mmf, 500 WV	913-1188-00
C-220	L-116, L-118 top coupling	CAPACITOR: ceramic, 4.0 mmf ±1/4 mmf, 500 WV	916-0113-00
C-221	L-117, L-119 top coupling	CAPACITOR: ceramic, 2.0 mmf ±1/4 mmf, 500 WV	916-0075-00
C-222		CAPACITOR: Not used	
C-223	B+ isolation capacitor	CAPACITOR: dry electrolytic, 8 mf, 350 WV	184-6515-00
C-224	Cal. osc. adjustment	CAPACITOR: variable air, 7-100 mmf	922-0153-00
C-225		CAPACITOR: Not used	
C-226	V-111B grid coupling	CAPACITOR: mica, 100 mmf ±5%, 500 WV	912-0494-00
C-227	V-111B plate bypass	CAPACITOR: ceramic, 10,000 mmf, 500 WV	913-1188-00
C-228	IF output coupling	CAPACITOR: ceramic, 10,000 mmf, 500 WV	913-1188-00
C-229		CAPACITOR: Not used	
C-230	Antenna trimmer, all bands	CAPACITOR: variable air, 7-100 mmf	922-0153-00
C-231	Antenna fixed timmer, bands 8-15	CAPACITOR: ceramic, 100 mmf ±5%, 500 WV	916-4059-00
C-232	Antenna fixed trimmer, bands 16-30	CAPACITOR: ceramic, 18 mmf ±5%, 500 WV	916-0674-00

ITEM	CIRCUIT FUNCTION	DESCRIPTION	COLLINS PART NUMBER
C-233	Antenna coupling, band 1	CAPACITOR: ceramic, 100 mmf +5%, 500 WV	916-4059-00
C-234	Antenna coupling, band 2	CAPACITOR: ceramic, 51 mmf ±5%, 500 WV	916-0476-00
C-235	Antenna coupling, band 3	CAPACITOR: ceramic, 36 mmf ±5%, 500 WV	916-4347-00
C-236	Antenna coupling, bands 4-7	CAPACITOR: ceramic, 22 mmf ±5%, 500 WV	916-4323-00
C-237	Antenna coupling, bands 8-15	CAPACITOR: ceramic, 10 mmf ±1 mmf, 500 WV	916-0139-00
C-238	Antenna coupling, bands 16-30	CAPACITOR: ceramic, 5 mmf ±1/2 mmf, 500 WV	916-0118-00
C-239	Oscillator plate filter	CAPACITOR: 8 mf, 350 WV	184-6515-00
C-240	V108 Cathode	CAPACITOR: fixed ceramic; 10,000 mmf; 500 WV	913-1188-00
C-301	Mech. filter input tuning	CAPACITOR: mica, 200 mmf ±2%; 500 WV	912-0514-00
C-302	Mech. filter output tuning	CAPACITOR: mica, 200 mmf ±2%; 500 WV	912-0514-00
C-303	V-301 cathode bypass	CAPACITOR: ceramic, 10,000 mmf; 500 WV	913-1188-00
C-304	V-301 screen bypass	CAPACITOR: ceramic, 10,000 mmf; 500 WV	913-1188-00
C-305	V-301 plate bypass	CAPACITOR: ceramic, 10,000 mmf; 500 WV	913-1188-00
C-306	L-301 tuning	CAPACITOR: mica, 270 mmf ±5%; 500 WV	912-0524-00
C-307	V-108 grid coupling	CAPACITOR: mica, 100 mmf ±2%; 500 WV	912-0493-00
C-308	V-301 screen bypass	CAPACITOR: ceramic, 10,000 mmf, 500 WV	913-1188-00
C-309	V-301 plate bypass	CAPACITOR: ceramic, 10,000 mmf, 500 WV	913-1188-00
C-310	V-108 grid decoupling	CAPACITOR: ceramic, 10,000 mmf, 500 WV	913-1188-00
C-311	Filter tuning	CAPACITOR: mica, 5 mmf ±5%; 500 WV	912-0429-00
C-312	Filter tuning	CAPACITOR: ceramic, 8 mmf ±5%; 500 WV	916-0129-00
C-313	Filter tuning	CAPACITOR: mica, 12 mmf ±5%; 500 WV	912-0434-00
C-314	Filter tuning	CAPACITOR: mica, 12 mmf ±5%; 500 WV	912-0434-00
C-315	Filter tuning	CAPACITOR: mica, 15 mmf ±5%; 500 WV	912-0437-00
C-316	Filter tuning	CAPACITOR: mica, 18 mmf ±5%; 500 WV	912-0440-00
CR-101	M-101 rectifier	RECTIFIER: dry disk, instrument type	353-3000-00
E-101	K-101 term. bd.	BOARD, terminal	306-0158-00
E-102	Audio output term. bd.	BOARD, terminal	306-0158-00
F-101	Primary power fuse	FUSE: cartridge, 1.5 amp, one time	264-0007-00
I-101	Dial light	LAMP: pilot light, miniature bayonet base bulb, T-3-1/4 bulb	262-3240-00

ITEM	CIRCUIT FUNCTION	DESCRIPTION	COLLINS PART NUMBER
I-102	Dial light	LAMP: pilot light, miniature bayonet base bulb, T-3-1/4 bulb	262-3240-00
I-103	Dial light	LAMP: pilot light, miniature bayonet base bulb, T-3-1/4 bulb	262-3240-00
I-104	Static discharge	LAMP: glow, bayonet candelabra base, T-4-1/2 bulb	262-0238-00
I-105	Band drum	DIAL: band indicating drum	504-3097-00
J-101	Antenna input	CONNECTOR: receptacle, single round female contact	357-9005-00
J-102	Speaker output	JACK: telephone, 3 circuit, for use with .206" diam plug	358-1050-00
J-103	Phone output	JACK: telephone, 2 circuit, for use with .250" diam plug	358-1040-00
J-104	I-F output	CONNECTOR: receptacle, single round female contact	357-9005-00
K-101	Break-in relay	RELAY: armature, contacts 2-1C, 150 ma, 210 v dc; coil nominal 12 v dc, 135 ohms	972-1176-00
L-101	Antenna coil, band 1	COIL ASSEMBLY: R-F, single winding, 75 turns, single layer wound	504-3056-001
L-102	Antenna coil, band 2	COIL: R-F, single layer wound, 48 turns #28 enameled wire	505-2147-002
L-103	Antenna coil, band 3	COIL: RF, single layer wound, 43 turns #28 enameled wire	505-2148-002
L-104	Antenna coil, bands 4-7	COIL ASSEMBLY: RF, single winding, 27 turns single layer wound	504-3060-001
L-105	Antenna coil, bands 8-15	COIL ASSEMBLY: RF, single winding, 20 turns, single layer wound	504-3061-001
L-106	Antenna Coil, bands 16-30	COIL ASSEMBLY: RF, single winding, 20 turns, single layer wound	504-3062-001
L-107	Mixer coil pri., bands 4-7	COIL ASSEMBLY: RF, single winding, 27 turns, single layer wound	504-3060-001
L-108	Mixer coil pri., bands 8-15	COIL ASSEMBLY: RF, single winding, 20 turns, single layer wound	504-3061-001
L-109	Mixer coil pri., bands 16-30	COIL ASSEMBLY: RF, single winding, 20 turns, single layer wound	504-3062-001
L-110	Mixer coil, band 1	COIL ASSEMBLY: RF, single winding, 75 turns, single layer wound	504-3056-001
L-111	Mixer coil sec, bands 4-7	COIL ASSEMBLY: RF, single winding, 27 turns, single layer wound	504-3060-001

ITEM	CIRCUIT FUNCTION	DESCRIPTION	COLLINS PART NUMBER
L-112	Mixer coil sec, bands 8-15	COIL ASSEMBLY: RF, single winding, 20 turns, single layer wound	504-3061-001
L-113	Mixer coil sec, bands 16-30	COIL ASSEMBLY: RF, single winding, 20 turns, single layer wound	504-3062-001
L-114	11.5-10.5 mc i-f coil, band 1	COIL: IF, transformer, single winding, 48 turns, single layer wound	504-3064-001
L-115	11.5-10.5 mc i-f coil, band 1	COIL: IF, transformer, single winding, 16 turns, single layer wound	504-3057-001
L-116	Variable i-f coil pri.	COIL: IF, transformer, single winding, 48 turns, single layer wound	504-3064-001
L-117	Variable i-f coil pri.	COIL: IF, transformer, single winding, 46 turns, universal wound	504-3066-001
L-118	Variable i-f coil sec.	COIL: IF, transformer, single winding, 48 turns, single layer wound	504-5347-001
L-119	Variable i-f coil sec.	COIL: IF, transformer, single winding, 46 turns, universal wound	504-3066-001
L-120	Inj. osc. cathode coil	COIL: RF, 3 windings, 112 turns, universal wound	503-4535-001
L-121	Inj. osc. harmonic selector	COIL: RF, single winding, 46 turns, single layer wound	504-3074-002
L-122	Power filter	REACTOR: filter choke, 3.0 hy 120 ma, 100 ohm 250 TV RMS	678-0432-00
L-123	Power filter	REACTOR: filter choke, 5 hy 80 ma, 300 ohm, 2500 TV RMS	678-0431-00
L-124	Spurious filter	FILTER: band supression, rejection frequency 4 megacycles, .260" diam hole for mounting	504-6646-002
L-125	Spurious filter	COIL: RF, choke, 0.5 millihenry ±10%, #36 wire	240-0073-00
M-101	Single level & db meter	METER: audio level, 0-1 ma 46 ohms ±10%	476-0252-00
R-101	V-101 grid return	RESISTOR: 1 megohm ±10%, 1/2 w	745-1478-00
R-102	V-101 grid decoupling	RESISTOR: .10 megohm ±10%, 1/2 w	745-1436-00
R-103		RESISTOR: Not used	
R-104	V-101 screen dropping	RESISTOR: 33,000 ohm ±10%, 1/2 w	745-1415-00

ITEM	CIRCUIT FUNCTION	DESCRIPTION	COLLINS PART NUMBER
R-105	V-101 plate load, band 1	RESISTOR: 10,000 ohm ±10%, 1 w	745-3394-00
R-106	V-101 plate decoupling	RESISTOR: 6800 ohm ±10%, 1/2 w	745-1386-00
R-107	V-102 cathode	RESISTOR: 470 ohm ±10%, 1/2 w	745-1338-00
R-108	V-102 grid 1 return	RESISTOR: .33 megohm ±10%, 1/2 w	745-1457-00
R-109	V-102 screen dropping	RESISTOR: 47,000 ohm ±10%, 1 w	745-3422-00
R-110	V-102 plate decoupling	RESISTOR: 2200 ohm ±10%, 1/2 w	745-1366-00
R-111	V-103 cathode	RESISTOR: 470 ohm ±10%, 1/2 w	745-1338-00
R-112	V-103 grid 1 return	RESISTOR: .10 megohm ±10%, 1/2 w	745-1436-00
R-113	V-103 screen dropping	RESISTOR: 33,000 ohm ±10%, 1 w	745-3415-00
R-114	V-105 screen dropping	RESISTOR: 33,000 ohm ±10%, 1/2 w	745-1415-00
R-115	V-105 grid leak	RESISTOR: 10 megohm ±10%, 1/2 w	745-1436-00
R-116	V-103 plate load	RESISTOR: 2200 ohm ±10%, 1/2 w	745-1366-00
R-117	V-103 plate load	RESISTOR: 47,000 ohm ±10%, 1/2 w	745-1422-00
R-118	V-104 grid leak	RESISTOR: .68 megohm ±10%, 1/2 w	745-1471-00
R-119	V-104 cathode	RESISTOR: 4700 ohm ±10%, 1/2 w	745-1380-00
R-120	V-104 screen dropping	RESISTOR: 47,000 ohm ±10%, 1/2 w	745-1422-00
R-121	V-104 plate dropping	RESISTOR: .12 megohm ±10%, 1/2 w	745-1440-00
R-122	V-104 plate, screen decoupling	RESISTOR: 10,000 ohm ±10%, 1/2 w	745-1394-00
R-123	V-106 grid leak bias	RESISTOR: .10 megohm ±10%, 1/2 w	745-1436-00
R-124	V-103 plate decoupling	RESISTOR: 2200 ohm ±10%, 1/2 w	745-1366-00
R-125	V-107 grid load	RESISTOR: .47 megohm ±10%, 1/2 w	745-1464-00
R-126	V-107 screen dropping	RESISTOR: 27,000 ohm ±10%, 1/2 w	745-1412-00
R-127	V-106 cathode	RESISTOR: 470 ohm ±10%, 1/2 w	745-1338-00
R-128	V-106 screen dropping	RESISTOR: 33,000 ohm ±10%, 1 w	745-3415-00
R-129	V-106 plate decoupling	RESISTOR: 2200 ohm ±10%, 1/2 w	745-1366-00
R-130	Crystal filter selectivity	RESISTOR: .10 megohm ±10%, 1/2 w	745-1436-00

ITEM	CIRCUIT FUNCTION	DESCRIPTION	COLLINS PART NUMBER
R-131	Crystal filter selectivity	RESISTOR: 22,000 ohm ±10%, 1/2 w	745-1408-00
R-132	Crystal filter selectivity	RESISTOR: 4700 ohm ±10%, 1/2 w	745-1380-00
R-133	V-301 grid decoupling	RESISTOR: 10,000 ohm ±10%, 1/2 w	745-1394-00
R-137	V-108 screen dropping	RESISTOR: 47,000 ohm ±10%, 1/2 w	745-1422-00
R-138	V-108 plate decoupling	RESISTOR: 2200 ohm ±10%, 1/2 w	745-1366-00
R-139	V-109 grid decoupling	RESISTOR: 10,000 ohm ±10%, 1/2 w	745-1394-00
R-140	"S" meter zero adjust	RESISTOR: 100 ohm ±20%, 1/2 w	376-3751-00
R-141	V-109 screen dropping	RESISTOR: 47,000 ohm ±10%, 1/2 w	745-1422-00
R-142	V-109 plate decoupling	RESISTOR: 2200 ohm ±10%, 1 w	745-3366-00
R-143	V-112 filament series	RESISTOR: 10 ohm ±10%, 1/2 w	745-1268-00
R-144	AVC amplr stabilizing	RESISTOR: .47 megohm ±10%, 1/2 w	745-1464-00
R-145	AVC rectifier load	RESISTOR: .10 megohm ±10%, 1/2 w	745-1436-00
R-146	AVC amplr load	RESISTOR: 47,000 ohm ±10%, 1/2 w	745-1422-00
R-147	AVC amplr plate dropping	RESISTOR: 27,000 ohm ±5%, 1/2 w	745-1412-00
R-148	RF gain control	RESISTOR: 10,000 ohm ±20%, 1/2 w	376-3522-00
R-149	RF gain control, fixed	RESISTOR: 680 ohm ±5%, 1/2 w	745-1344-00
R-150	Detector load	RESISTOR: 68,000 ohm ±10%, 1/2 w	745-1429-00
R-151	Detector load	RESISTOR: 33,000 ohm ±10%, 1/2 w	745-1415-00
R-152	Limiter filter	RESISTOR: .47 megohm ±10%, 1/2 w	745-1464-00
R-153	Limiter filter	RESISTOR: .47 megohm ±10%, 1/2 w	745-1464-00
R-154	Audio gain control	RESISTOR: 500,000 ohm ±20%, 1/2 w	376-3027-00
R-155	V-112B cathode	RESISTOR: 3300 ohm ±10%, 1/2 w	745-1373-00
R-156	V-112B plate load	RESISTOR: .22 megohm ±10%, 1/2 w	745-1450-00
R-157	V-113 grid load	RESISTOR: .10 megohm ±10%, 1/2 w	745-1436-00
R-158		Not Used	
R-159		Not Used	

ITEM	CIRCUIT FUNCTION	DESCRIPTION	COLLINS PART NUMBER
R-160	V-114 screen dropping	RESISTOR: 10 megohm ±10%, 1 w	745-3436-00
R-161	V-114 plate load	RESISTOR: 33,000 ohm ±10%, 1/2 w	745-1415-00
R-162	V-114 plate dropping	RESISTOR: 2200 ohm ±10%, 1/2 w	745-1366-00
R-163	"S" meter series	RESISTOR: 100 ohm ±10%, 1/2 w	745-1310-00
R-164	Back bias dropping	RESISTOR: wire-wound, 120 ohm ±5%, 8 w	747-0073-00
R-165	Back bias dropping	RESISTOR: wire-wound, 310 ohm ±5%, 8 w	747-0077-00
R-166	Back bias dropping	RESISTOR: wire wound, 120 ohm ±5%, 8 w	747-0073-00
R-167	AVC amplr stabilizing	RESISTOR: .10 megohm ±10%, 1/2 w	745-1436-00
R-168	V-111A cathode	RESISTOR: 2200 ohm ±10%, 1/2 w	745-1436-00
R-169	V-108 screen dropping	RESISTOR: 27,000 ohm ±10%, 1/2 w	745-1412-00
R-171	AVC amplr stabilizing	RESISTOR: 120,000 ohm ±10%, 1/2 w	745-1440-00
R-172	Static drain	RESISTOR: .47 megohm ±10%, 1/2 w	745-1464-00
R-173	Audio voltage dropping	RESISTOR: 1800 ohm ±5%, 2 w	745-5662-00
R-174	B+ isolation	RESISTOR: 1000 ohm ±10%, 2 w	745-5652-00
R-175		RESISTOR: Not used	
R-176		RESISTOR: Not used	
R-177	V-111B grid	RESISTOR: .22 megohm ±10%, 1/2 w	745-1170-00
R-178	V-111B grid	RESISTOR: .10 megohm ±10%, 1/2 w	745-1184-00
R-179	V-111B cathode	RESISTOR: 1000 ohm ±10%, 1/2 w	745-1352-00
R-180	V-111B plate dropping	RESISTOR: 2200 ohm ±10%, 1/2 w	745-1366-00
R-181	V-116 plate load	RESISTOR: 1400 ohm ±5%, 12 w	747-1182-00
R-182	M-101 rectifier load	RESISTOR: 220 ohm ±10%, 1/2 w	745-1324-00
R-183	T-105 pri load	RESISTOR: comp, 68,000 ohm p/m ±10%, 1/2 w	745-1429-00
R-184	Back bias dropping	RESISTOR: comp, 12 ohm p/m ±10%, 2 w	745-5572-00
R-185	Oscillator plate filter	RESISTOR: 1800 ohm, ±5%, 12 w	747-1183-00
R-186	V113 grid	RESISTOR: fixed composition; 0.22 megohm ±10%, 1/2 w	745-1450-00
R-187	I-f gain	RESISTOR: variable composition; 10,000 ohms ±20%, 1/2 w	376-2427-00
R-301	V-301 screen dropping	RESISTOR: 39,000 ohm ±10%, 1 w	745-3419-00
R-302	V-301 plate load	RESISTOR: 12,000 ohm ±10%, 1/2 w	745-1440-00

ITEM	CIRCUIT FUNCTION	DESCRIPTION	COLLINS PART NUMBER
R-303	V-301 plate decoupling	RESISTOR: 1,000 ohm ±10%, 1/2 w	745-1352-00
R-304	V-301 grid	RESISTOR: 470,000 ohm ±10%, 1/2 w	745-1464-00
R-305	V-301 cathode	RESISTOR: 270 ohm ±10%, 1/2 w	745-1328-00
R-306		Not used	
R-307	V-301 screen dropping	RESISTOR: 47,000 ohm ±10%, 1/2 w	745-1422-00
R-308	"S" meter bridge	RESISTOR: 100 ohm ±10%, 1/2 w	745-1310-00
R-309	V-301 plate decoupling	RESISTOR: 2200 ohm ±10%, 1/2 w	745-1366-00
R-310	V-108 grid decoupling	RESISTOR: 10,000 ohm ±10%, 1/2 w	745-1394-00
S-101	Antenna coil selector	SWITCH: rotary, 1 circuit, 17 position	269-1271-00
S-102	Antenna trimmer selector	SWITCH: rotary, 1 circuit, 17 position	269-1271-00
S-103	RF coil selector	SWITCH: rotary, 1 circuit, 18 position	269-1273-00
S-104	RF amplr plate coil selector	SWITCH: rotary, 1 circuit, 18 position	269-1273-00
S-105	Mixer grid coil selector	SWITCH: rotary, 1 circuit, 18 position	269-1273-00
S-106	Mixer plate circuit selector	SWITCH: rotary, 1 circuit, 17 position	269-1271-00
S-107	Mixer plate circuit selector	SWITCH: rotary, 1 circuit, 17 position	269-1271-00
S-108	Inj osc harmonic selector	SWITCH: rotary, 2 circuit, 15 position	269-1272-00
S-109	Crystal selector	SWITCH: rotary, 1 circuit, 17 position	269-1271-00
S-110	Variable i-f selector	SWITCH: rotary, 1 circuit, 2 position	269-1270-00
S-111	Variable i-f selector	SWITCH: rotary, 1 circuit, 2 position	269-1270-00
S-112	BFO ON-OFF	SWITCH: rotary, 2 circuit, 2 position	259-0380-00
S-113	ON-STANDBY-OFF	SWITCH: band change, 2 circuit, 3 position, shorting	259-0381-00
S-114	SELECTIVITY	SWITCH: band change, 1 circuit, shorting, 5 position	259-0379-00
S-115	AVC ON-OFF	SWITCH: rotary, 2 circuit, 2 position	259-0380-00

ITEM	CIRCUIT FUNCTION	DESCRIPTION	COLLINS PART NUMBER
S-116	LIMITER IN-OUT	SWITCH: rotary, 2 circuit, 2 position	259-0380-00
S-117	METER INPUT-OUTPUT	SWITCH: toggle, DPDT, 30 ampere continuous	266-3062-00
S-118	CALIBRATE ON-OFF	SWITCH: rotary, 2 circuit, 2 position	259-0380-00
T-101	Crystal filter input	TRANSFORMER: IF, frequency range 490 to 510 kc	278-0093-00
T-102	Crystal filter output	FILTER: bandpass, frequency range 490 to 510 kc	278-0092-00
T-103		Not used	
T-104	Second i-f	TRANSFORMER: IF, frequency 490 to 510 kc	278-0090-00
T-105	Third i-f	TRANSFORMER: IF, frequency 490 to 510 kc	278-0090-00
T-106	BFO coil	OSCILLATOR SUBASSEMBLY: frequency range 480 to 520 kc	278-0091-00
T-107	Audio output	TRANSFORMER: AF, line type, pri 5000 ohm, secd 600 ohm tapped at 4 ohms, 1500 TV, 3w max	677-0430-00
T-108	Power input	TRANSFORMER: power pri 115 v, secd #1, 700 v, secd #2, 5.0 v, secd #3, 6.3 v, 45/70 cps	672-0575-00
V-001	Oscillator	TUBE: type 6BA6, pentode JAN COMMERCIAL	254-0787-00 255-0185-00
V-002	Buffer	TUBE: type 6BA6, pentode JAN COMMERCIAL	254-0787-00 255-0185-00
V-101	RF amplr	TUBE: type 6AK5, pentode JAN COMMERCIAL	254-0121-00 257-0040-00
V-102	First Mixer	TUBE: type 6BE6, pentagrid JAN COMMERCIAL	254-0799-00 257-0048-00
V-103	Band 1 mixer	TUBE: type 6BE6, pentagrid JAN COMMERCIAL	254-0799-00 257-0048-00
V-104	Cal. osc.	TUBE: type 6BA6, pentode JAN COMMERCIAL	254-0787-00 255-0185-00
V-105	Inj. osc.	TUBE: type 6AK5, pentode JAN COMMERCIAL	254-0121-00 257-0040-00
V-106	Second mixer	TUBE: type 6BE6, pentagrid JAN COMMERCIAL	254-0799-00 257-0048-00
V-301	First i-f amplr.	TUBE: type 6BA6, pentode JAN COMMERCIAL	254-0787-00 255-0185-00
V-302	Second i-f amplr.	TUBE: type 6BA6, pentode JAN COMMERCIAL	254-0787-00 255-0185-00
V-108	Third i-f amplr.	TUBE: type 6BA6, pentode JAN COMMERCIAL	254-0787-00 255-0185-00

ITEM	CIRCUIT FUNCTION	DESCRIPTION	COLLINS PART NUMBER
V-109	Fourth i-f amplr.	TUBE: type 6BA6, pentode JAN COMMERCIAL	254-0787-00 255-0185-00
V-110	Detector & AVC rectifier	TUBE: type 12AX7, twin triode JAN COMMERCIAL	254-0790-00 255-0201-00
V-111	AVC amplr. & IF output	TUBE: type 12AU7, twin triode JAN COMMERCIAL	254-0792-00 255-0199-00
V-112	Limiter & first audio amplr.	TUBE: type 12AX7, twin triode JAN COMMERCIAL	254-0790-00 255-0201-00
V-113	Second audio amplr.	TUBE: type 6AQ5, pentode JAN COMMERCIAL	254-0788-00 255-0195-00
V-114	BFO	TUBE: type 6BA6, pentode JAN COMMERCIAL	254-0787-00 255-0185-00
V-115	Power rectifier	TUBE: type 5V4G, rectifier JAN COMMERCIAL	254-0102-00 255-0081-00
V-116	Voltage regulator	TUBE: type OA2, voltage regulator JAN COMMERCIAL	254-0793-00 257-0052-00
XF-101	Holder for F-101	HOLDER: fuse, extractor post for single 3AG fuse	265-1003-00
XI-101	Socket for I-101	SOCKET: lamp, pilot light bracket, miniature bayonet base.	262-0240-00
XI-102	Socket for I-102	SOCKET: lamp, pilot light bracket, miniature bayonet base	262-0240-00
XI-103	Socket for I-103	SOCKET: lamp, pilot light assembly, bayonet base	262-0239-00
XV-101 thru XV-106	Sockets for V-101, V-102, V-103, V-104, V-105, V-106	SOCKET: tube, 7 contact miniature, shielded	220-1111-00
XV-108 and XV-109	Sockets for V-108 and V-109	SOCKET tube, 7 contact miniature, shielded	220-1111-00
XV-301	Socket for V-301	SOCKET: tube, 7 contact miniature, shielded	220-1111-00
XV-302	Socket for V-302	SOCKET: tube, 7 contact miniature, shielded	220-1046-00
XV-110	Socket for V-110	SOCKET: tube, 9 contact miniature, shielded	220-1103-00
XV-111	Socket for V-111	SOCKET: tube, 9 contact miniature, shielded	220-1103-00
XV-112	Socket for V-112	SOCKET: tube, 9 contact miniature, shielded	220-1103-00
XV-113	Socket for V-113	SOCKET: tube, 7 contact miniature, shielded	220-1111-00

ITEM	CIRCUIT FUNCTION	DESCRIPTION	COLLINS PART NUMBER
XV-114	Socket for V-114	SOCKET: tube, 7 contact miniature, shielded	220-1111-00
XV-115	Socket for V-115	SOCKET: tube, octal	220-1121-00
XV-116	Socket for V-116	SOCKET: tube, 7 contact miniature, shielded	220-1111-00
XY-101 XY-110	Socket for Y-101 thru Y-110	BOARD: crystal, accommodates 10 type CR-18/U crystals	504-5009-001
XY-111	Socket for Y-111	SOCKET: crystal, for 100 kc crystal	292-0055-00
Y-101	Bands 29-30 crystal	CRYSTAL: type CR-18/U, 10666.67 kc	291-8134-00
Y-102	Bands 23-24 crystal	CRYSTAL: type CR-18/U, 13,000.000 kc	291-8102-00
Y-103	Bands 19-20 crystal	CRYSTAL: type CR-18/U, 11,000.00 kc	291-8114-00
Y-104	Bands 15-16 crystal	CRYSTAL: type CR-18/U, 9,000.00 kc	291-8083-00
Y-105	Bands 11-12, 25-56 crystal	CRYSTAL: type CR-18/U, 14,000.00 kc	291-8135-00
Y-106	Bands 9-10, 21-22 crystal	CRYSTAL: type CR-18/U, 12,000.000 kc	291-8117-00
Y-107	Bands 7-8, 17-18, 27-28 crystal	CRYSTAL: type CR-18/U, 10,000.00 kc	291-8133-00
Y-108	Bands 5-6, 13-14 crystal	CRYSTAL: type CR-18/U, 8,000.000 kc	291-8113-00
Y-109	Band 3 crystal	CRYSTAL: type CR-18/U, 6,000.00 kc	291-8132-00
Y-110	Band 1 crystal	CRYSTAL: type CR-18/U, 4,000.000 kc	291-8131-00
Y-111	Calibration crystal	CRYSTAL: special 100 kc unit	291-5954-00
Y-112	Filter crystal	CRYSTAL: type CR-7, 500 kc	291-5175-00
70E-15	Variable frequency oscillator, 2-3 mc	This unit has been dehydrated and hermetically sealed, and should be returned to the Collins Radio Company, if servicing is required.	505-0411-024

ACCESSORIES		
MECHANICAL FILTERS		
500B-08	0.8 kc bandwidth	526-9007-00
500B-14	1.4 kc bandwidth	526-9030-00
500B-31	3.1 kc bandwidth	526-9008-00
500B-60	6.0 kc bandwidth	526-9009-00
RF CONNECTOR PLUGS		
ANT. INPUT	CONNECTOR: RF coax; 52 ohm	357-9014-00
IF OUTPUT	CONNECTOR: RF coax; 52 ohm	357-9014-00

SECTION VII
ILLUSTRATIONS

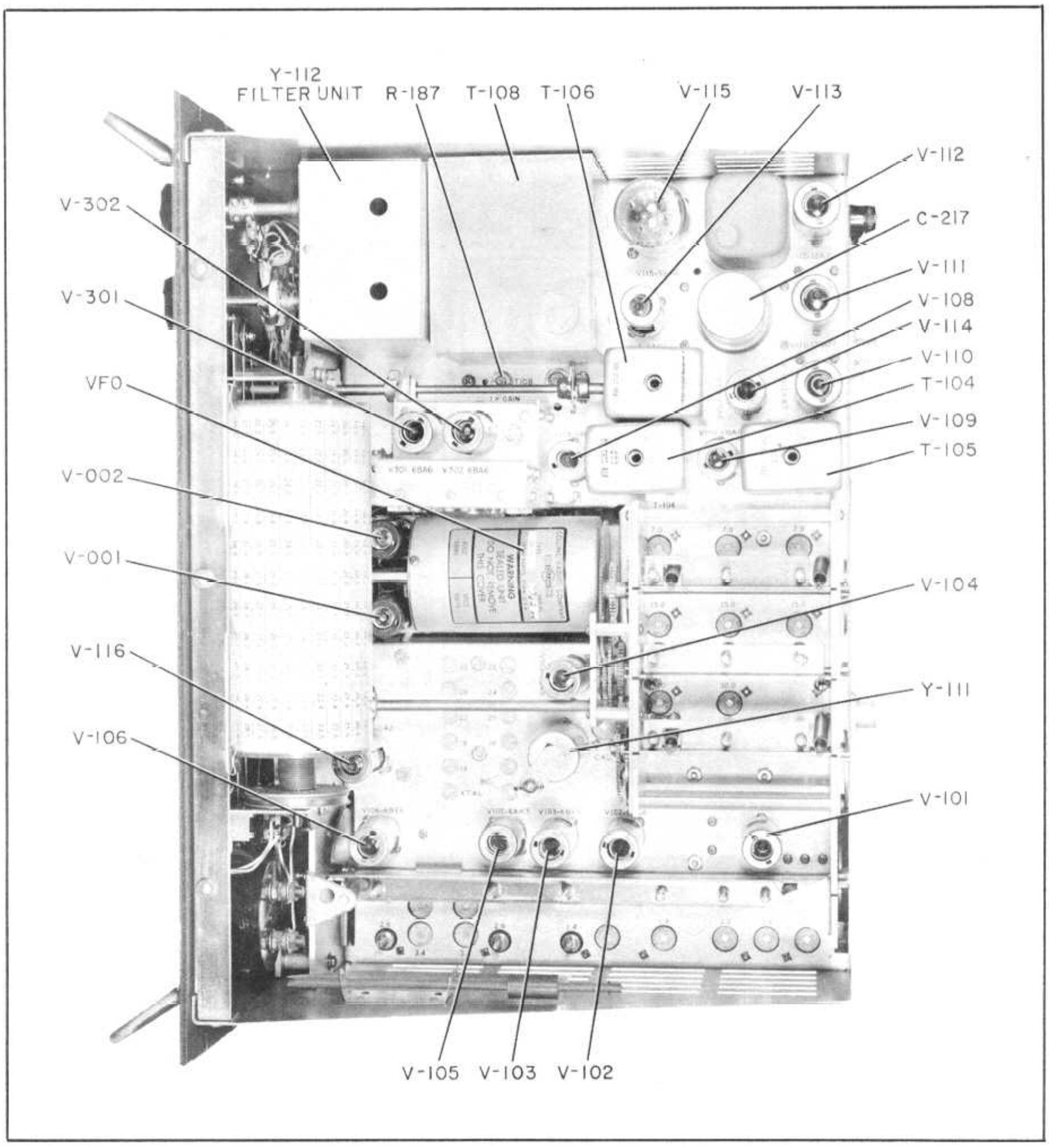

Figure 7-1. 51J-4 Top View, Tube and Parts Identification

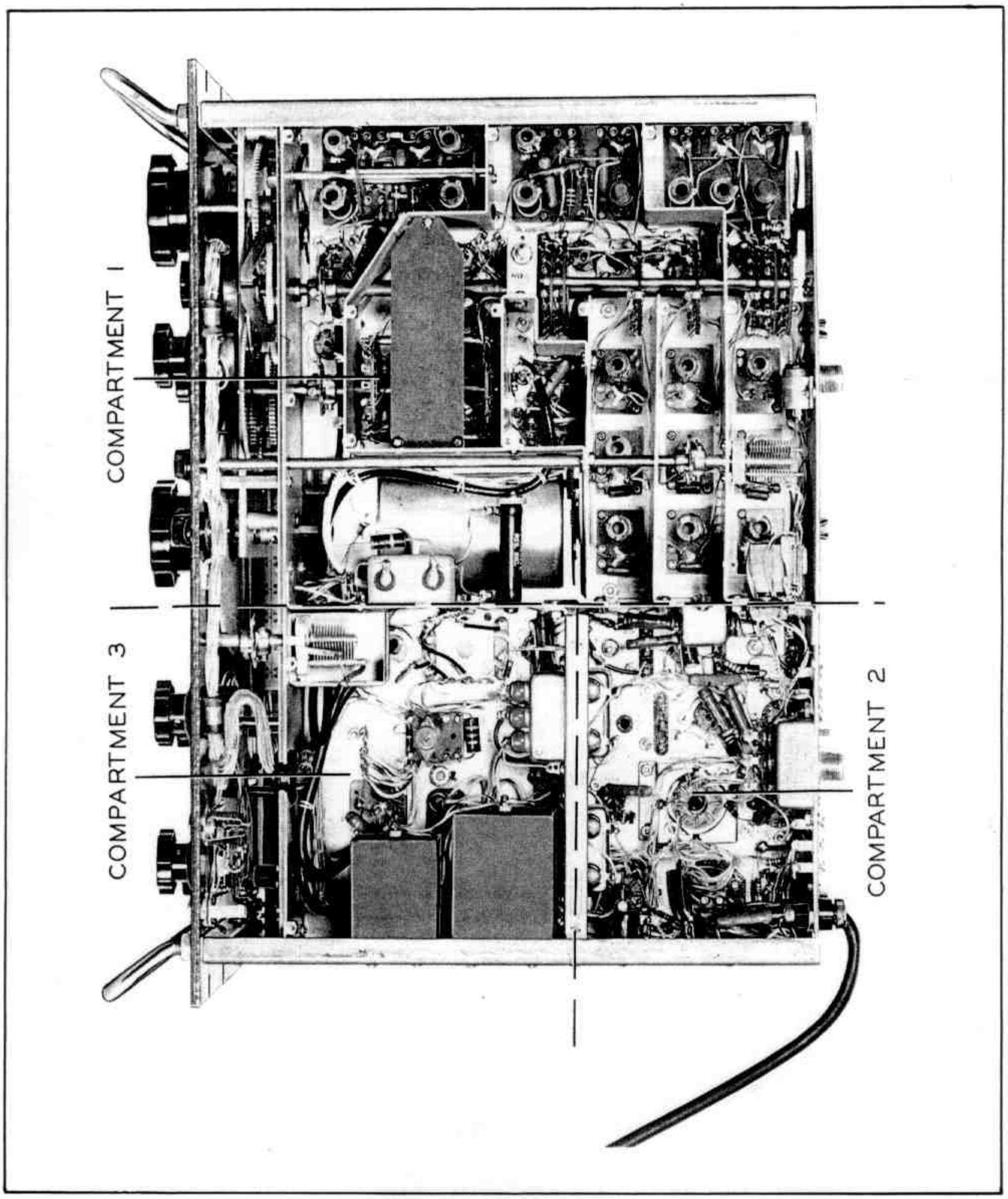

Figure 7-2. 51J-4 Bottom View

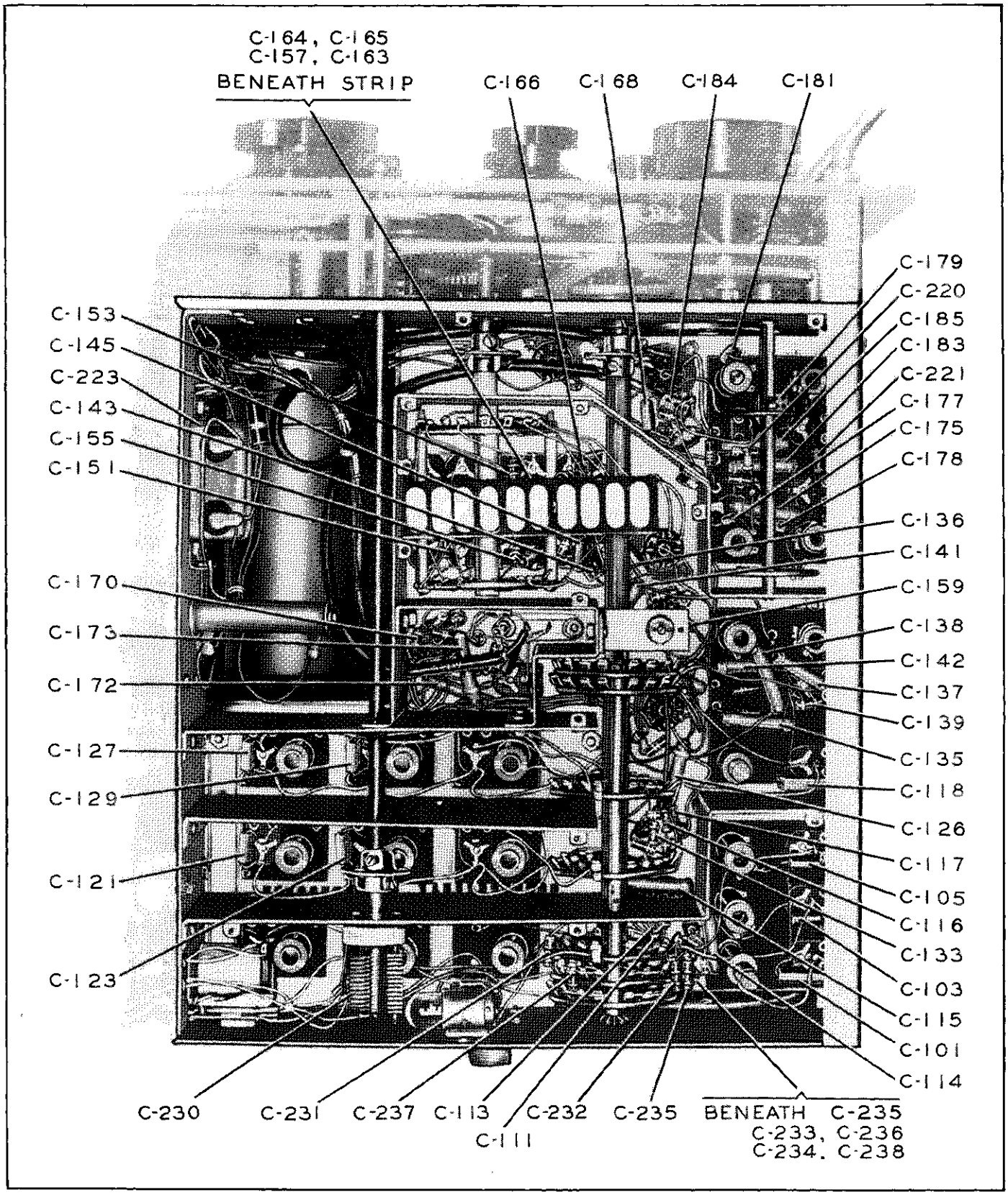

Figure 7-3. 51J-4 Bottom View, Compartment 1, Capacitor

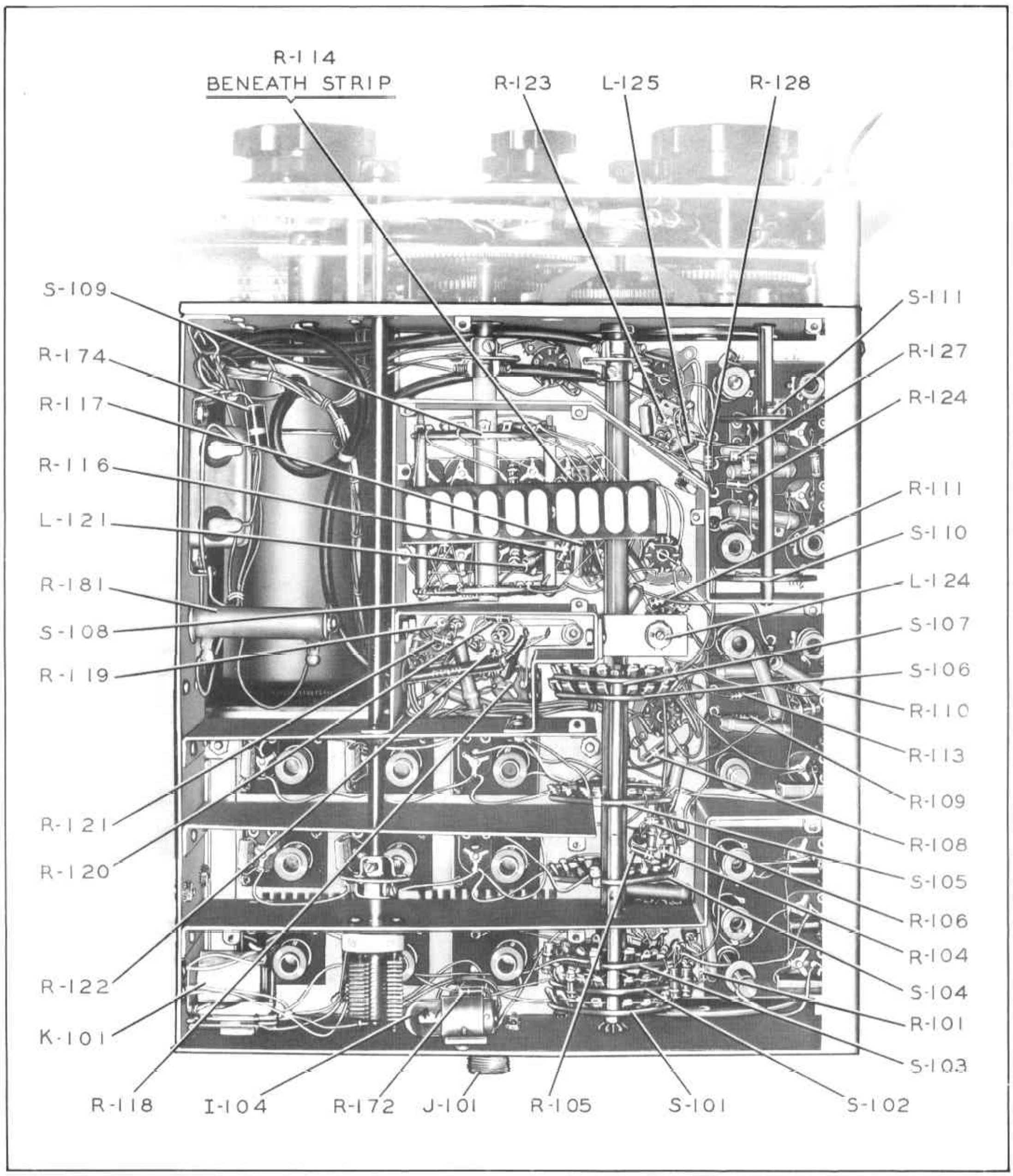

Figure 7-4. 51J-4 Bottom View, Compartment 1, General

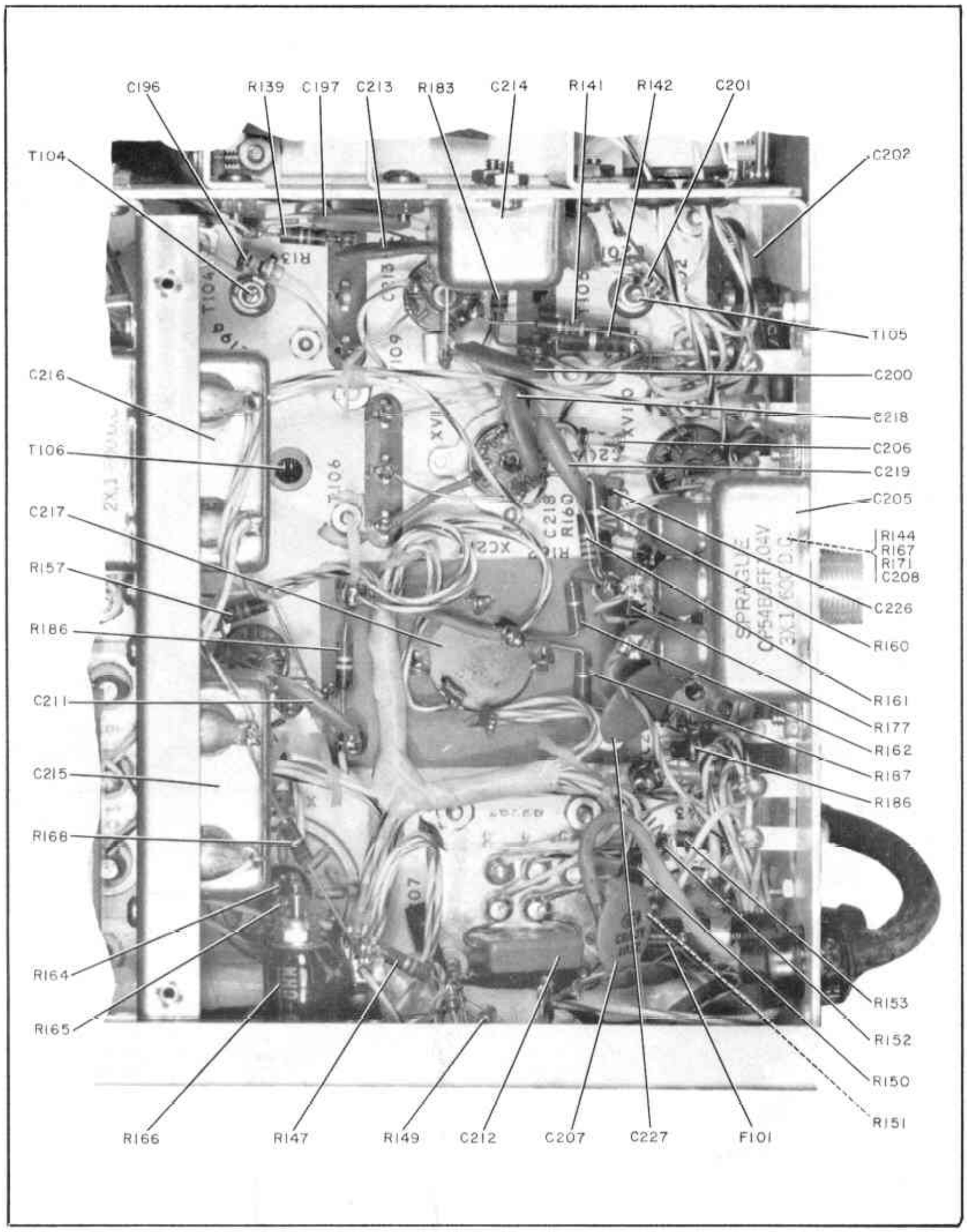

Figure 7-5. 51J-4 Bottom View, Compartment 2

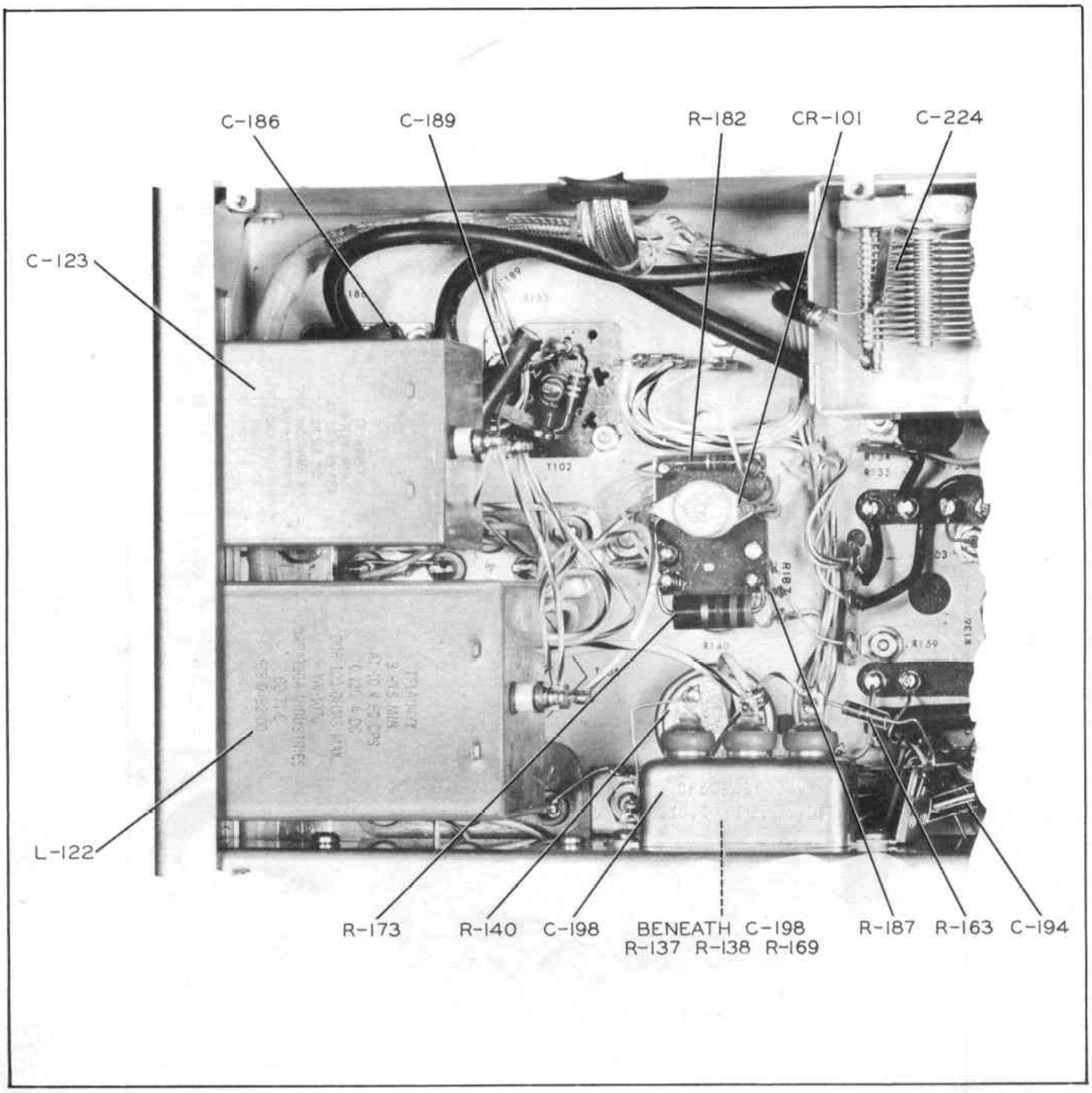

Figure 7-6. 51J-4 Bottom View, Compartment 3

LIST OF ILLUSTRATIONS

Figure	Title	Page
1-1	51J-4 Receiver, Front View and Block Diagram (C01-09-P)	1-0
2-1	51J-4 Mounting Dimensions C01-10-P	2-1
2-2	51J-4 Rear Connections C01-11-P.	2-1
2-3	51J-4 On-Off-Standby Functions and Remote Operation Relay Circuit C01-02-3.	2-2
3-1	51J-4 Operating Controls C01-18-P	3-2
3-2	Tuning (A) a Conventional Receiver; (B) and (C) the 51J-4, Using the 3KC Mechanical Filter C01-01-2	3-3
4-1	51J-4 Band Change and Tuning System, Block Diagram C01-03-4	4-1
4-2	51J-4 Mechanical Block Diagram A11-407-4	4-2
4-3	51J-4 Frequency Conversion Circuits A11-401-4.	4-4
4-4	51J-4 Crystal Filter A11-410-3.	4-8
4-5	51J-4 Crystal Filter, Simplified, Position "1" (A11-409-2)	4-8
4-6	51J-4 Crystal Phasing Rejection Notch (A11-408-1)	4-9
4-7	51J-4 Noise Limiter Circuit (A11-404-2).	4-10
4-8	51J-4 A. V. C. Circuit (A11-403-2)	4-10
5-1	51J-4 Alignment Adjustments (C01-19-P)	5-4
5-2	51J-4 Selectivity Curves (C01-04-3)	5-8
5-3	51J-4 Sensitivity Curves (A11-505-2)	5-9
5-4	51J-4 Dial and Bandswitch Gear Box (A11-414-4)	5-14
5-5	51J-4 R-F Slug Rack Drawing (1826-4)	5-18
5-6	51J-4 Dial Cord Arrangement.	5-19
5-7	51J-4 V.F.O. Adjustment Tool (2387-2)	5-23
7-1	51J-4 Top View, Tube and Parts Identification (C01-12-P)	7-1
7-2	51J-4 Bottom View C01-13-P	7-2
7-3	51J-4 Bottom View, Compartment 1, Capacitors (C01-14-P)A	7-3
7-4	51J-4 Bottom View, Compartment 1, General (C01-15-P)B	7-4
7-5	51J-4 Bottom View, Compartment 2 (C01-16-P)	7-5
7-6	51J-4 Bottom View, Compartment 3 (C01-17-P)	7-6
7-7	51J-4 Main Schematic Diagram (540-2710-006)	7-7

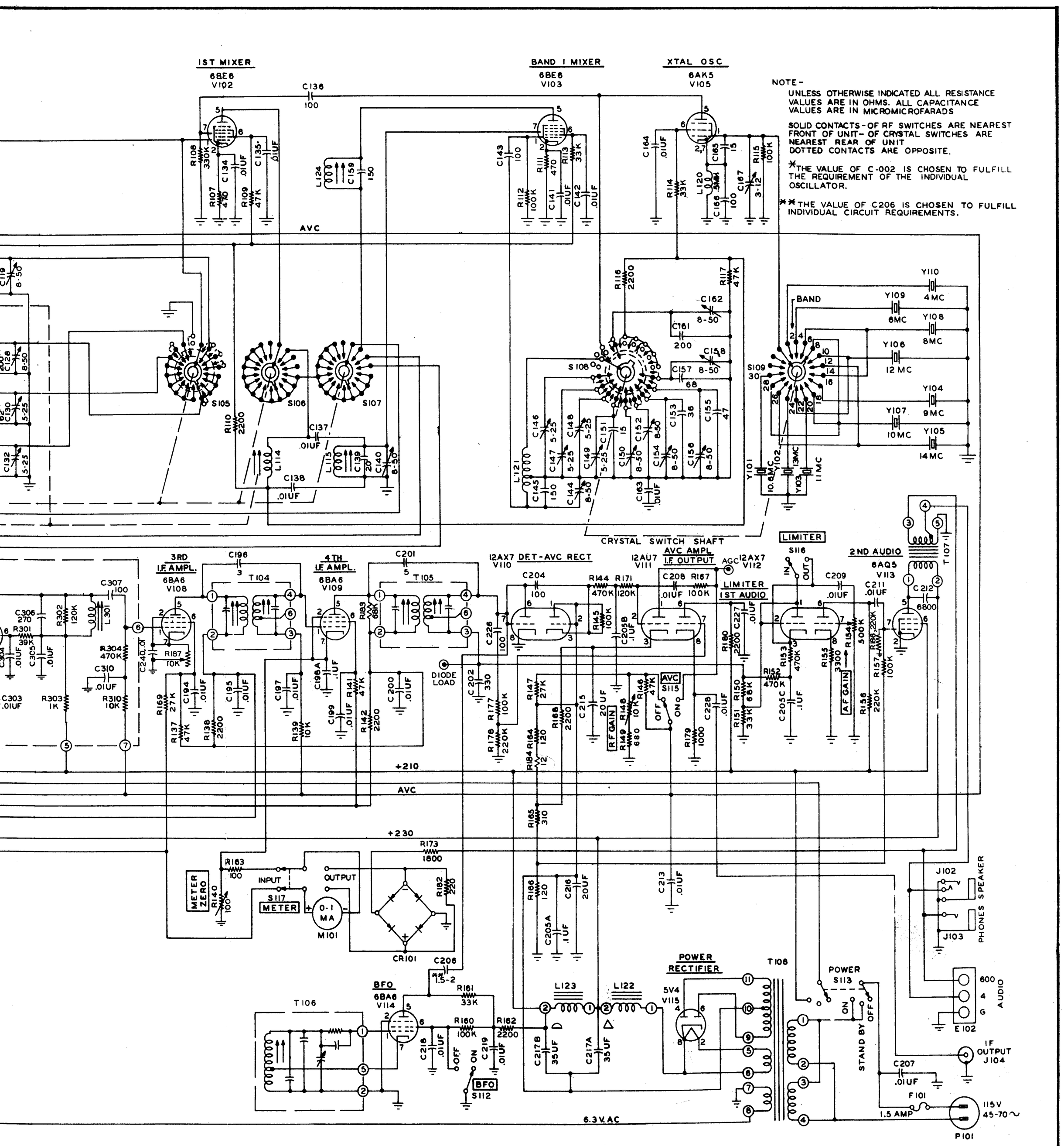

RADIO RECEIVER 51J-4

Figure 7-7. 51J-4 Main Schematic Diagram

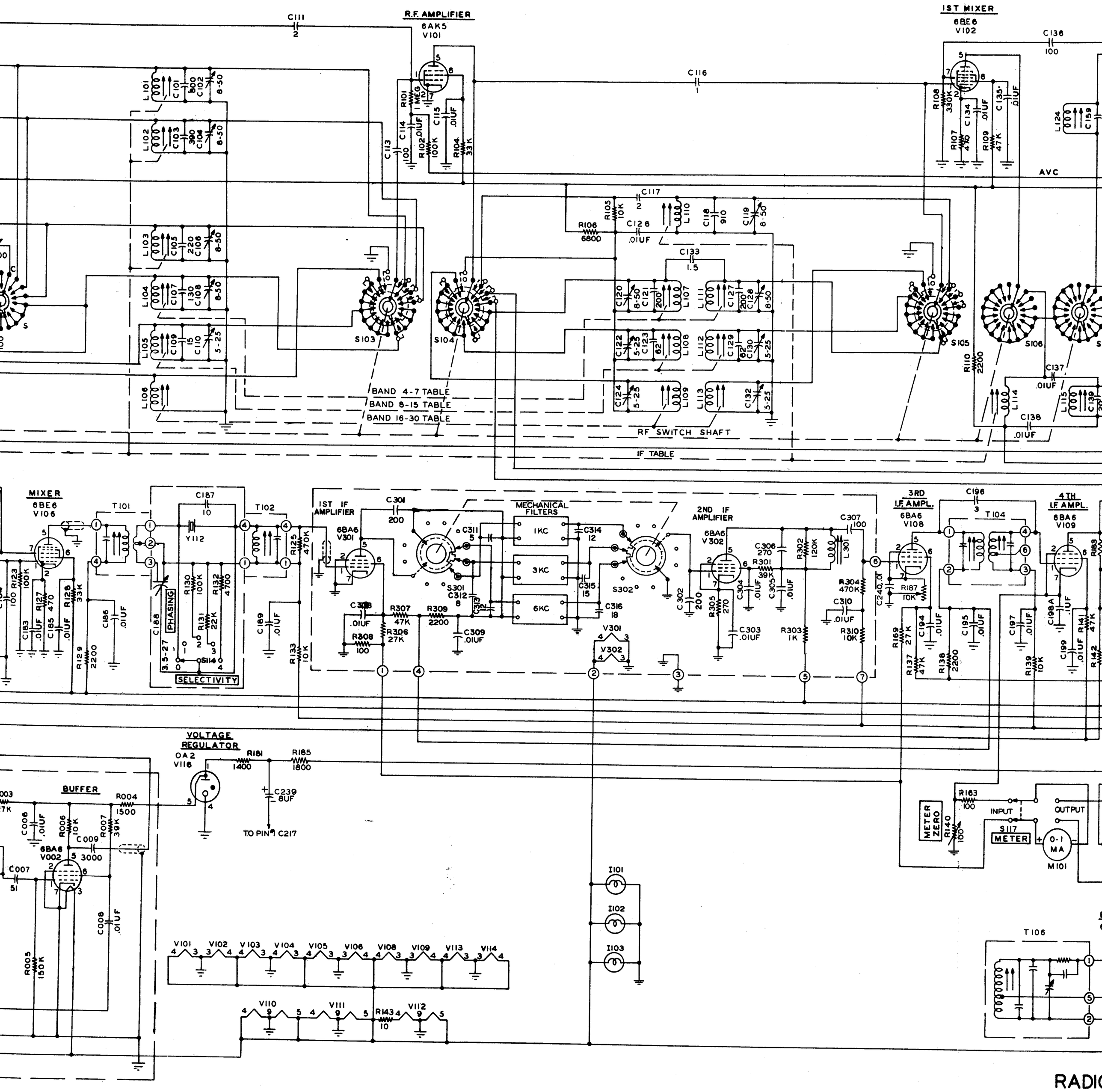
R.F. AMPLIFIER
6AK5
V101
1ST MIXER
6BE6
V102
MIXER
6BE6
V106
1ST IF AMPLIFIER
6BA6
V301
MECHANICAL FILTERS
1KC
3KC
6KC
2ND IF AMPLIFIER
6BA6
V302
3RD I.F. AMPL.
6BA6
V108
4TH I.F. AMPL.
6BA6
V109
PHASING
SELECTIVITY
VOLTAGE REGULATOR
OA2
V116
BUFFER
6BA6
V002
TO PIN 4 C217
METER ZERO
INPUT
OUTPUT
S117
METER
0-1 MA
M101
AVC
BAND 4-7 TABLE
BAND 8-15 TABLE
BAND 16-30 TABLE
RF SWITCH SHAFT
IF TABLE
T106

RADIO

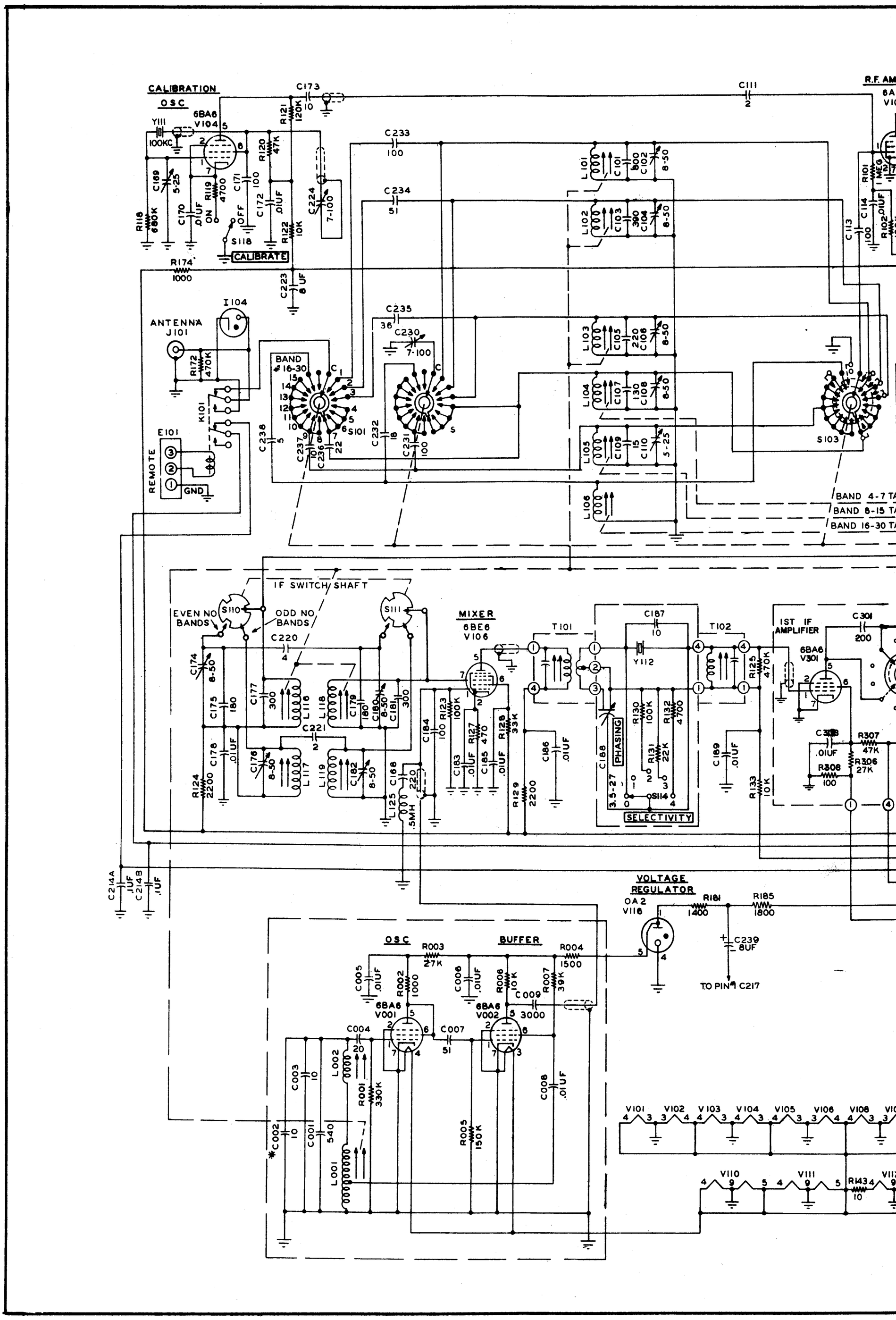
CALIBRATION OSC
6BA6 V104
Y111 100KC
C173 10
R121 120K
C111 2
R.F. AM
C233 100
C234 51
C235 36
C230 7-100
C224 7-100
R120 47K
R119 4700
C171 100
C172 .01UF
R122 10K
R118 680K
C169 5-25
C170 .01UF
S118
CALIBRATE
R174 1000
C223 8UF
I104
ANTENNA J101
R172 470K
K101
E101
REMOTE
GND
BAND 16-30
S101
C238 5
C237 10
C236 22
C232 18
C231 100
S103
L101 C101 600 C102 8-50
L102 C103 390 C104 8-50
L103 C105 220 C106 8-50
L104 C107 130 C108 8-50
L105 C109 15 C110 5-25
L106
R101 1MEG
C114 100
R102 .01UF
C113
BAND 4-7 TA
BAND 8-15 TA
BAND 16-30 TA
IF SWITCH SHAFT
EVEN NO BANDS
S110
ODD NO BANDS
S111
C220 4
MIXER 6BE6 V106
T101
C187 10
Y112
T102
IST IF AMPLIFIER
C301 200
6BA6 V301
C174 8-50
C175 180
C177 300
L116
L118
C179 180
C180 8-50
C181 300
C221 2
C176 8-50
L117
L119
C182 8-50
C178 .01UF
R124 2200
C168 220
L125 .5MH
C184 100
R123 100K
C183 .01UF
R127 470
C185 .01UF
R128 33K
R129 2200
C186 .01UF
C188
PHASING
3.5-27
R130 100K
R131 22K
R132 4700
S114
SELECTIVITY
C189 .01UF
R133 10K
R125 470K
C308 .01UF
R308 100
R307 47K
R306 27K
C214A .1UF
C214B .1UF
VOLTAGE REGULATOR
OA2 V116
R181 1400
R185 1800
C239 8UF
TO PIN 9 C217
OSC
BUFFER
R003 27K
R004 1500
C005 .01UF
R002 1000
C006 .01UF
R006 10K
R007 39K
C009 3000
6BA6 V001
6BA6 V002
C004 20
C007 51
C003 10
L002
R001 330K
C008 .01UF
C002 10
C001 540
L001
R005 150K
V101 V102 V103 V104 V105 V106 V108
V110 V111
R143 10