brother

FACSIMILE EQUIPMENT

SERVICE MANUAL

MODEL: MFC7050C

PREFACE

This publication is a Service Manual covering the specifications, construction, theory of operation, and maintenance of the Brother facsimile equipment. It includes information required for field troubleshooting and repair--disassembly, reassembly, and lubrication--so that service personnel will be able to understand equipment function, to rapidly repair the equipment and order any necessary spare parts.

To perform appropriate maintenance so that the facsimile equipment is always in best condition for the customer, the service personnel must adequately understand and apply this manual.

This manual is made up of six chapters and appendices.

CHAPTER I. GENERAL DESCRIPTION

CHAPTER II. INSTALLATION

CHAPTER III. THEORY OF OPERATION

CHAPTER IV. DISASSEMBLY/REASSEMBLY AND LUBRICATION

CHAPTER V. MAINTENANCE MODE

CHAPTER VI. ERROR INDICATION AND TROUBLESHOOTING

APPENDICES CIRCUIT DIAGRAMS

This manual describes the model and its versions to be destined for major countries. The specifications and functions are subject to change depending upon each destination.

CONTENTS

1. EQUIPMENT OUTLINE I-1

1.1 External Appearance and Weight I-1

1.2 Components I-1

2. SPECIFICATIONS I-2

1. EQUIPMENT OUTLINE

1.1 External Appearance and Weight

The figure below shows the equipment appearance and approximate dimensions.

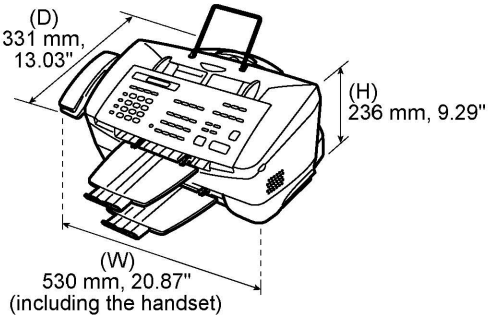

Weight:	Machine proper	Approx. 7 kg
	In package	Approx. 11 kg

1.2 Components

The equipment consists of the following major components:

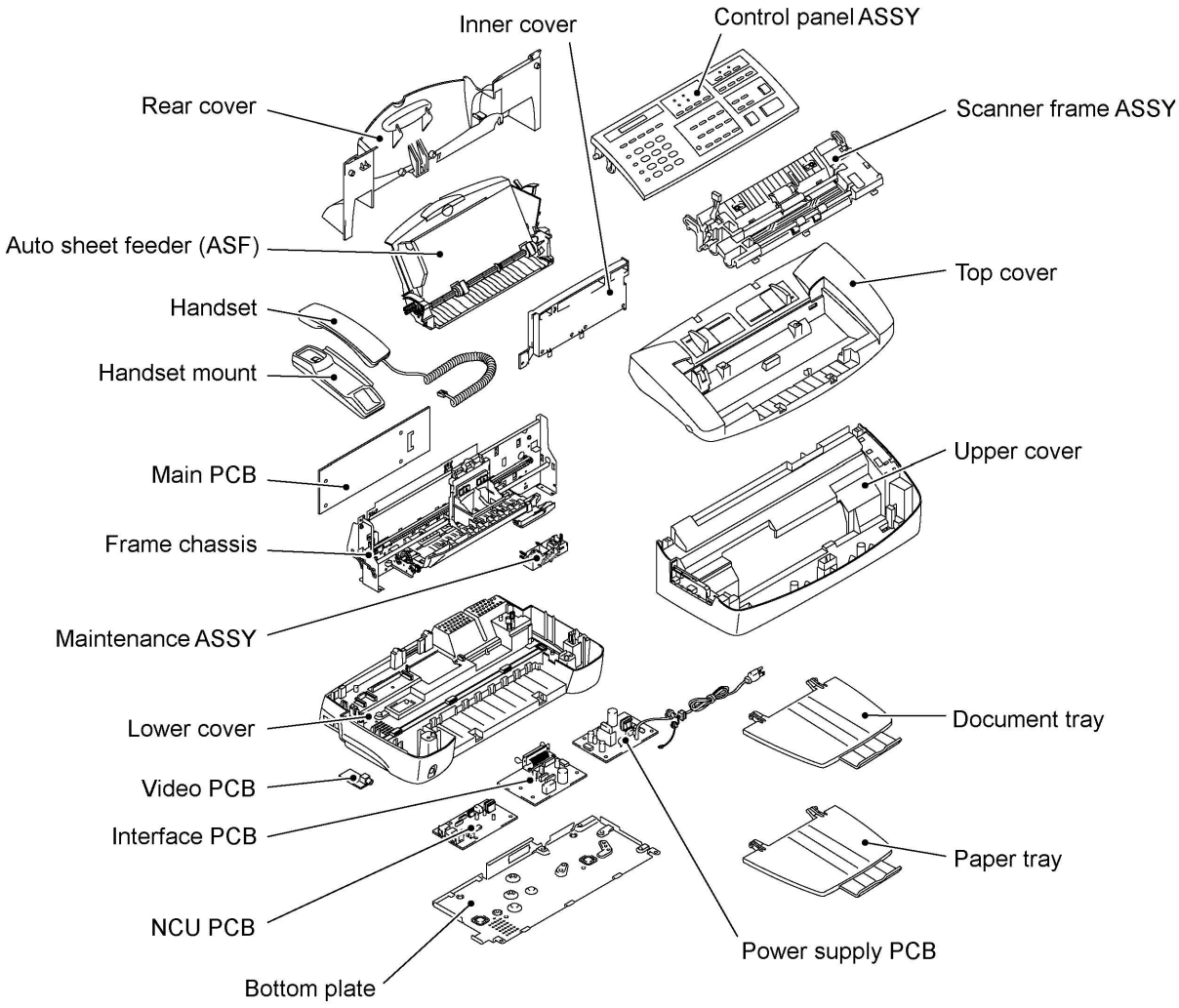

2. SPECIFICATIONS

(1/3)

Model	MFC7050C
Color	White (1138)
PRINTER	
Engine Type	Thermal ink jet
Print Speed (ppm)	Up to 6 ppm/Mono, 300 x 600 Up to 3 ppm/Color
Resolution (dpi)	1200 x 1200, 600 x 600, 300 x 600
Emulation	N/A
Printer Driver	Windows 3.1/3.11, Windows 95/98, NT Driver with Auto Installer Program
Fonts Resident	N/A
Fonts Disk Based	N/A
Paper Handling	LTR, LGL, A4, B5, A5, A6, CM10, DL, C5, C6, CUST
Auto Sheet Feeder (ASF)	Cut sheet: Min. 3" (W) x 5.0" (L) Max. 8.5" (W) X 17" (L) Envelope (C5/CM10/Mona)
ASF (Factory Std.)	1 (100 sheets)
Optional ASF	N/A
ASF Capacity (No. of sheets)	100
Number of Ink Cartridges	2
Starter Ink Cartridge Life (5% duty)	Approx. 600 pages (black) Approx. 200 pages (color) Approx. 300 pages (photo), optional
Interface	IEEE1284 (Bidirectional)
Network Card	N/A
SCANNER	
Color/Mono	Mono CIS
Resolution (dpi)	100 x 100, 200 x 200, 400 x 400, 600 x 600 (Optical 200)
Gray Scale	256 shades
Twain	Yes
Scanning Speed (ppm)	4 (Mono)
Formats	TIFF, UniDoc, PCX, DCX
ADF (pages)	20
Input Size	Letter/Legal/A4
OCR	Yes (Xerox Textbridge)
COPY	
Color Copy	N/A
Resolution (dpi)	300 x 600
Multi-copy Stack	99
Sort	Yes
Reduction/Enlargement	Yes (Ratio 50%-200%)
FAX	
Max. Modem Speed (bps)	14400
ITU-T Group	G3
Coding Method	MH/MR/MMR

Model	MFC7050C
FAX	
Error Correction Mode (ECM)	Yes
Transmission Speed (sec.)	6
Gray Scale	256 (Error Diffusion)
Super Fine	Yes (Send and Receive)
Multi-resolution TX	N/A
Handset	Yes
Speaker Phone	N/A
One-touch Dial	12 X 2
Speed Dial	100
Tel-Index	Yes
Chain Dialing	Yes
Contrast	Text (Light/Normal/Dark)
FAX/TEL Switch	Yes
Distinctive Ringing	Yes
Caller ID	Yes (name or tel number)
Call Waiting	N/A
TAD Interface	Yes
Next FAX Reservation	N/A
Coverpage	Yes - Super
Polling Type	Std/Seq
Password Check	N/A
Memory Reception	Yes (85 pages)
Delayed Timer	Yes, 1 timer
Broadcasting	Yes (Up to 174 locations)
Call Reservation	N/A
Call Back Message	N/A
ITU SUB Addressing	N/A
BFT Compatible	N/A
Color Fax Mode	N/A
Fax Edit Mode	N/A
Color File Transfer	Yes (via BFT from PC)
Multi-Transmission	N/A
DUAL ACCESS	Yes
Input/Output Width	8.5" x 8.5"
Help List	Yes
Auto Reduction	Yes
Message Center	
OGM	Yes
ICM Recording Time	Up to 30 min.
Paging	Yes
Toll Saver	Yes
Fax & Voice Mail Box	N/A
Fax-on-demand	N/A

Model	MFC7050C
Message Center	
Voice-on-demand	N/A
FAX Forwarding	Yes
FAX Retrieval	Yes
Message Center (PC MC)	N/A
OGM	N/A
ICM Recording Time	N/A
Fax-on-demand	N/A
Voice-on-demand	N/A
Fax & Voice Mail Box	N/A
FAX Forwarding	N/A
General/Additional Feature	
Energy Star Compliance	N/A
Memory (Standard)	2 MB
Memory (Opt Upgrade)	N/A
Simultaneous Operation	Yes (FAX/PRINTER, SCAN/PRINTER, COPY/PRINTER)
PC-FAX Host Software Std.	Yes
Host Interface (Scan/Print/PC-fax)	Bi Centro
Video Capture/Video Print	Yes (NTSC)
PC-Fax Protocol Compliance	CLASS 1
Data Modem	N/A
Bundled Software	
PC-FAX (Send/Receive)	Yes (SMSI)
Internet Fax	Yes (Netcentric in Visioneer)
Color Viewer	Yes (Visioneer)
Color PC-FAX	Yes (3D-Fax)

CONTENTS

1. INSTALLING THE UPDATE DATA TO THE FACSIMILE EQUIPMENT..... II-1

1. INSTALLING THE UPDATE DATA TO THE FACSIMILE EQUIPMENT

The facsimile equipment is available in two types--one with a flash ROM and the other with a masked ROM. For the equipment with a flash ROM, if the program version is updated or the main PCB is replaced, install the update program onto the flash ROM on the main PCB.

The program installation requires a host computer satisfying the following requirements:

- CPU Pentium 75 or higher
- RAM 8MB or greater (16MB recommended for Windows® 95)
- OS Windows® 3.1/3.11 or Windows® 95/98

Connecting the facsimile equipment to your computer

(1) Make sure that the equipment's power cord is unplugged from a wall socket.

(2) Make sure that your computer is powered off.

(3) Connect the interface cable to the parallel interface port on the back of the equipment and secure it with the lock wires.

(4) Connect the other end of the interface cable to the printer port of your computer and secure it with the two screws.

(5) Power on your computer.

(6) While holding down the **0** key on the control panel of the facsimile equipment, plug the power cord into a wall socket.

(7) Check that the equipment shows the "Send Flash Image" prompt on the LCD.

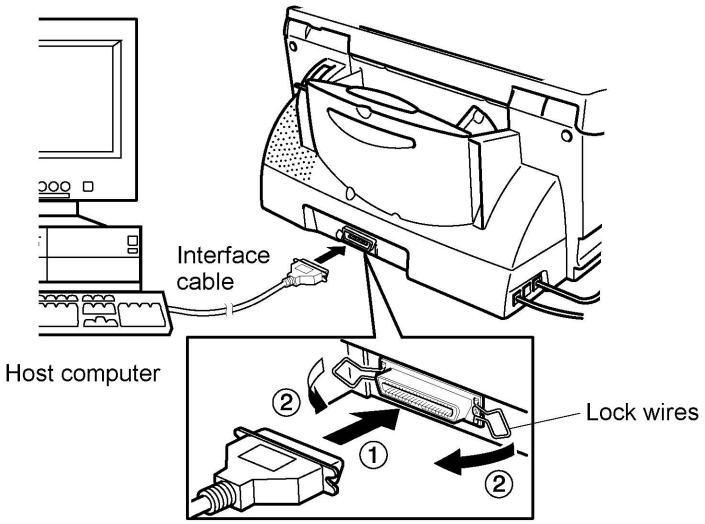

Installing the update data onto the flash ROM of the facsimile equipment

During this procedure, do not disconnect the power cord or interface cable from the facsimile equipment.

(1) Insert the floppy disk which stores the update data and transfer utility into the floppy disk drive of your computer.

(Or, copy the update data and transfer utility onto the same directory of the hard disk.)

(2) Click the Start button, point to Programs, and then click MS-DOS Prompt to open an MS-DOS window.

(3) Type the drive letter where the update data and transfer utility are located. If it is a floppy disk drive, type A:\ from the command line and press the **ENTER** key.

(4) Check that your computer is connected with the facsimile equipment correctly.

(5) To start the transfer utility transmitting the update data to the flash ROM of the facsimile equipment, type the following:

`PPP.EXE` *`filename`*

Then press the **ENTER** key.

As the installation proceeds, the equipment shows the following messages on the LCD in order:

"Receiving Image"
"Erasing Flash"
"Writing Flash"
"Verifying Flash"

Upon completion of the downloading, the equipment shows "Cycle Power Now."

Disconnecting the facsimile equipment from your computer

(1) Unplug the equipment's power cord from the wall socket.

(2) After at least 5 seconds, disconnect the interface cable from the parallel interface port on the back of the equipment.

(3) After at least 5 seconds, plug the equipment's power cord into a wall socket.

CONTENTS

1. OVERVIEW III-1

2. MECHANISMS III-2

2.1 Scanner Mechanism III-3

2.1.1 Document feeding and ejecting mechanism III-4

2.1.2 Scanner III-4

2.2 Ink Jet Printing Mechanism III-5

2.2.1 Paper pulling-in, registration, feeding, and ejecting mechanisms III-5

2.2.2 Ink jet printing and capping mechanisms III-8

2.2.3 Carrier drive mechanism III-10

2.3 Sensors and Actuators III-11

3. CONTROL ELECTRONICS III-13

3.1 Configuration III-13

3.2 Main PCB III-14

3.3 NCU PCB III-16

3.4 Control Panel PCB III-17

3.5 Power Supply PCB III-18

3.6 Interface PCB III-19

1. OVERVIEW

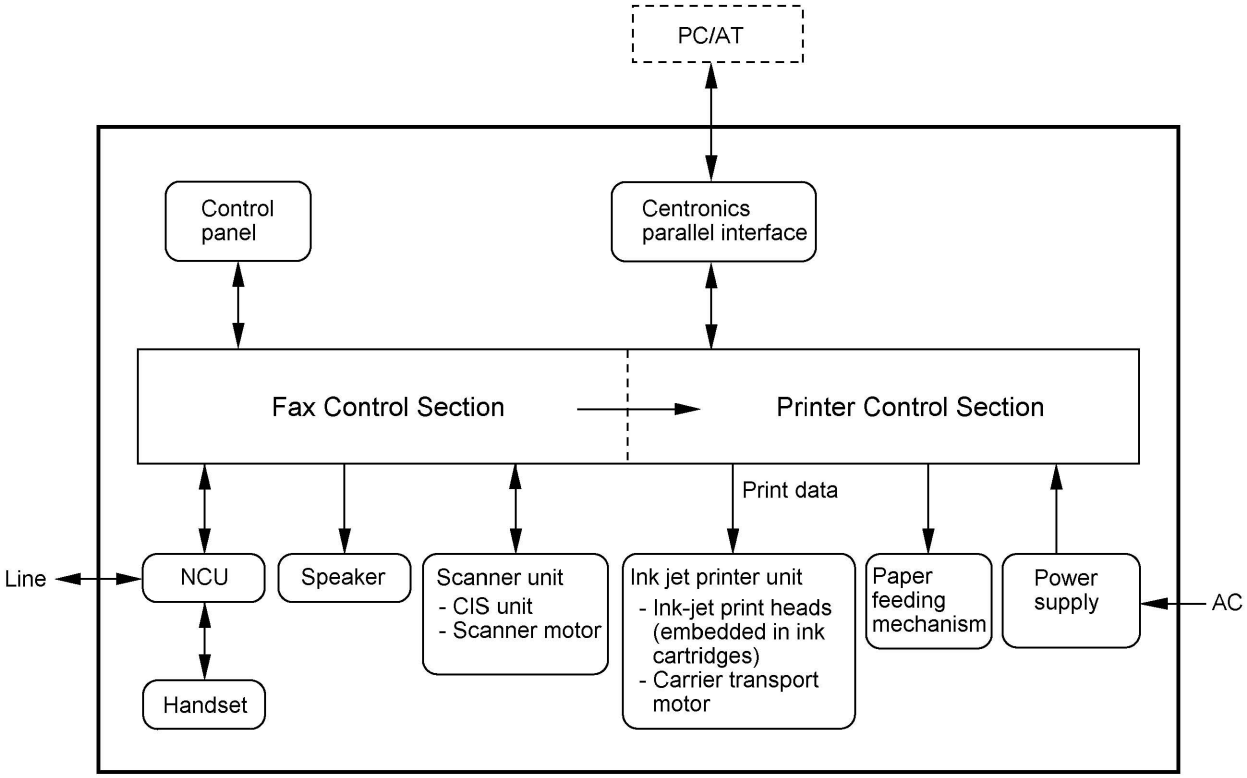
PC/AT
Control panel
Centronics parallel interface
Fax Control Section
Printer Control Section
Print data
Line
NCU
Speaker
Scanner unit
- CIS unit
- Scanner motor
Ink jet printer unit
- Ink-jet print heads (embedded in ink cartridges)
- Carrier transport motor
Paper feeding mechanism
Power supply
AC
Handset

2. MECHANISMS

The equipment is classified into the following mechanisms:

- SCANNER MECHANISM
  - Document feeding and ejecting mechanism
  - Document scanning mechanism
- INK JET PRINTING MECHANISM
  - Paper pulling-in, registration, feeding, and ejecting mechanisms
  - Ink jet printing and head capping mechanisms
  - Carrier drive mechanism
- SENSORS AND ACTUATORS

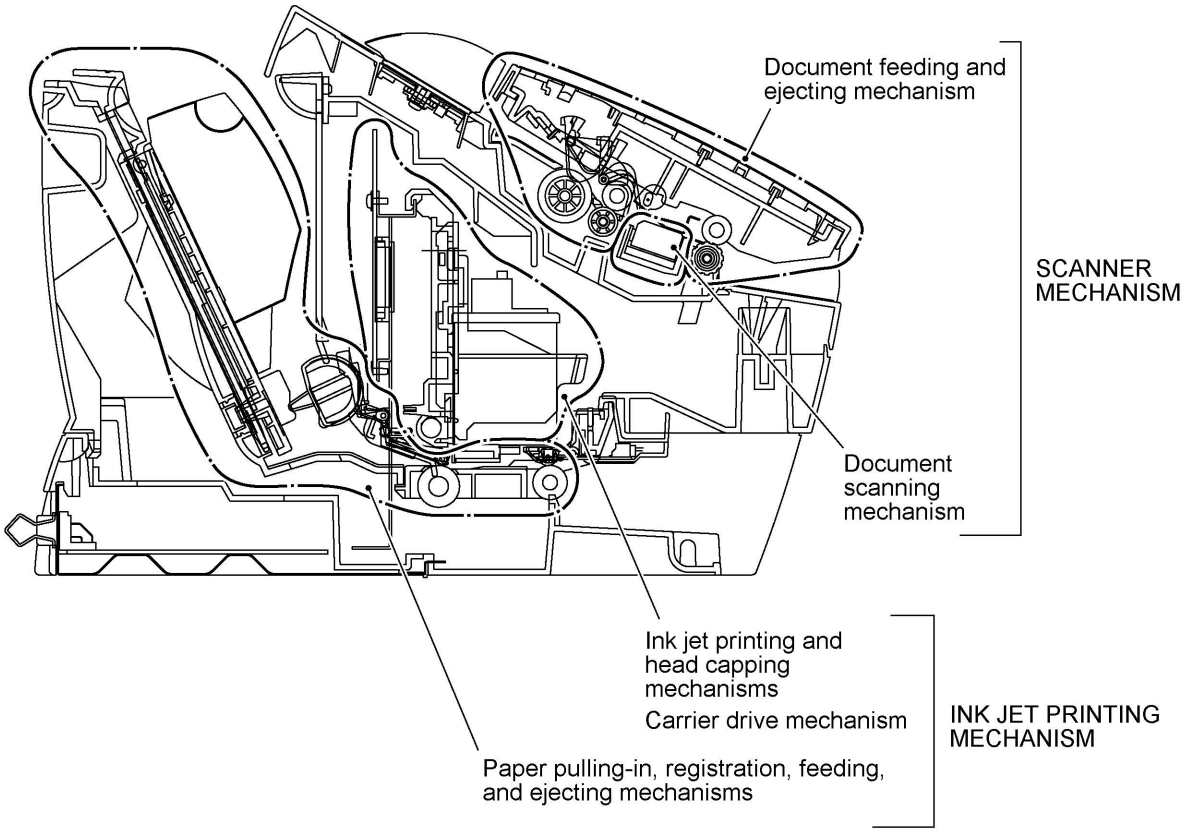

2.1 Scanner Mechanism

This mechanism consists of the top cover, automatic document feeder (ADF), document feed roller ASSY, document ejection roller ASSY, and document sensors. (For details about the sensors, refer to Section 2.3.)

If the operator sets documents on the top cover and starts the scanning operation, the scanner motor rotates so that the ADF (which consists of the separation roller ASSY and ADF parts) feeds those documents into the equipment, starting from the bottom sheet to the top, page by page. Each document advances with the document feed roller ASSY to the scanner, and then it is fed out of the equipment with the document ejection roller ASSY.

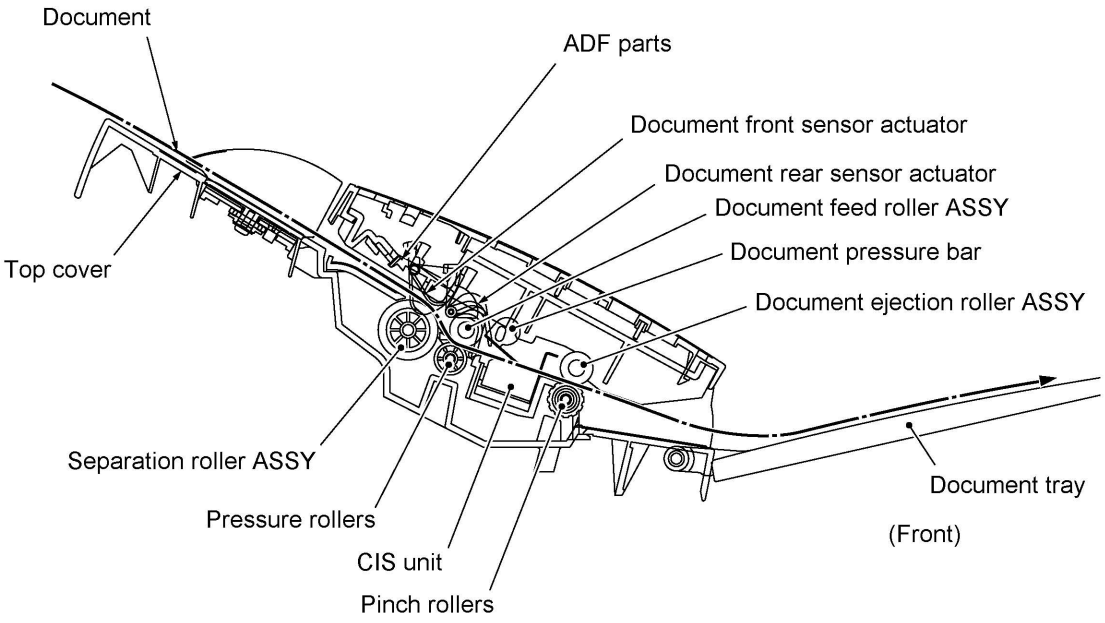

2.1.1 Document feeding and ejecting mechanism

To feed and eject documents, the scanner motor rotates counterclockwise. It rotates the sun gear 19/55 clockwise so that the planet gear 23 ASSY transmits the torque to the gear 19/47 and its gear train.

After completion of paper ejection, the scanner motor rotates clockwise in order to disengage the planet gear 23 ASSY from the gear 19/47. This allows you to pull back a document if jammed in the backward direction.

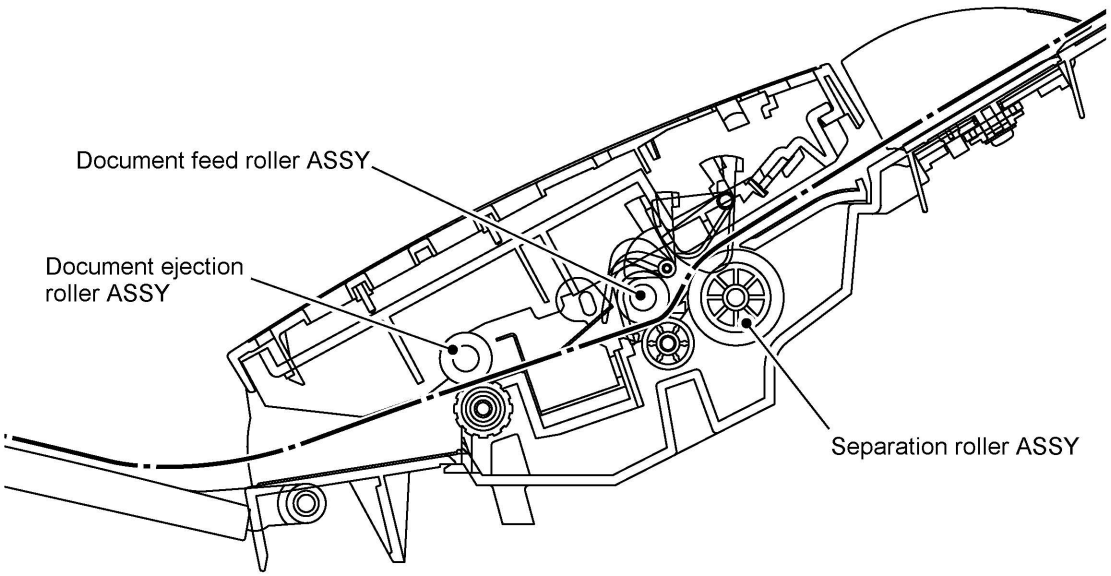

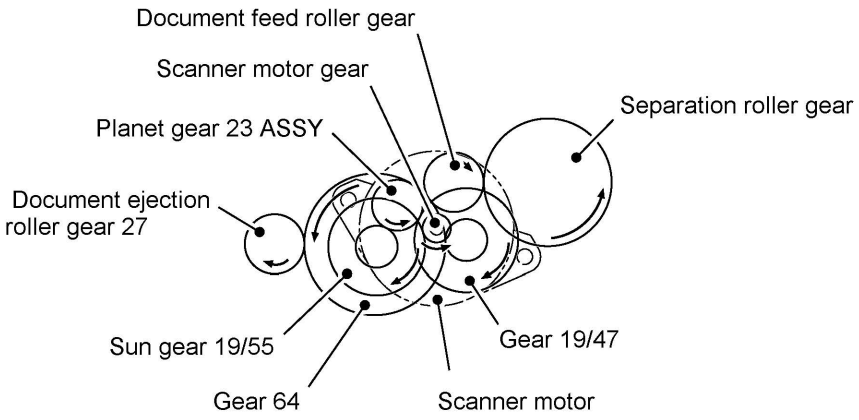

(Viewed from the right)

2.1.2 Scanner

The scanner uses a contact image sensor (CIS) unit which consists of an LED array illuminating documents, a self-focus lens array collecting the reflected light, a CIS PCB carrying out photoelectric conversion to output picture element data, and a cover glass on which a document advances. When the document passes between the document pressure bar and the cover glass, it is scanned.

2.2 Ink Jet Printing Mechanism

2.2.1 Paper pulling-in, registration, feeding, and ejecting mechanisms

The paper pulling-in, registration, feeding, and ejecting mechanisms are driven by a single paper feed motor.

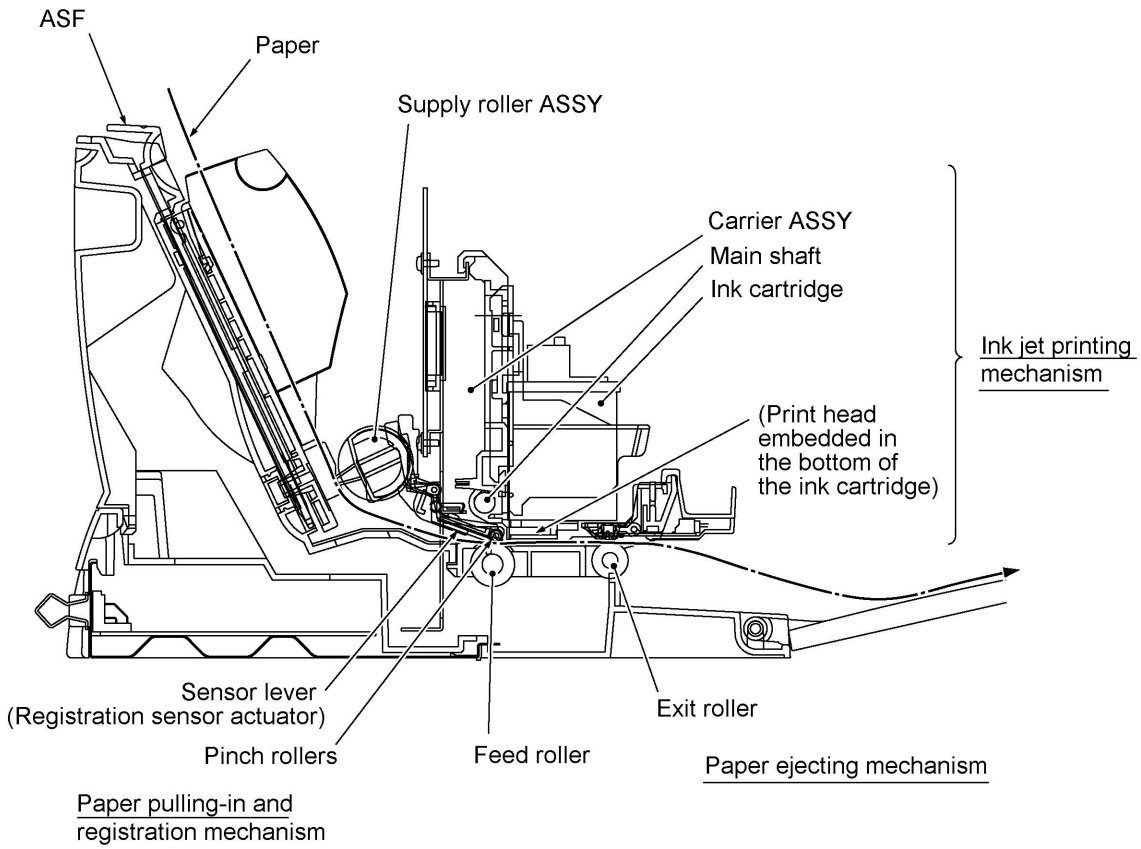

Paper pulling-in and registration mechanism

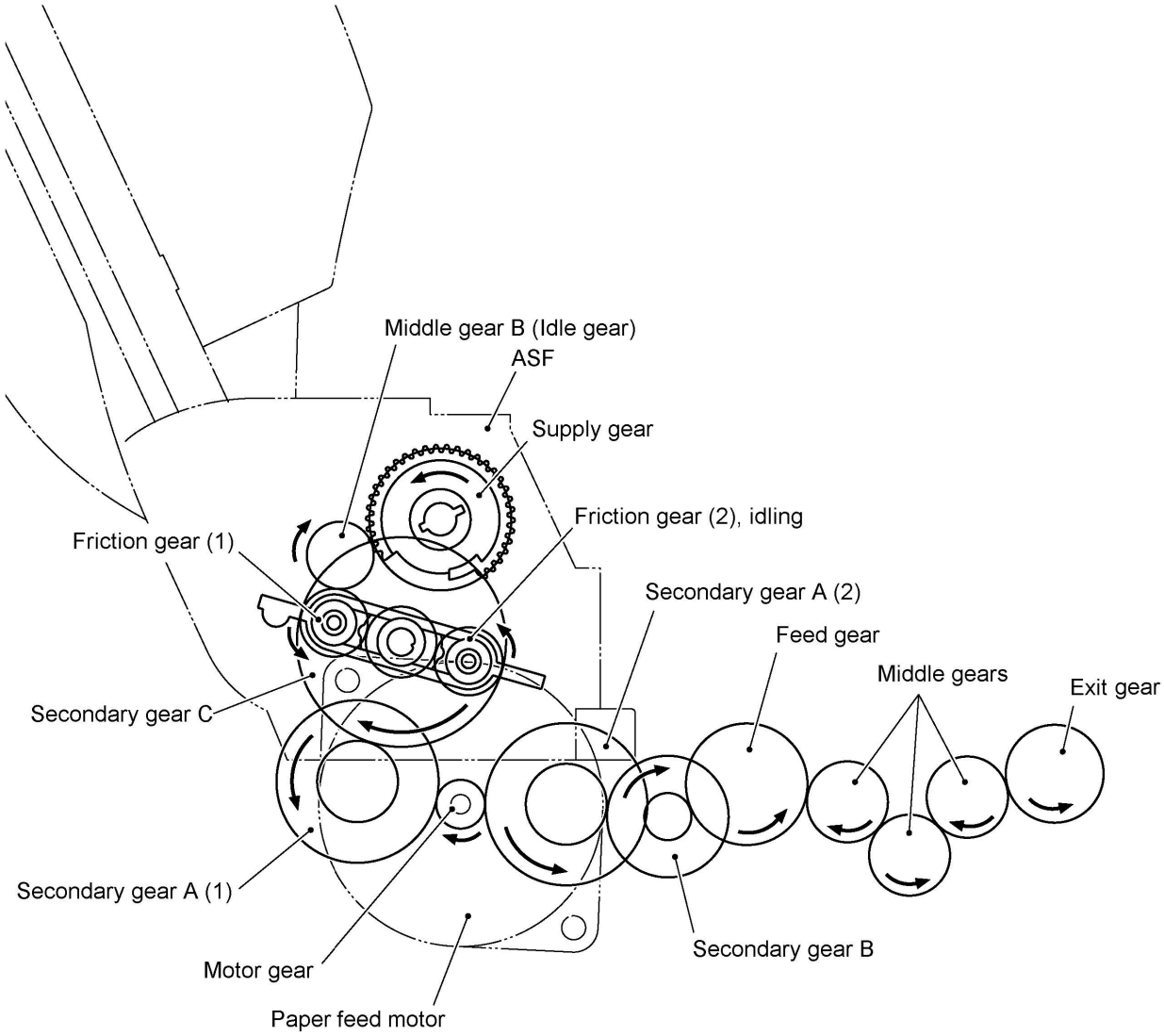

If the paper feed motor rotates clockwise, the rotational torque is transmitted via the gear train to the supply gear built in the auto sheet feeder (ASF). The supply gear rotates once counterclockwise to pull in paper from the ASF, a sheet at a time. Since the gear is a sector gear, it will stop when the toothless section comes to the joint with the mating middle gear B (idle gear).

The motor continues to rotate clockwise for driving the registration mechanism. The rotational torque is transmitted via the gear train to the feed gear that rotates counterclockwise. This registers the leading edge of the pulled-in paper.

Paper feeding and ejecting mechanism

If the paper feed motor rotates counterclockwise, the rotational torque is transmitted via the gear train to the feed gear that rotates clockwise to feed paper. The torque is further transmitted via the middle gears to the exit gear.

After the paper passes through the print head, it will be ejected onto the paper tray.

The rotational torque is transmitted also to the friction gear (2) which is engaged with the teeth of the supply gear, so the supply gear rotates and comes back to the initial position.

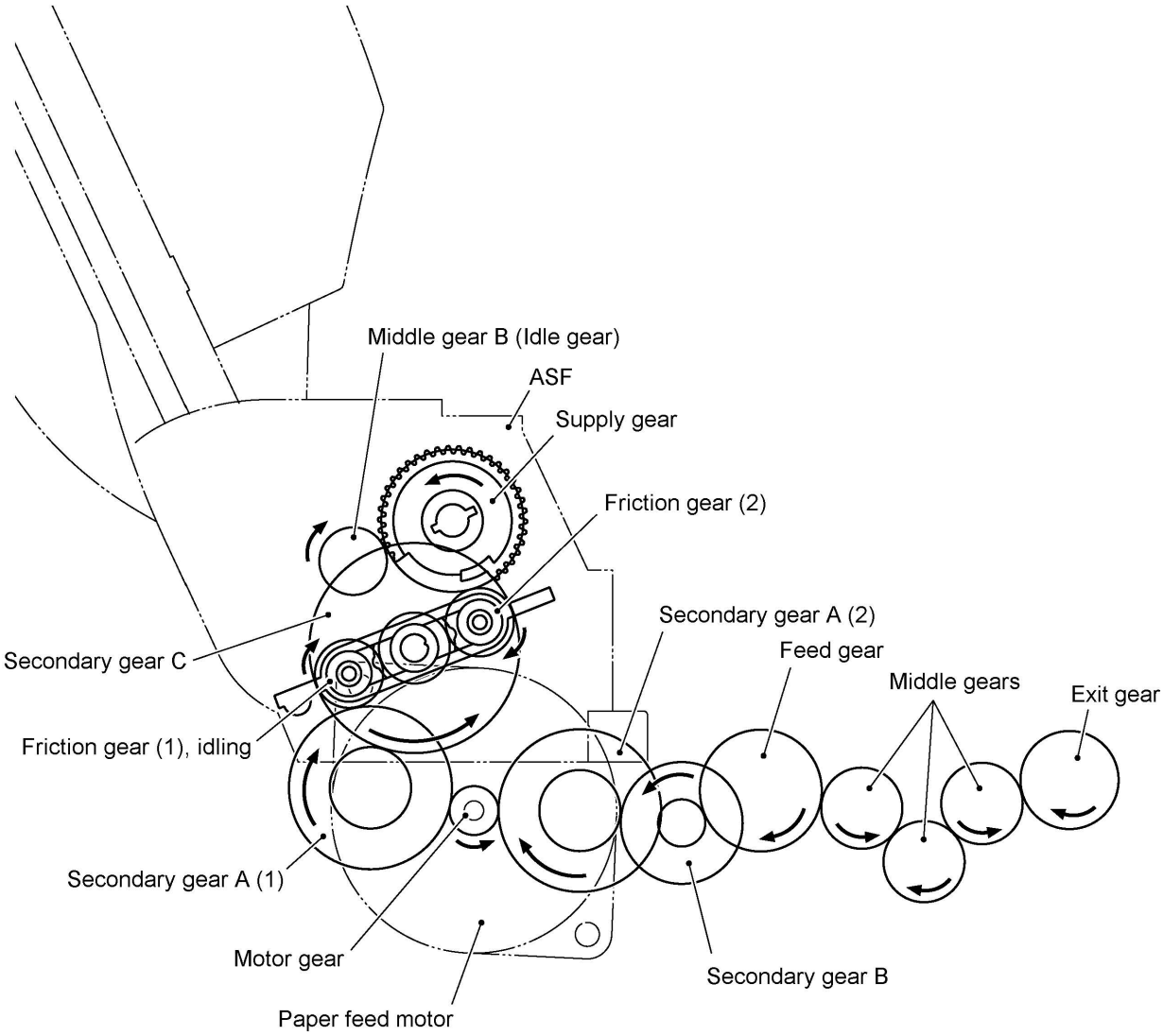

2.2.2 Ink jet printing and capping mechanisms

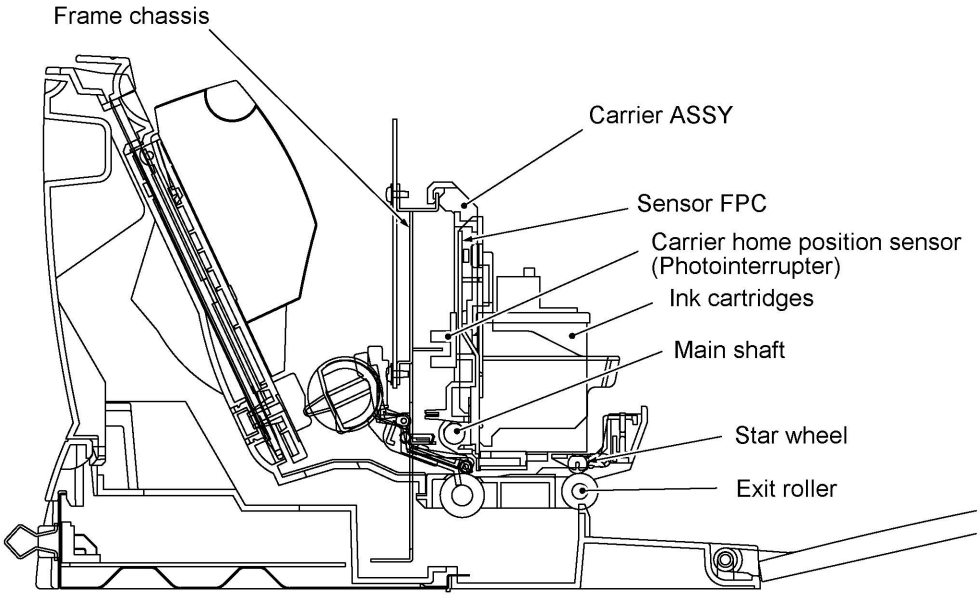

(Viewed from the left)

(1) Ink jet printing

This equipment uses drop-on-demand ink jet printing. The black cartridge and color cartridge install in the carrier, each of which has an embedded thermal ink-jet head. The dual heads provide color and true black printing without changing ink cartridges.

If you replace the black cartridge with an optional photo cartridge (containing black, light cyan, and light magenta ink), the dual heads provide color and photo-quality printing.

The ink-jet head of the black cartridge has a total of 208 nozzles. That of the color cartridge and photo cartridge has a total of 192 nozzles for three colors of ink (64 nozzles/color).

As the carrier holding the ink cartridges travels at the printing speed, the character generator sends print command pulses to the circuits driving the thermal ink-jet heads embedded in the ink cartridges.

(2) Head capping and cleaning with head wipers

Shown below are head capping and cleaning mechanisms. Upon completion of printing, the carrier travels rightwards to the home position and moves the head cap lever of the head cap unit to the right, bringing the head cap unit up to the position where the head caps come into tight contact with the print heads. Capping the nozzles of the print heads this way prevents them from drying up or becoming dirtied with dust when they are not in use. If the carrier travels to the left for printing, the head cap unit goes down to the previous position with the springs.

The above head capping mechanism moves also the head wiper unit up. When the carrier travels to the left, the wipers clean ink remaining on the head surfaces and then the carrier's boss presses the wiper release lever to return the wiper unit down to the previous position.

Head capping

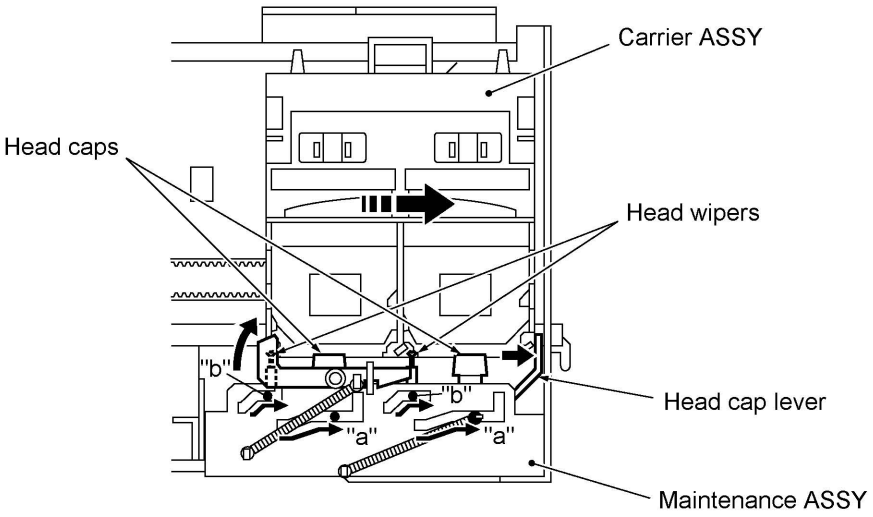

"a": Head cap unit guides
"b": Wiper unit guides

Cleaning with head wipers

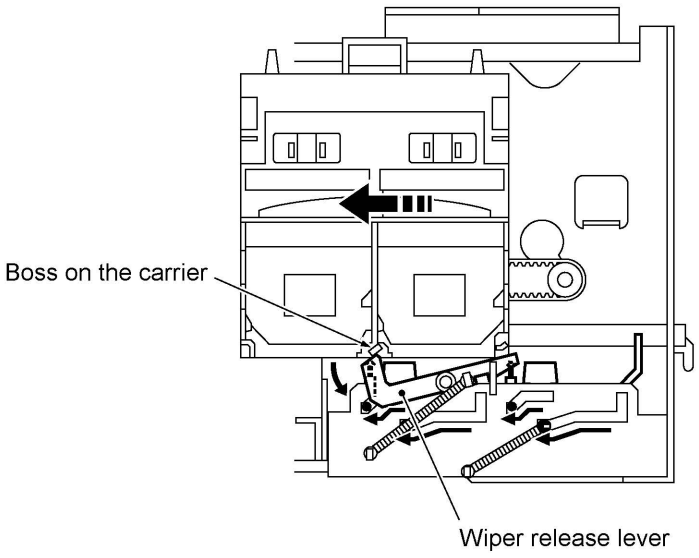

2.2.3 Carrier drive mechanism

The carrier transport motor controls horizontal motion. The motor rotation is transmitted via the motor pulley to the timing belt.

The carrier, which is supported and guided by the main shaft, is secured to the timing belt. Clockwise and counterclockwise rotations of the carrier transport motor move the carrier to the right and left, respectively.

On the back of the carrier is the carrier home position sensor (photointerrupter) which tells the control circuitry whether the carrier is in the home position.

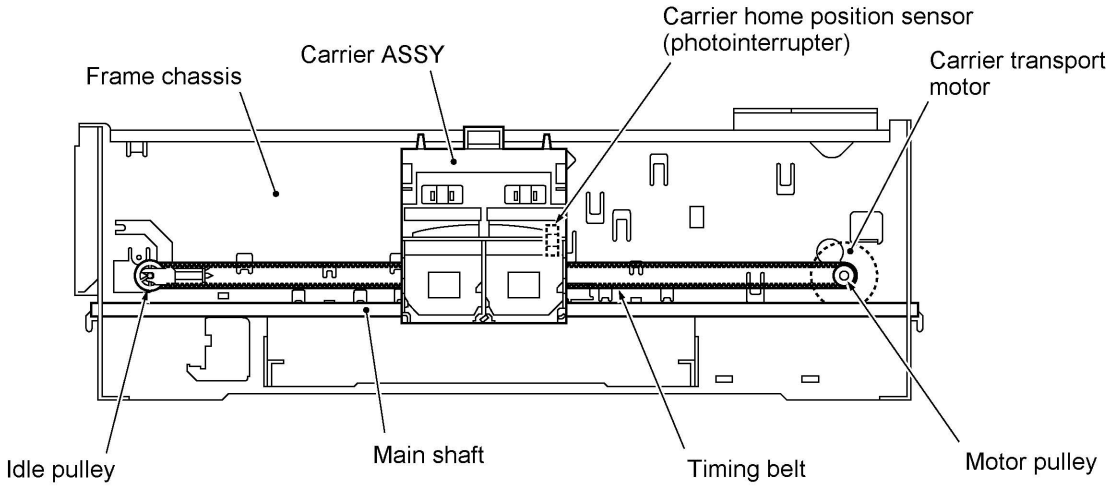

2.3 Sensors and Actuators

This equipment has the following sensors:

Sensor name	Type	Located on
Hook switch sensor	Mechanical switch	Hook switch PCB in the handset mount
Cover sensor	Mechanical switch	Cover sensor PCB
Registration sensor	Photosensor	Main PCB
Document front sensor	Photosensor	Document sensor PCB of the control panel PCB ASSY
Document rear sensor	Photosensor	Document sensor PCB of the control panel PCB ASSY
Ink empty sensor	Photosensor	Ink empty sensor PCB
Carrier home position sensor	Photosensor	Sensor FPC

- Hook switch sensor which detects whether the handset is placed on the handset mount.
- Cover sensor which detects whether the top cover is closed.
- Registration sensor which detects the leading and trailing edges of paper, which allows the controller to determine the registration timing and check paper jam.
- Document front sensor which detects the presence of documents.
- Document rear sensor which detects the leading and trailing edges of pages to tell the control circuitry when the leading edge of a new page has reached the starting position and when the scan for that page is over.
- Ink empty sensor which detects the density of a printed ink-empty mark.
- Carrier home position sensor which detects whether the carrier is in the home position.

Each of the above photosensors consists of a light-emitting diode and a light-sensitive transistor. The ink empty sensor is a reflection type. Other photosensors are a photointerrupter having an actuator separately arranged as shown on the next page.

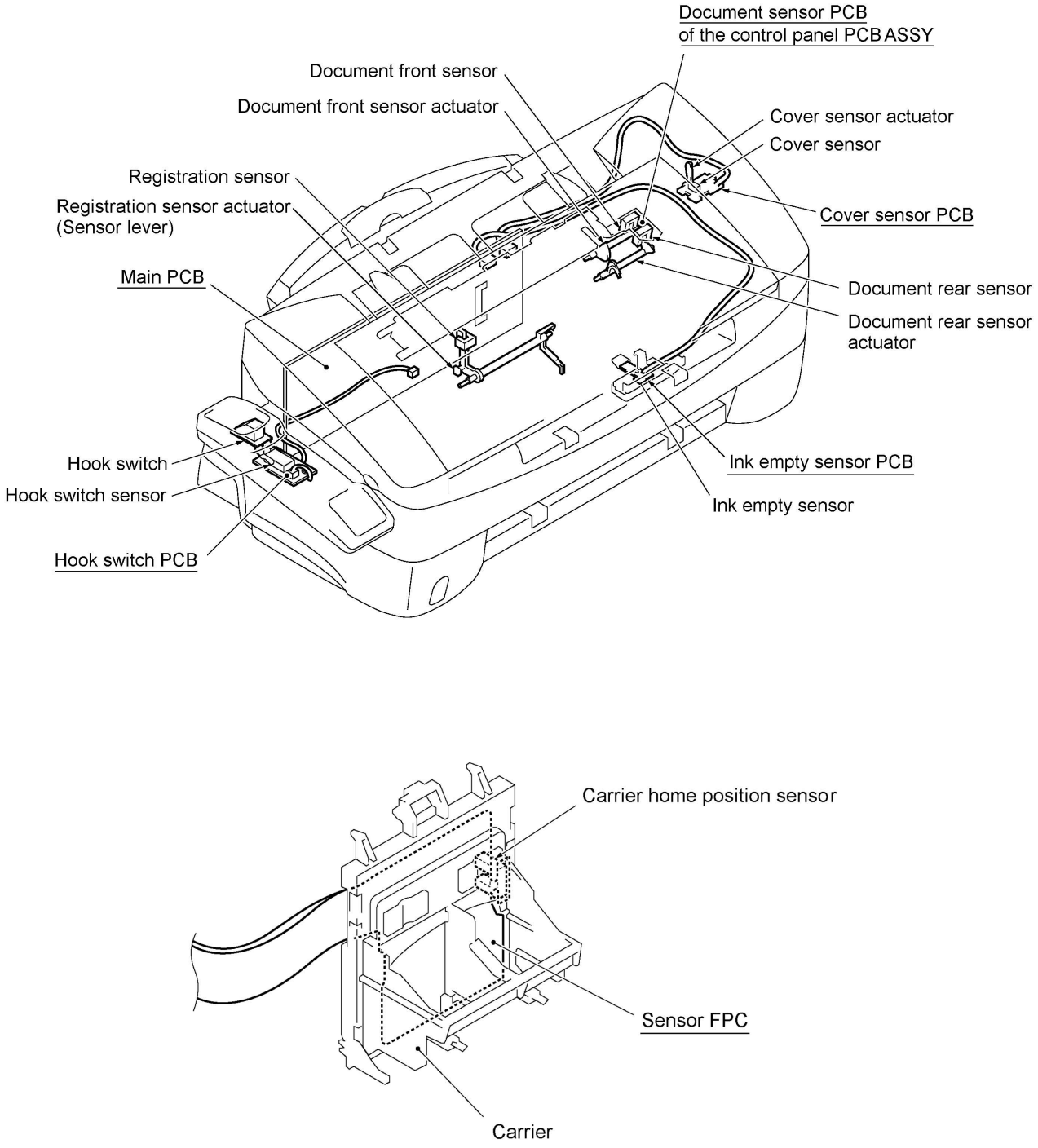

Location of Sensors and Actuators

3. CONTROL ELECTRONICS

3.1 Configuration

The hardware configuration of the facsimile equipment is shown below.

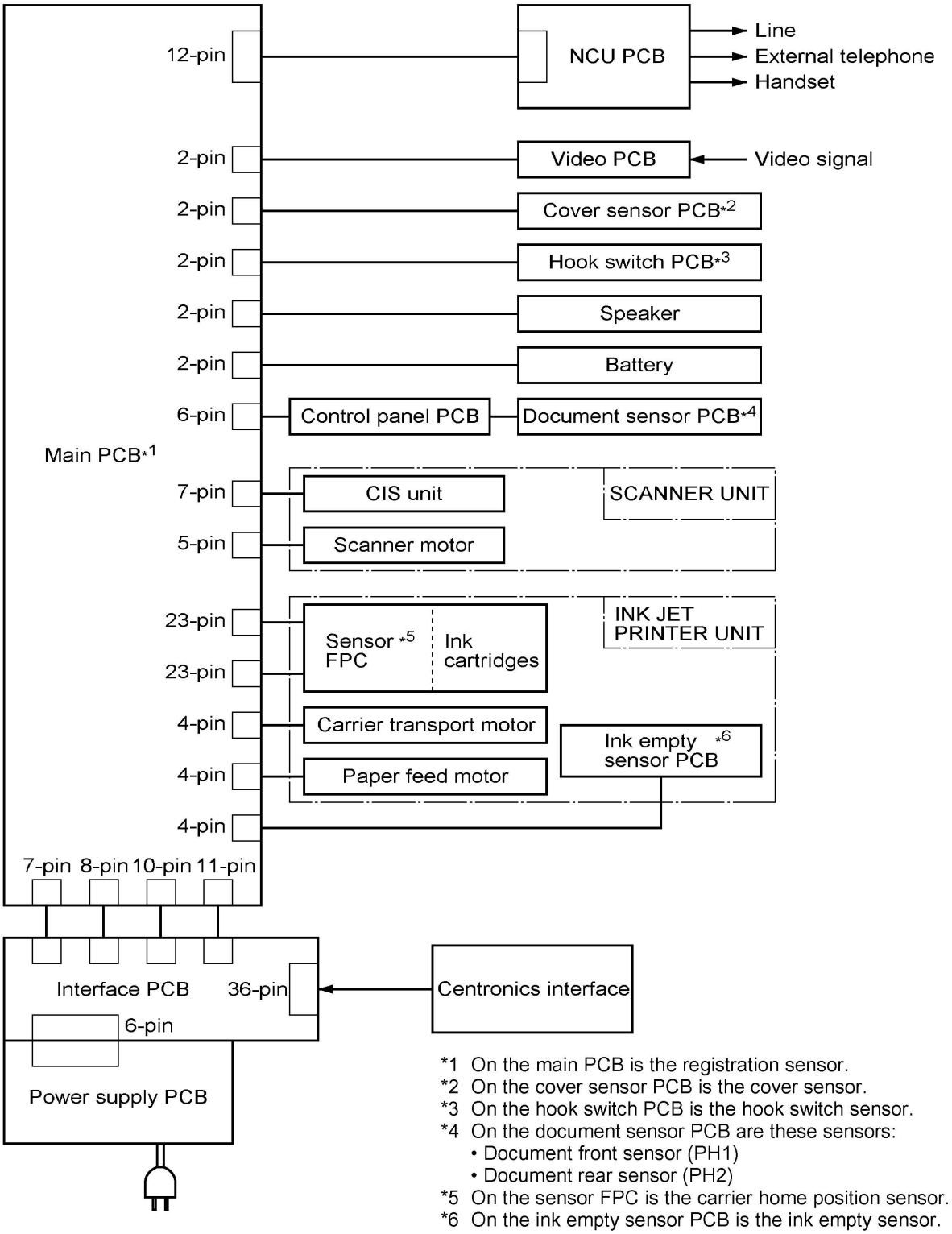

*1 On the main PCB is the registration sensor.
*2 On the cover sensor PCB is the cover sensor.
*3 On the hook switch PCB is the hook switch sensor.
*4 On the document sensor PCB are these sensors:
- Document front sensor (PH1)
- Document rear sensor (PH2)

*5 On the sensor FPC is the carrier home position sensor.
*6 On the ink empty sensor PCB is the ink empty sensor.

Configuration of Facsimile Equipment

3.2 Main PCB

The main PCB, which is the nucleus controlling the entire operation of the equipment, consists of an ASIC, gate array, memories, MODEM, motor drive circuitry, sensor detection circuitry, and analog circuits for scanning and printing.

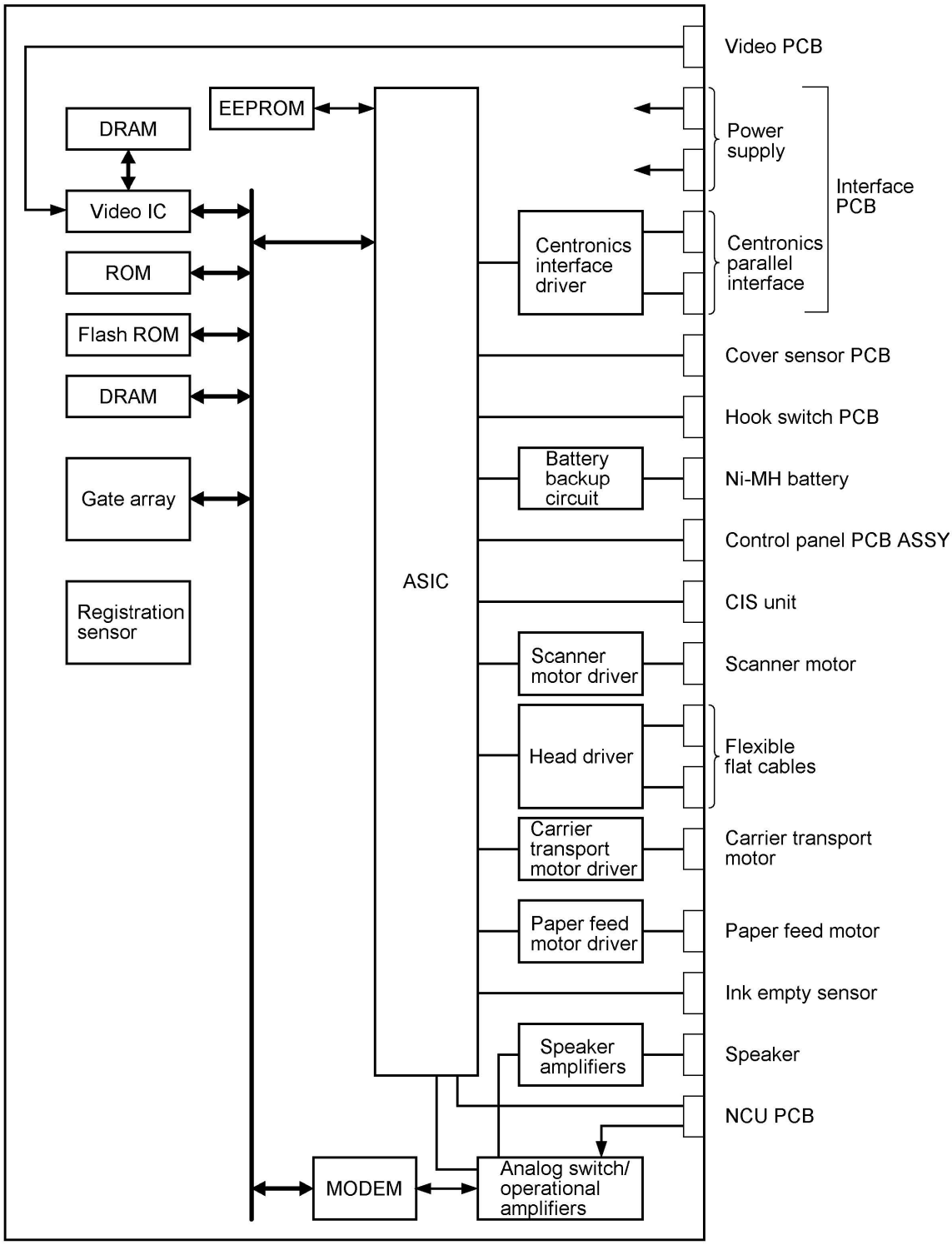

Block Diagram of Main PCB

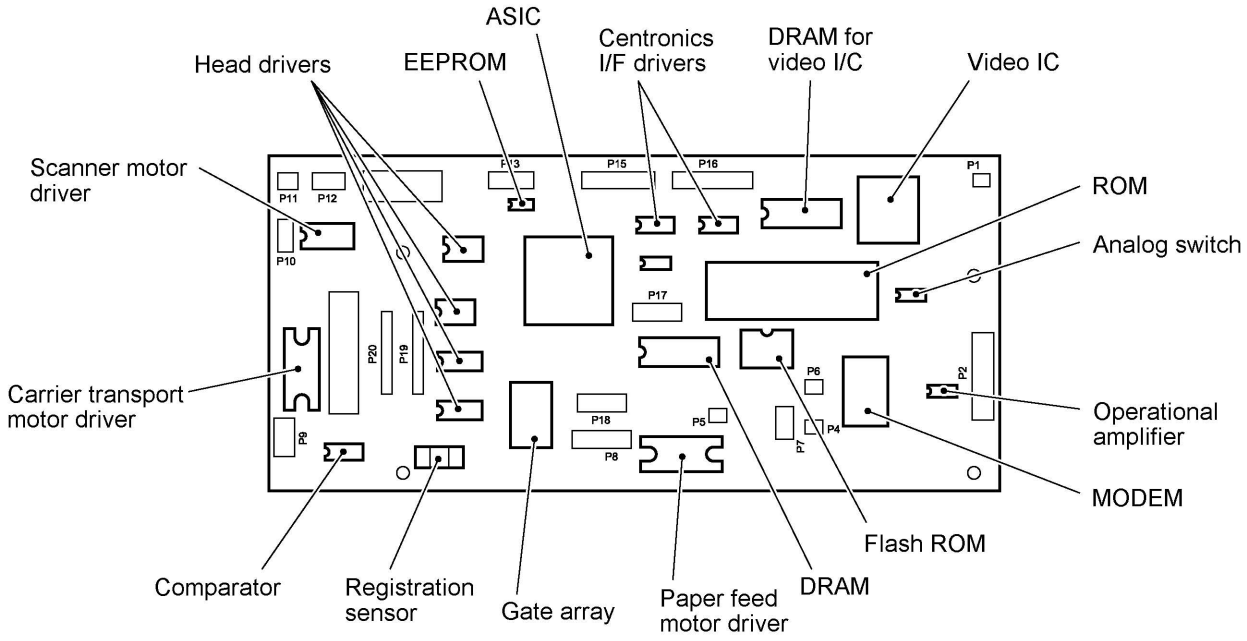
ASIC
Centronics I/F drivers
DRAM for video I/C
Head drivers
EEPROM
Video IC
Scanner motor driver
ROM
Analog switch
Carrier transport motor driver
Operational amplifier
MODEM
Flash ROM
DRAM
Comparator
Registration sensor
Gate array
Paper feed motor driver
P1
P2
P4
P5
P6
P7
P8
P9
P10
P11
P12
P13
P15
P16
P17
P18
P19
P20

3.3 NCU PCB

The NCU PCB switches the communications line to telephone or built-in MODEM, under the control of the main PCB.

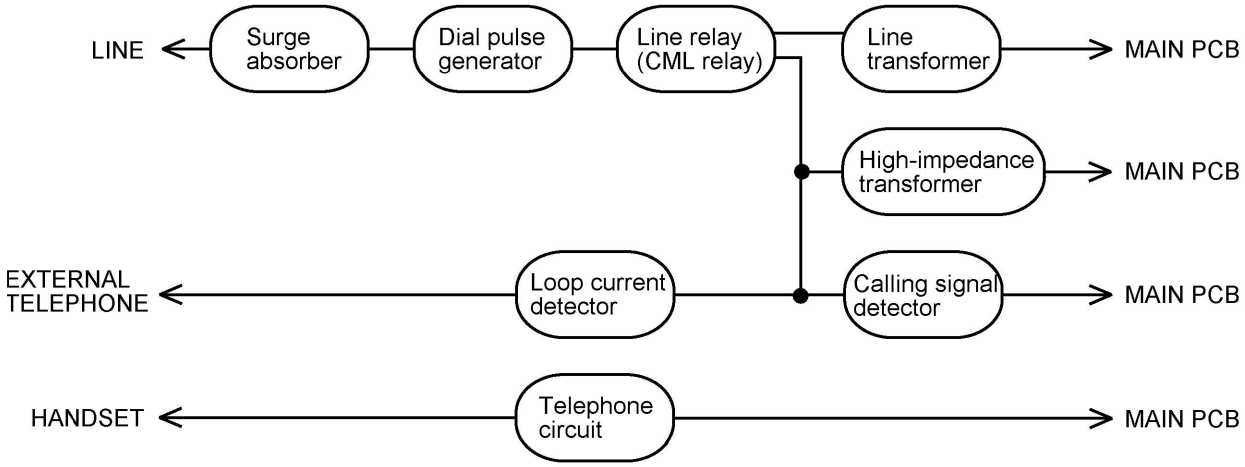

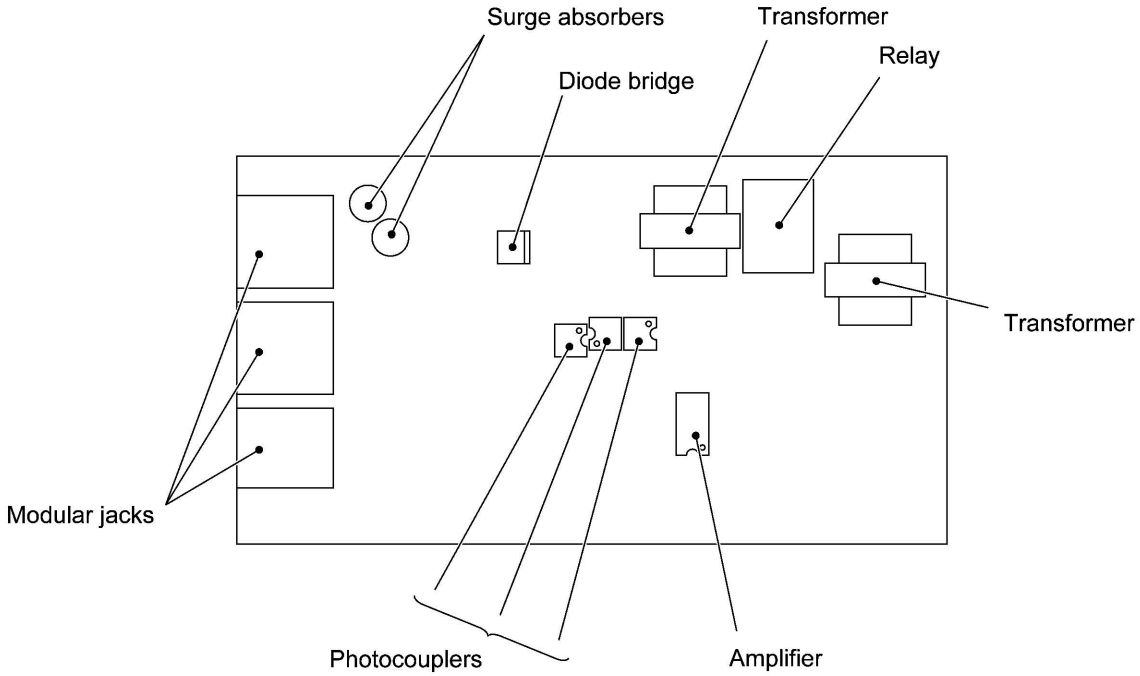

3.4 Control Panel PCB

The control panel PCB and the main PCB communicate with each other by serially transmitting commands and data.

The control panel unit consists of a gate array, an LCD and LEDs, which are controlled by the gate array according to commands issued from the control CPU on the main PCB.

The calendar clock is backed up by the backup circuit on the main PCB.

The panel FPC is a flexible keyboard PCB which integrates the key matrix having rubber keytops.

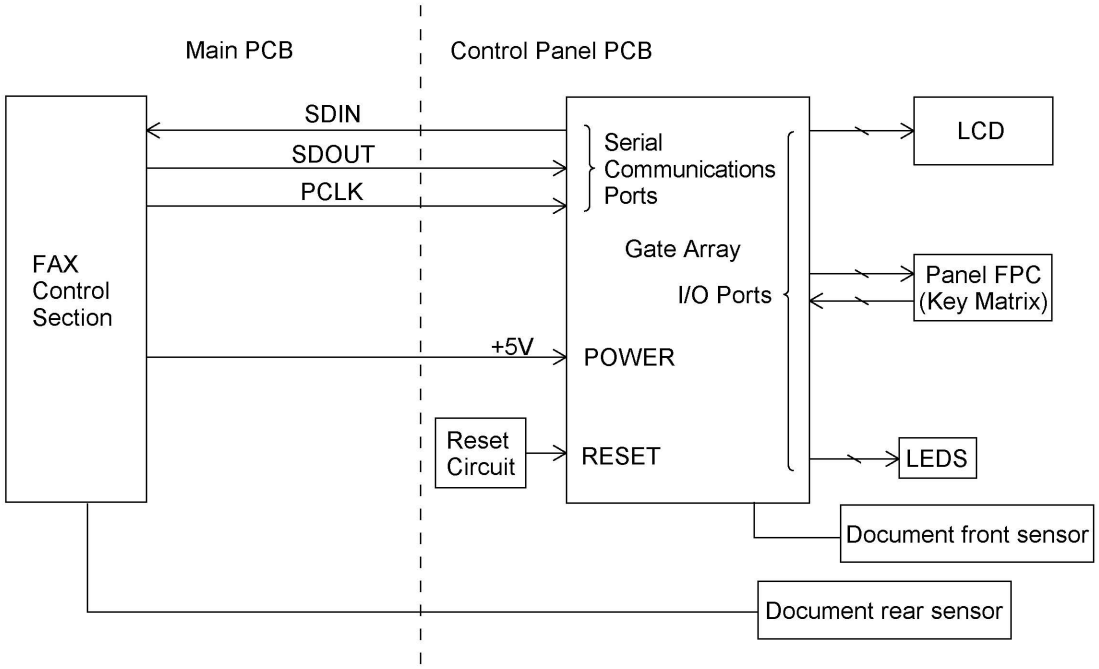

Control Panel PCB and its Related Circuit

3.5 Power Supply PCB

The power supply uses the switching regulator to generate DC power (+30V and +5V) from a commercial AC power line. Both the +30V and +5V DC supplies are fed via the interface PCB to the main PCB.

The +30V source is stabilized and fed to the scanner motor (for advancing documents), paper feed motor (for feeding documents and recording paper), carrier transport motor (for moving the carrier), thermal ink-jet print heads, and LED array of the CIS unit.

The +5V source is stabilized and fed to the ASIC, Centronics interface circuit, memories, and video IC.

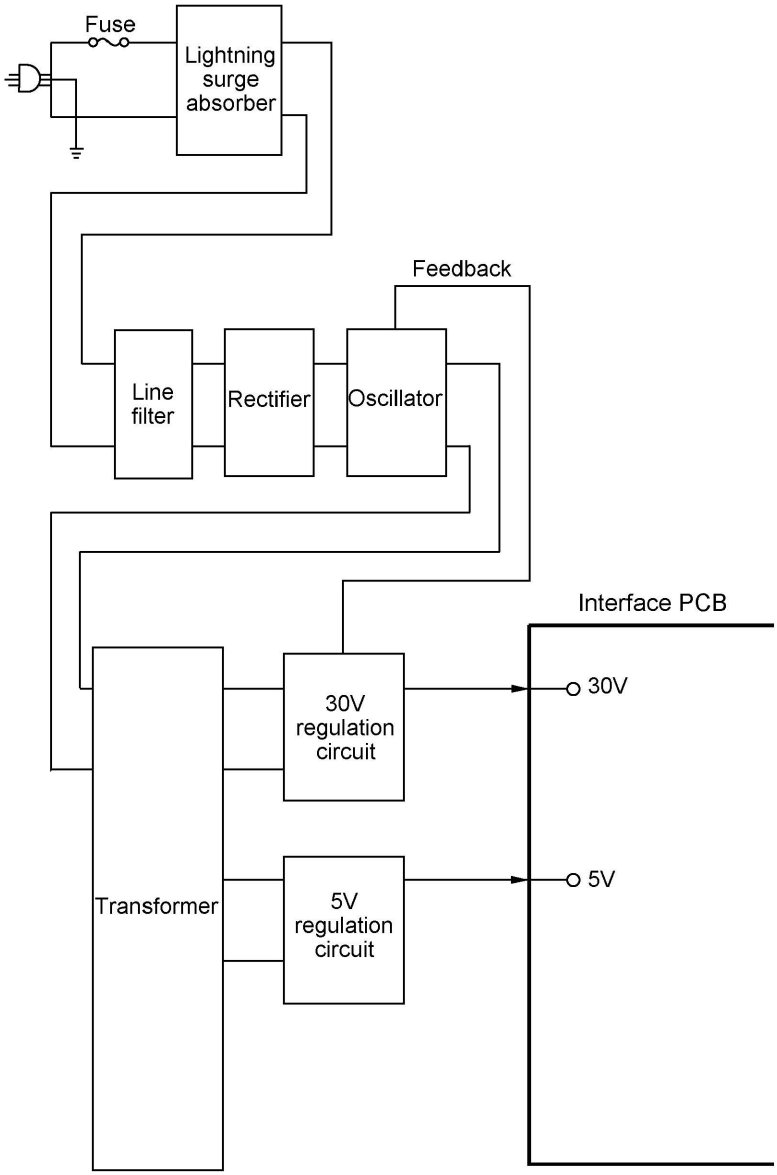

Power Supply Circuit

3.6 Interface PCB

This PCB interfaces the main PCB and the externally connected computer with each other.

The interface PCB also generates +22V and +11.75V supplies from the +30V source and +3.3V supply from the +5V source, and then feeds them to the main PCB.

The +22V and +11.75V sources are stabilized and fed to the thermal ink-jet print heads embedded in the ink cartridges and the head driver IC on the main PCB.

The +3.3V source is stabilized and fed to the ASIC and MODEM on the main PCB.

As shown below, the +22V source may be turned on or off by control signals issued from the main PCB.

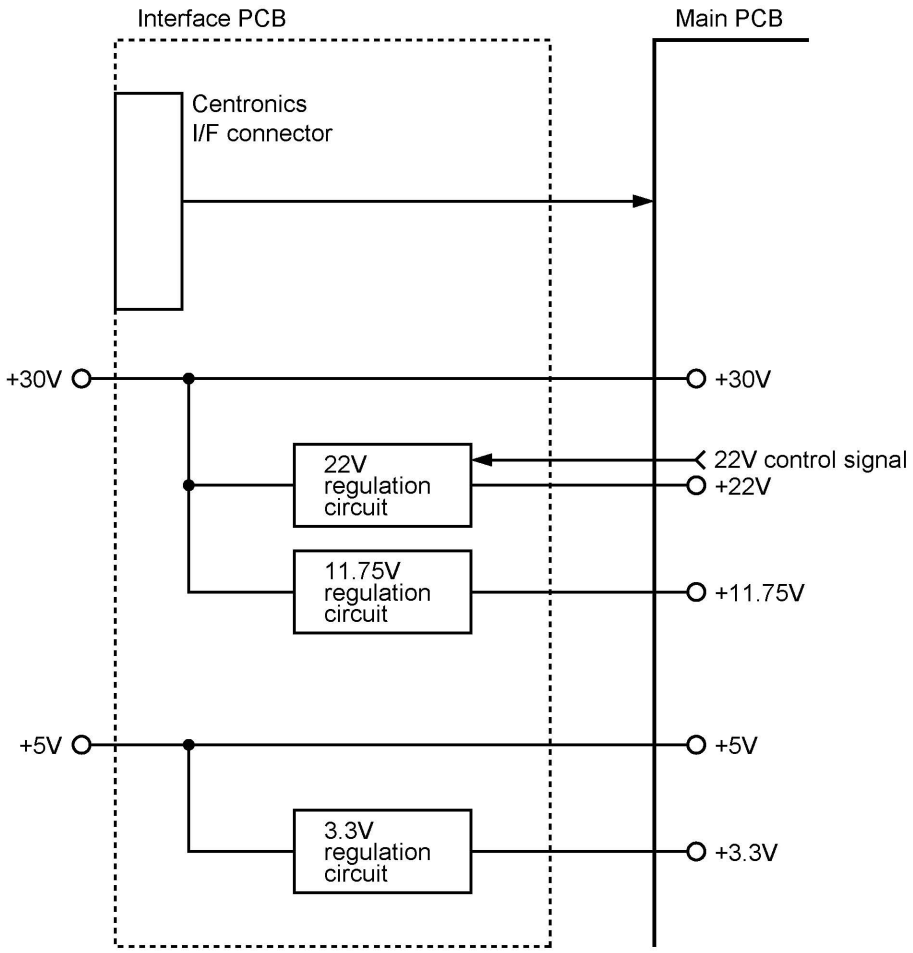

Interface Circuit

CONTENTS

1. DISASSEMBLY/REASSEMBLY IV-1

■ Safety Precautions IV-1

Tightening Torque List IV-2

■ Preparation IV-3

■ How to Access the Object Component IV-3

■ Disassembly Order Flow IV-4

1.1 Ink Cartridges IV-5

1.2 Interlock Keys IV-7

1.3 Control Panel ASSY IV-8

1.4 Panel Rear Cover and Control Panel IV-9

1.5 Document Feed Roller ASSY and Document Ejection Roller ASSY IV-12

1.6 Scanner Frame ASSY IV-13

1.7 Rear Cover IV-20

1.8 Auto Sheet Feeder (ASF) IV-21

1.9 Inner Cover IV-22

1.10 Battery ASSY IV-23

1.11 Upper Cover ASSY IV-24

1.12 Top Cover ASSY IV-26

1.13 Handset Mount and Hook Switch PCB ASSY IV-29

1.14 Top Cover Lock Spring IV-31

1.15 Speaker and Cover Sensor PCB IV-31

1.16 Main PCB and Insulation Film IV-32

1.17 Video PCB IV-35

1.18 Ink Empty Sensor PCB ASSY IV-36

1.19 Bottom Plate IV-38

1.20 Power Supply PCB and Interface PCB IV-39

1.21 NCU PCB IV-40

1.22 Frame Chassis ASSY IV-41

1.23 Paper Feed Motor IV-42

1.24 Carrier Transport Motor, Main Shaft, Timing Belt, and Carrier ASSY IV-43

1.25 Idle Pulley Holder IV-47

1.26 Maintenance ASSY IV-48

1.27 Pinch Roller ASSYs IV-49
1.28 Sensor Lever (Registration sensor actuator) IV-50
1.29 Earth Spring IV-51
1.30 Exit Roller and Base Frame IV-52
1.31 Large Feed Roller ASSY IV-54
1.32 Gear Plate ASSY IV-55
1.33 Ink Foam IV-56
1.34 Harness Routing IV-57

2. LUBRICATION IV-58
[1] Document feed roller ASSY and document ejection roller ASSY IV-58
[2] Control panel locks IV-59
[3] Scanner frame ASSY and separation roller gear IV-59
[4] Top cover lock spring IV-60
[5] Gear plate ASSY IV-60
[6] Hinges IV-61
[7] Frame chassis ASSY IV-61
[8] Idle pulley holder IV-62
[9] Maintenance ASSY IV-62
[10] Exit roller ASSY IV-63

1. DISASSEMBLY/REASSEMBLY

■ Safety Precautions

To prevent the creation of secondary problems by mishandling, observe the following precautions during maintenance work.

(1) Unplug the power cord from the power outlet before replacing parts or units. When having access to the power supply, be sure to unplug the power cord from the power outlet.

(2) Be careful not to lose screws, washers, or other parts removed for parts replacement.

(3) When using soldering irons and other heat-generating tools, take care not to damage the resin parts such as wires, PCBs, and covers.

(4) Before handling the PCBs, touch a metal portion of the equipment to discharge static electricity; otherwise, the electronic parts may be damaged due to the electricity charged in your body.

(5) When transporting PCBs, be sure to wrap them in conductive sheets such as aluminum foil.

(6) Be sure to reinsert self-tapping screws correctly, if removed.

(7) Tighten screws to the torque values listed on the following pages.

(8) When connecting or disconnecting cable connectors, hold the connector bodies not the cables. If the connector has a lock, always slide the connector lock to unlock it.

(9) Before reassembly, apply the specified lubricant to the specified points. (Refer to Section 2 in this chapter.)

(10) After repairs, check not only the repaired portion but also that the connectors and other related portions function properly before operation checks.

(11) If you have loaded ink cartridges for operation checks, be sure to remove them from the carrier before transporting the facsimile equipment. The equipment has no carrier locking mechanism.

Put the removed ink cartridges in a vinyl bag and seal it up in order to prevent their nozzles from drying up.

(12) After finishing repairs and before sending the equipment back to the customer, be sure to initialize the ink dot counters (refer to Chapter V, Section 3.7).

Tightening Torque List

Location	Screw type	Q'ty	Tightening torque N•cm (kg•cm)	Loosening torque N•cm (kg•cm)
ADF parts	Taptite, pan (washer) B M3x6	1	39 ±10 (4 ±1)	20 to 59 (2 to 6)
Panel rear cover	Taptite, cup B M3x8	2	59 ±20 (6 ±2)	Min. 20 (Min. 2)
Scanner frame ASSY	Taptite, cup B M3x10	2	88 ±20 (9 ±2)	Min. 20 (Min. 2)
Grounding terminals	Taptite, cup S M3x6	2	69 ±20 (7 ±2)	Min. 20 (Min. 2)
Scanner motor	Screw, pan (washer) M3x6DA	1	69 ±20 (7 ±2)	Min. 20 (Min. 2)
Control panel locks	Taptite, cup B M3x8	2	78 ±20 (8 ±2)	Min. 20 (Min. 2)
Pinch roller leaf spring	Taptite, cup B M3x8	1	78 ±20 (8 ±2)	Min. 20 (Min. 2)
Scanner drive unit	Taptite, cup B M3x10	1	78 ±20 (8 ±2)	Min. 20 (Min. 2)
	Taptite, cup B M3x8	1	78 ±20 (8 ±2)	Min. 20 (Min. 2)
Rear cover	Taptite, bind B M4x12	4	98 ±20 (10 ±2)	Min. 20 (Min. 2)
Auto sheet feeder (ASF)	Taptite, cup S M3x6	2	78 ±20 (8 ±2)	Min. 20 (Min. 2)
	Taptite, cup B M3x10	1	78 ±20 (8 ±2)	Min. 20 (Min. 2)
Inner cover	Taptite, bind B M4x12	3	98 ±20 (10 ±2)	Min. 20 (Min. 2)
Upper cover ASSY	Taptite, cup S M3x6	2	78 ±20 (8 ±2)	Min. 29 (Min. 3)
	Taptite, bind B M4x12	2	98 ±20 (10 ±2)	Min. 29 (Min. 3)
Grounding wires	Taptite, cup S M3x6	1	78 ±20 (8 ±2)	Min. 20 (Min. 2)
Top cover	Taptite, bind B M4x12	2	98 ±20 (10 ±2)	Min. 29 (Min. 3)
Hinges	Taptite, bind B M4x12	4	98 ±20 (10 ±2)	Min. 29 (Min. 3)
Handset mount	Taptite, cup B M3x10	2	78 ±20 (8 ±2)	Min. 20 (Min. 2)
Top cover lock spring	Taptite, bind B M4x12	1	98 ±20 (10 ±2)	Min. 29 (Min. 3)
Speaker spring	Taptite, bind B M4x12	1	98 ±20 (10 ±2)	Min. 29 (Min. 3)
Main PCB	Taptite, cup S M3x6	4	78 ±20 (8 ±2)	Min. 20 (Min. 2)
Video PCB	Taptite, cup B M3x10	1	78 ±20 (8 ±2)	Min. 20 (Min. 2)
Bottom plate	Taptite, cup S M3x6	2	78 ±20 (8 ±2)	20 to 59 (2 to 6)
	Taptite, bind B M4x12	6	98 ±20 (10 ±2)	Min. 29 (Min. 3)
Power supply PCB	Taptite, cup S M3x6	2	49 ±20 (5 ±2)	Min. 20 (Min. 2)
Grounding wire for AC cord	Screw, pan (washer) M4x6DB	1	49 ±20 (5 ±2)	Min. 20 (Min. 2)
I/F connector on interface PCB	Screw, pan M3x6	2	78 ±20 (8 ±2)	Min. 20 (Min. 2)
Frame grounding wire	Taptite, cup S M3x6	1	49 ±20 (5 ±2)	Min. 20 (Min. 2)
NCU PCB	Taptite, bind B M4x12	1	98 ±20 (10 ±2)	Min. 29 (Min. 3)
Frame chassis ASSY	Taptite, bind B M3x10	2	78 ±20 (8 ±2)	Min. 20 (Min. 2)
	Taptite, bind B M4x12	4	98 ±20 (10 ±2)	Min. 29 (Min. 3)
Paper Feed motor	Taptite, bind S M3x5	2	78 ±20 (8 ±2)	Min. 20 (Min. 2)
Carrier transport motor	Taptite, bind S M3x5	2	78 ±20 (8 ±2)	Min. 20 (Min. 2)
Base frame	Taptite, bind P M3x8	2	78 ±20 (8 ±2)	Min. 20 (Min. 2)
Gear plate ASSY	Taptite, bind S M3x5	2	78 ±20 (8 ±2)	Min. 20 (Min. 2)

■ Preparation

Prior to proceeding to the disassembly procedure,

(1) Unplug

- the modular jack of the telephone line,
- the modular jack of the curled cord (and remove the handset),
- the PC interface cable, and
- the modular jack of an external telephone set if connected. (Not shown below.)

(2) Remove

- the document wire extension
- the document tray,
- the paper tray, and
- the ink cartridges if loaded. (Not shown below.)

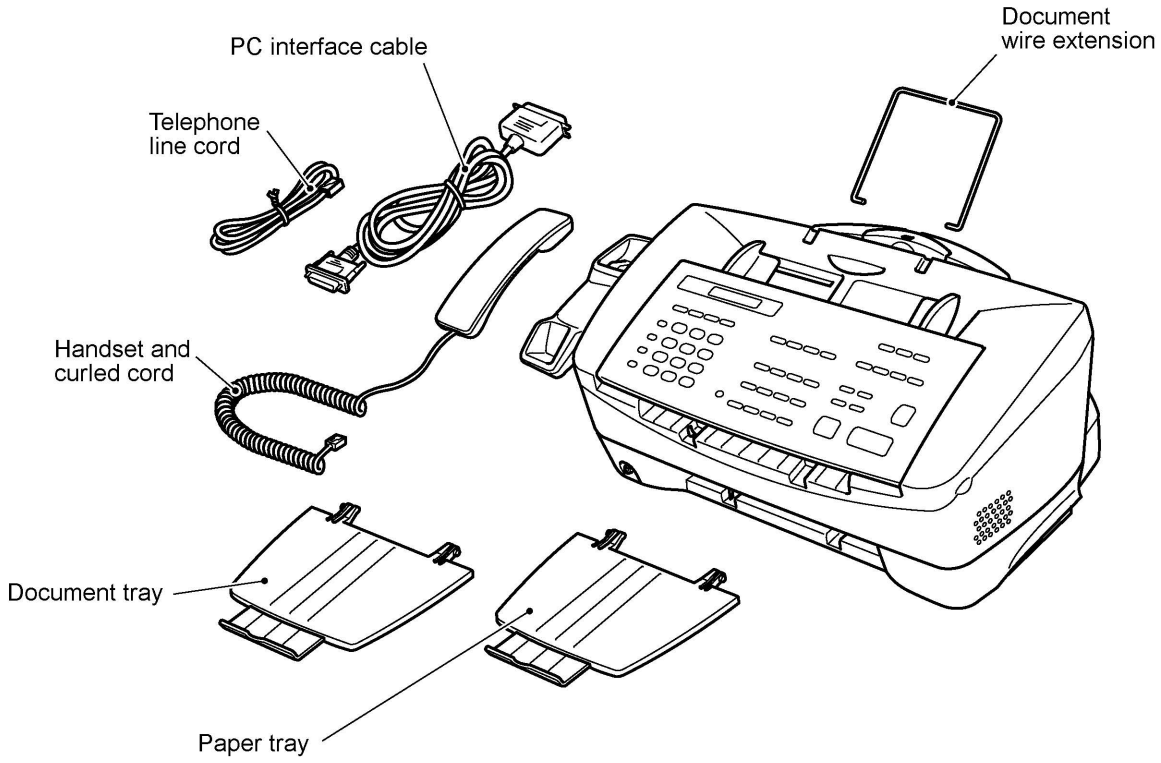

■ How to Access the Object Component

- On the next page is a disassembly order flow which helps you access the object components. To remove the paper feed motor, for example, first find it on the flow and learn its number (㉓ in this case). You need to remove parts numbered ③, ⑥, ⑦, ⑧, ⑨, ⑩, ⑪, ⑯, ⑰, ⑱, and ㉒ so as to access the paper feed motor.
- Unless otherwise specified, the disassembled parts or components should be reassembled in the reverse order of removal.

■ Disassembly Order Flow

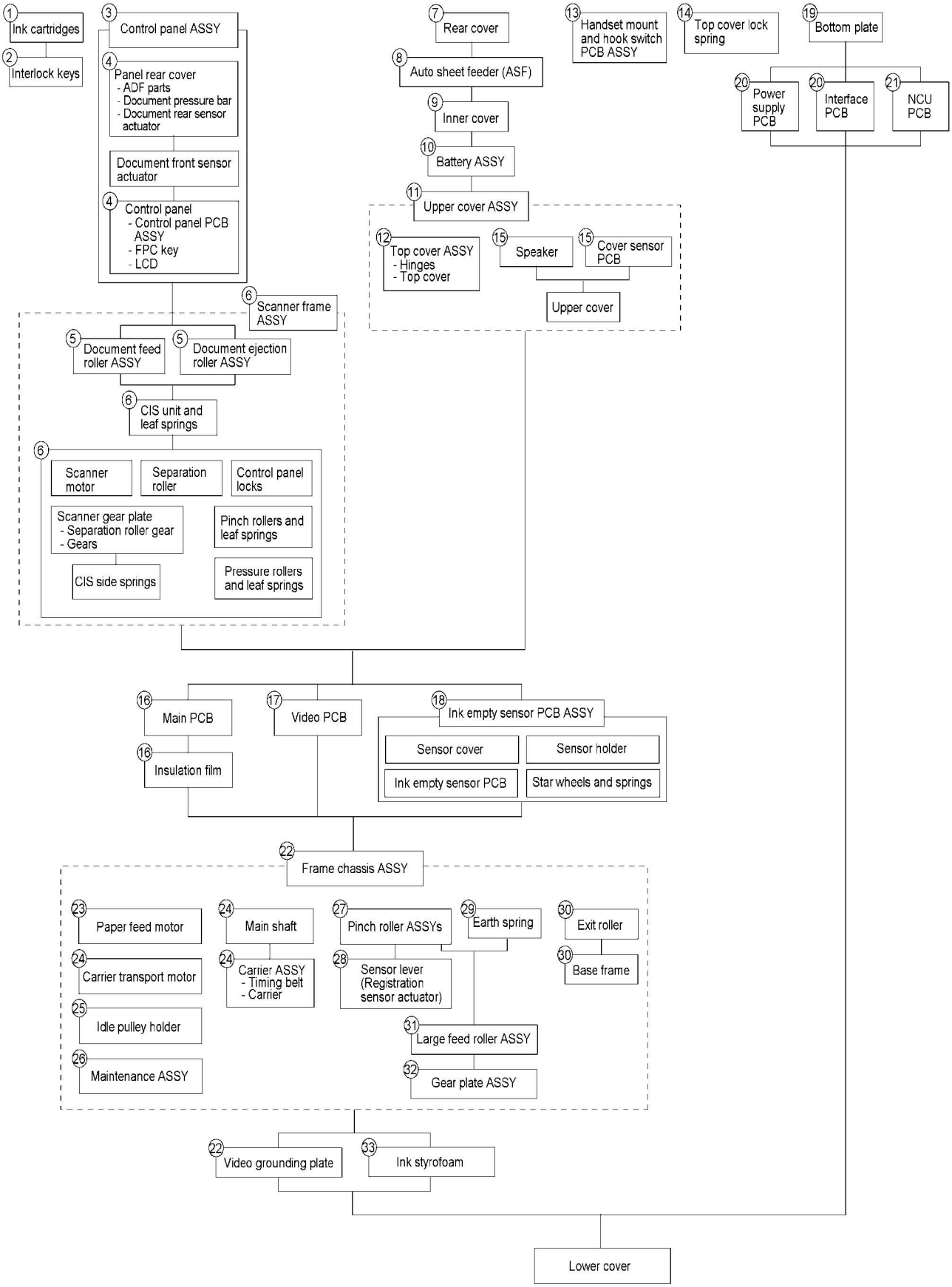

1.1 Ink Cartridges

During disassembly jobs, both of the ink cartridges should be removed. The following procedure should apply only when you need to make operation checks.

If you have initialized the EEPROM, plugging the power cord into an electrical socket will show the "SET CARTRIDGES" and "PLS OPEN COVER" alternately on the LCD. Then follow the steps given below.

If ink empty LED blinks or comes ON during printing, press the Ink Management key, choose "3.REPLACE INK" by using the right or left arrow key, and press the Set key. The "PLS OPEN COVER" appears on the LCD. Then follow the steps given below.

(1) Open the top cover.

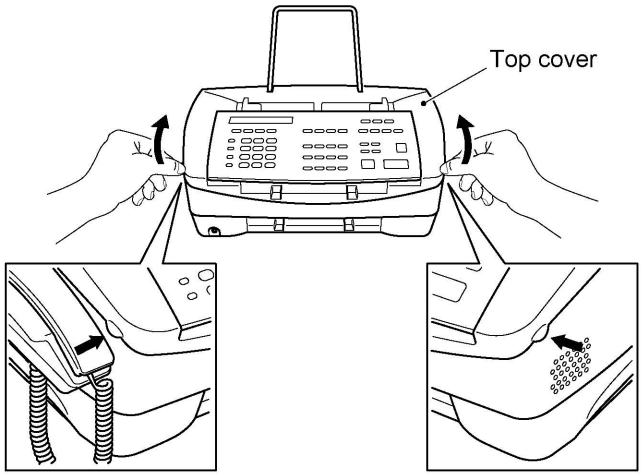

A few seconds later, the carrier will move to the loading position.

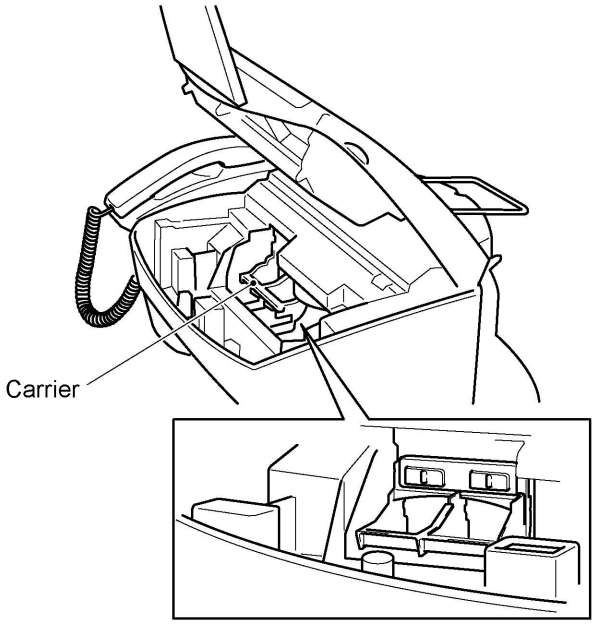

(2) If no ink cartridge has been loaded, load a black ink cartridge and color ink cartridge into the slots and press them to the rear until they snap into place.

NOTE: Black ink cartridges should be loaded in the right slot, and color ink cartridges should be in the left slot. Match the ID color indicators on the ink cartridges and interlock keys (shown in Section 1.2).

If ink cartridges have been loaded, pull the empty cartridge(s) to the front and lift it up. Then load a new ink cartridge into the slot and press it to the rear until it snaps into place.

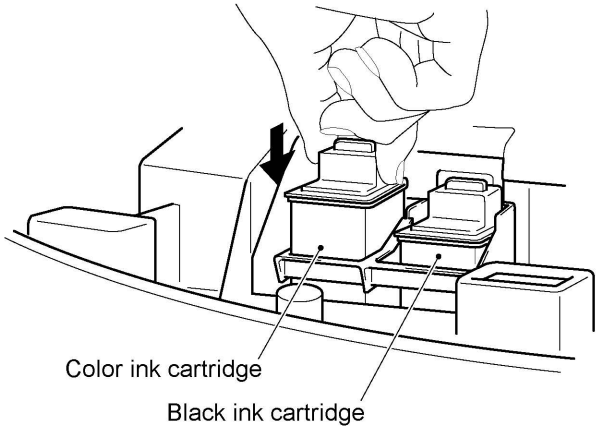

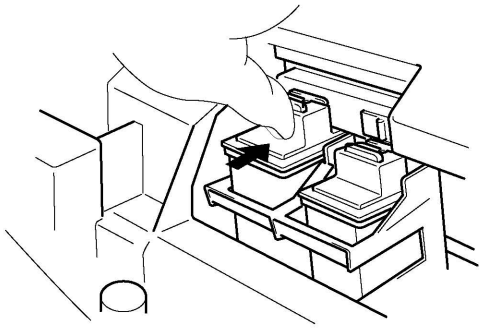

(3) After loading ink cartridges, close the top cover.

The "DID YOU CHANGE?" and "RIGHT:1.YES 2.NO" messages appear alternately.

(4) Press the **1** key.

The "DID YOU INSTALL?" and "1.BLACK 2.PHOTO" messages appear alternately.

(5) Press the **1** key.

The "DID YOU INSTALL?" and "BLACK:1.NEW 2.OLD" messages appear alternately, asking you whether the ink dot counter should be reset to zero.

(6) Press the **1** key.

The "DID YOU CHANGE?" and "LEFT:1.YES 2.NO" messages appear alternately.

(7) Press the **1** key.

The "DID YOU INSTALL?" and "COLOR 1.NEW 2.OLD" messages appear alternately, asking you whether the ink dot counter should be reset to zero.

(8) Press the **1** key.

The "ALIGNMENT" appears and then the "LOAD PAPER AND" and "PRESS START KEY" messages appear alternately.

(9) Check that paper is loaded in the auto sheet feeder (ASF), then press the **Start** key.

The equipment prints "Alignment check pattern sheet." If needed, adjust the alignment of print lines.

(10) Proceed to other operation checks if necessary. If you have finished operation checks, go to the following steps.

(11) Press the **Ink Management** key to move the carrier to the loading position.

(12) Remove both of the ink cartridges.

(13) Initialize the ink dot counters (refer to Chapter V, Section 3.7).

1.2 Interlock Keys

(1) Remove the interlock keys from the carrier.

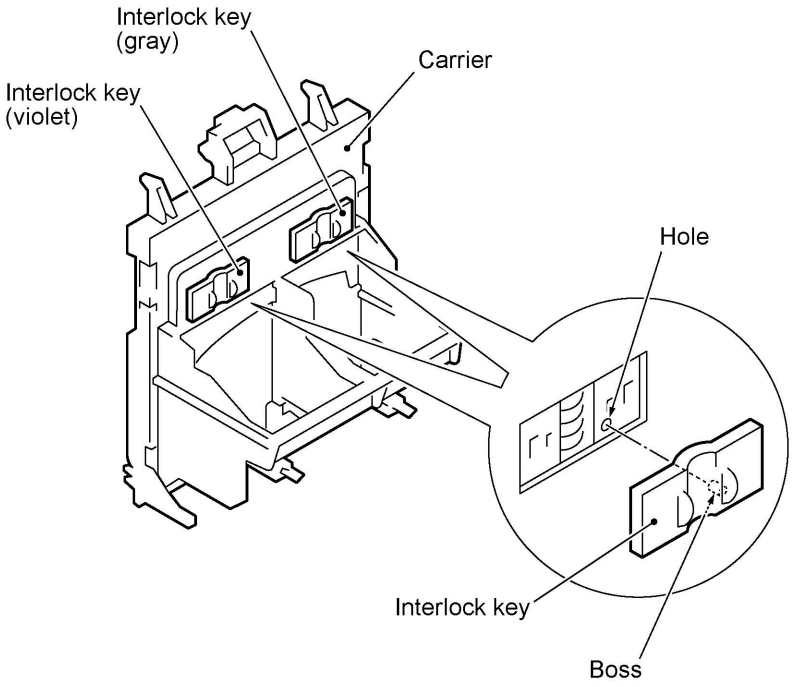

■ Reassembling Notes

- Set the *violet* interlock key *at the left* and the *gray* one *at the right*.
- As shown above, fit the boss of each interlock key in the hole provided on the carrier.

1.3 Control Panel ASSY

(1) Slightly open the control panel ASSY.

(2) Push the right and left arms of the control panel ASSY outwards (in the direction of arrow ①) with your thumbs and open the control panel ASSY further (arrow ②) to unhook those arms from bosses "x" provided on the scanner frame ASSY. Then slide the control panel ASSY to the front (arrow ③) to release its bosses "y" from the grooves of the scanner frame ASSY.

(3) Slightly lift up the control panel ASSY and disconnect the panel-main harness from the control panel PCB.

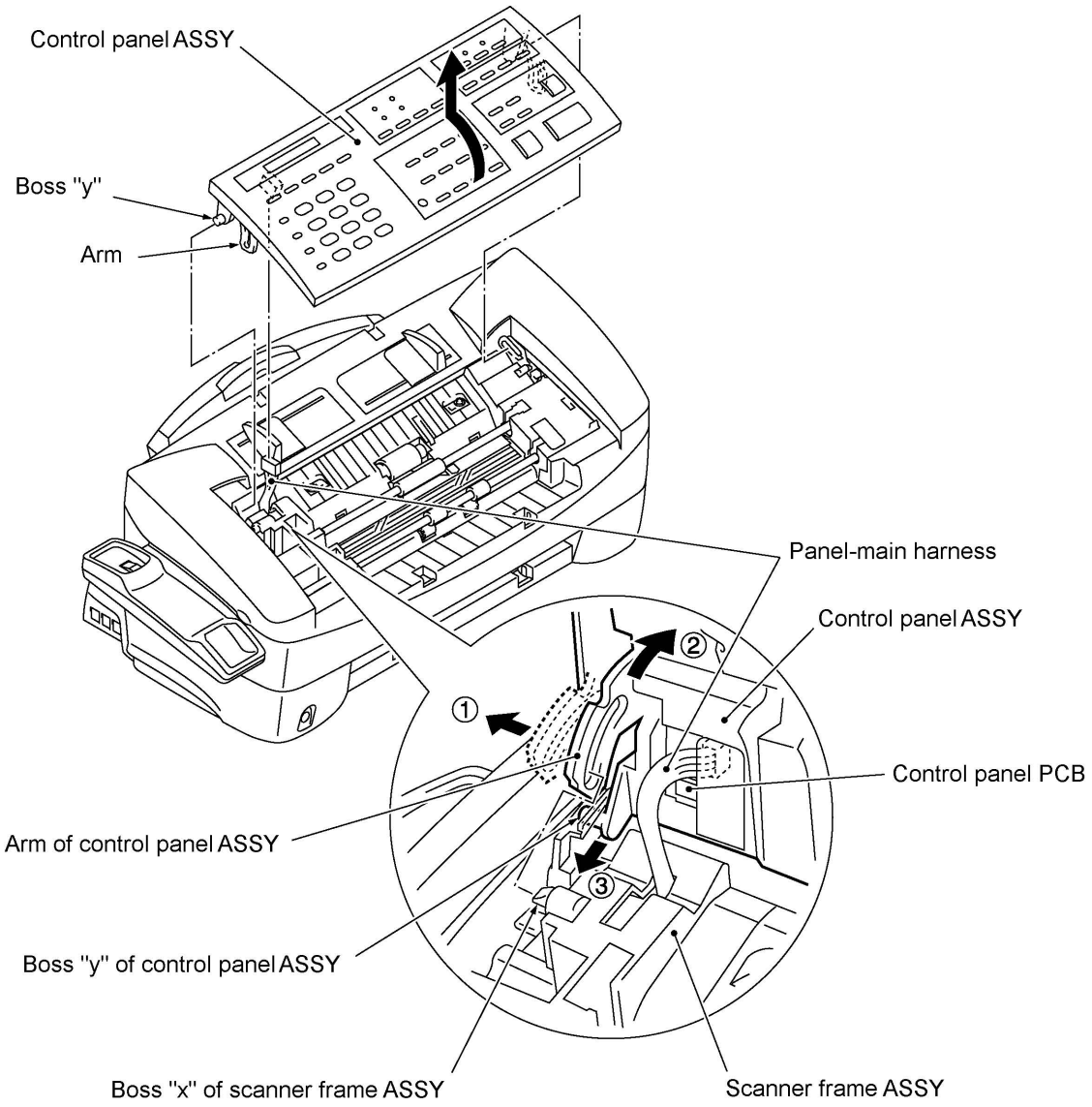

■ Reassembling Notes

- Make sure that the panel-main harness is not slack or pinched between the scanner frame and panel rear cover.

1.4 Panel Rear Cover and Control Panel

(1) Place the control panel ASSY upside down.

If you do not need to remove the ADF parts, antistatic brush, shield film, document pressure bar, or document rear sensor actuator, skip to step (6),

(2) To remove the ADF parts (spring plates, separation rubber and anti-vibration rubber), remove the screw.

(3) To replace the antistatic brushes and shield film, remove them.

NOTE: Once removed, they will become unusable and new parts will have to be put back in.

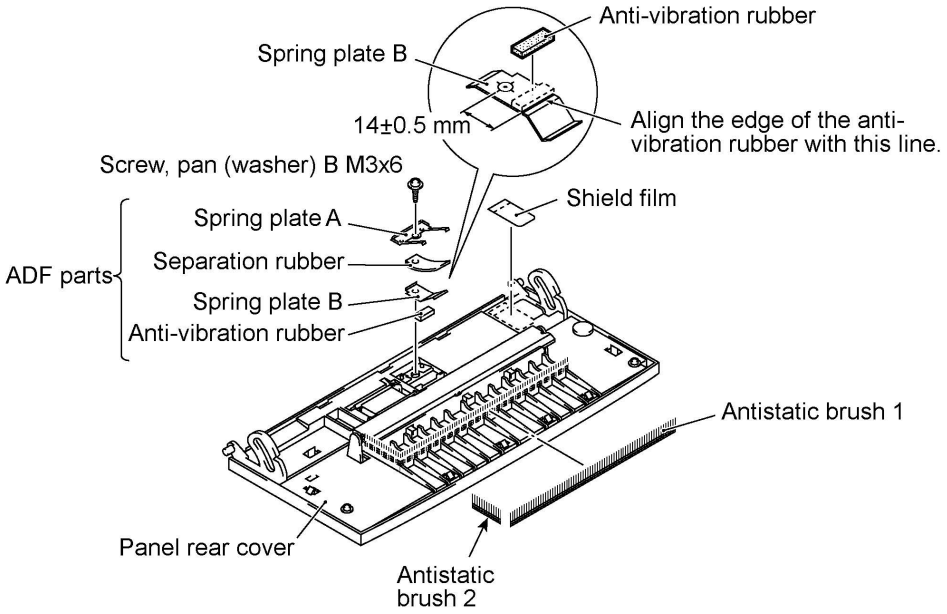

(4) To remove the document pressure bar, pull either of supports "a" provided on the panel rear cover outwards and then lift the pressure bar up and towards the rear to release the three tabs from the cutouts provided in the panel rear cover. The spring also comes off.

(5) To remove the document rear sensor actuator, pull either of supports "b" on the panel rear cover outwards.

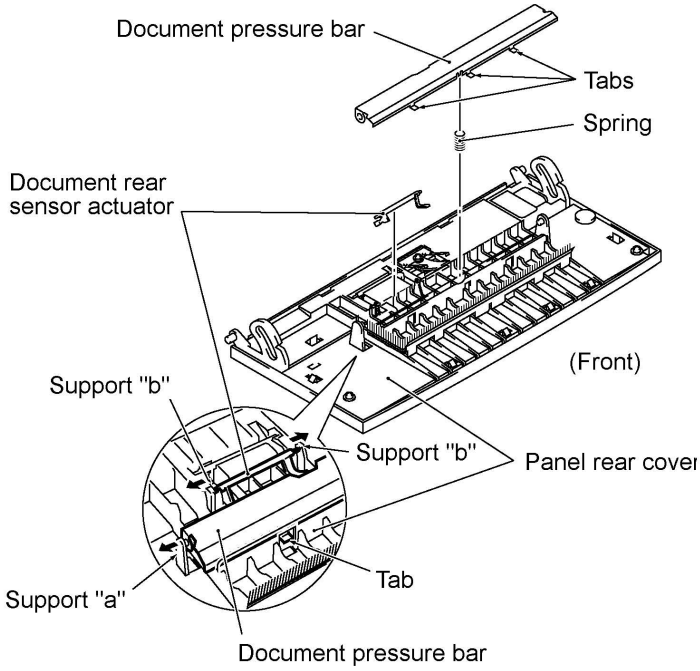

(6) Remove the two screws from the panel rear cover.

(7) Unhook the panel rear cover from eight "X" latches provided on the control panel and lift up the panel rear cover.

(8) Fully turn the document front sensor actuator to the rear and lift it up.

(9) Unhook the document sensor PCB from two "Y" latches.

(10) Unhook the control panel PCB from four "Z" latches.

(11) Slightly lift up the control panel PCB, then unlock the LCD cable connector and disconnect the LCD flat cable. Next, unlock the FPC key connector and disconnect the FPC key.

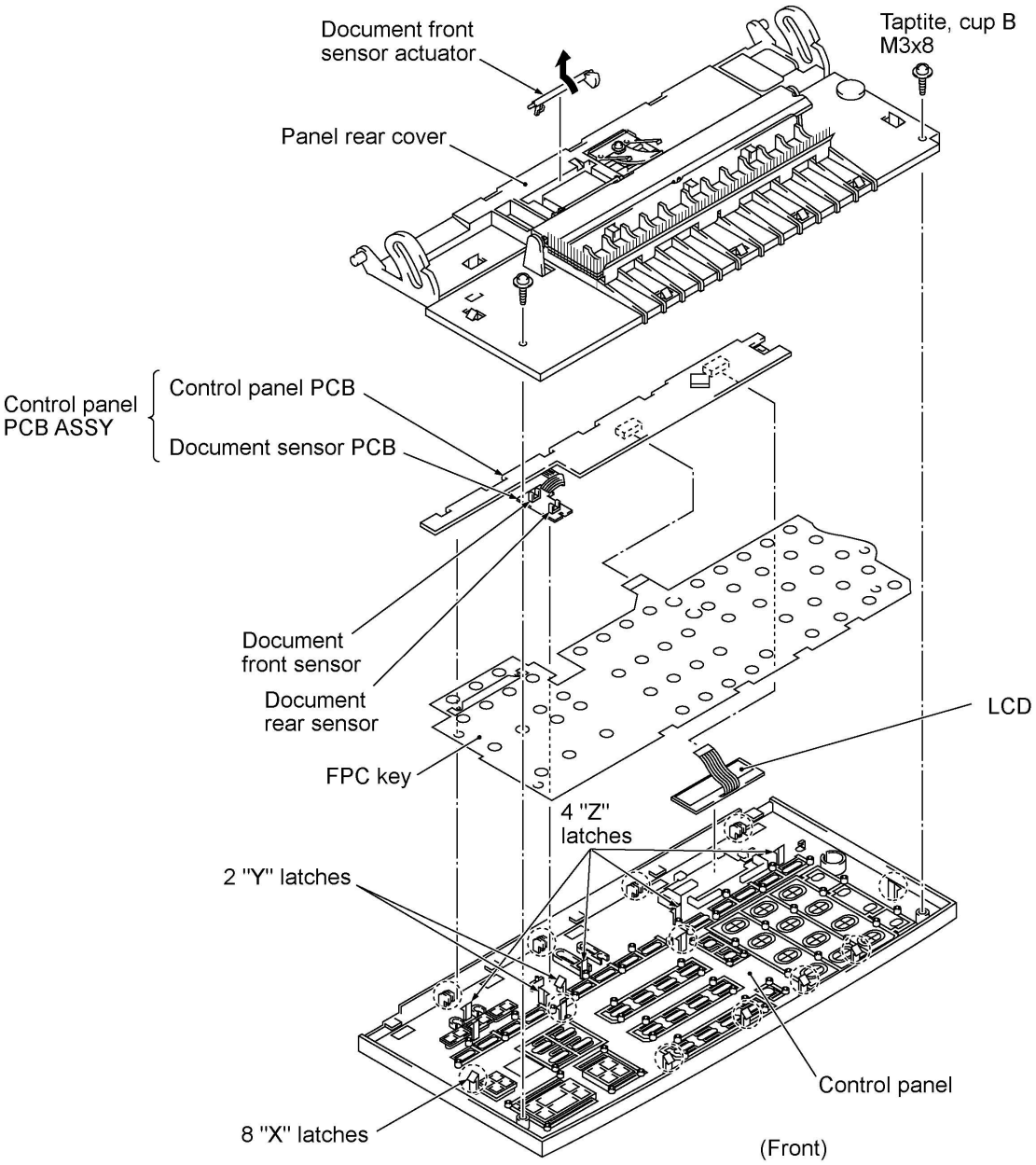

(12) As shown below, insert the tip of a flat screwdriver under clamp "A" from the rear and push up clamp "A" slightly to release the LCD, and then take out the LCD while pulling the LCD flat cable gently.

NOTE: Do not take out the LCD except when the LCD is defective and requires replacement.

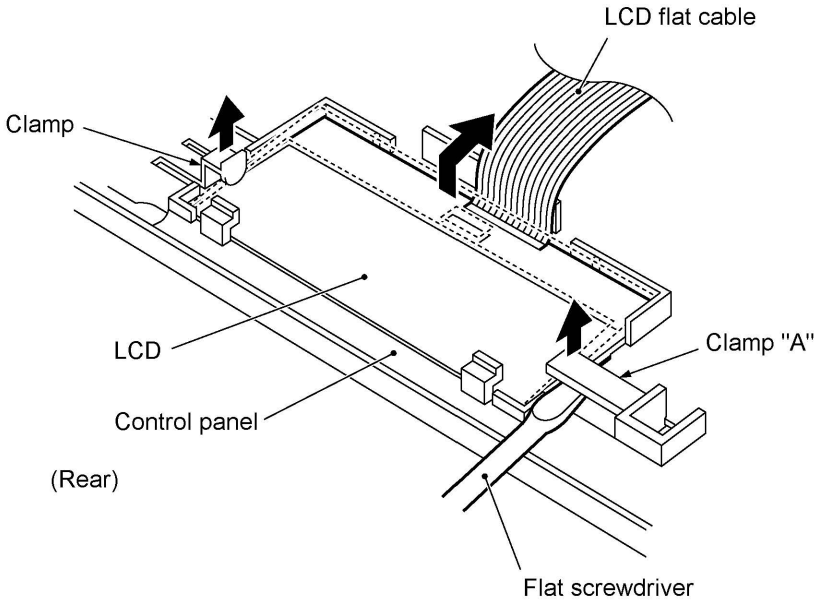

■ Reassembling Notes

- Before reinstalling the LCD to the control panel, wipe fingerprints or dust off the LCD surface and control panel window with a soft cloth.
- A new LCD is covered with a protection sheet. Before installing it, remove the protection sheet.
- To put the LCD back into place, insert the tip of a flat screwdriver under clamp "A" from the rear, push up clamp "A" slightly, and then push the LCD to the rear with your thumbs.

1.5 Document Feed Roller ASSY and Document Ejection Roller ASSY

(1) Lightly push down arm rib "a" and shift the document feed roller ASSY to the right and upwards.

(2) Lightly push down arm rib "b" and shift the document ejection roller ASSY to the right and upwards, without removing the shield film.

NOTE: Take care not to break the arm ribs. They may easily break.

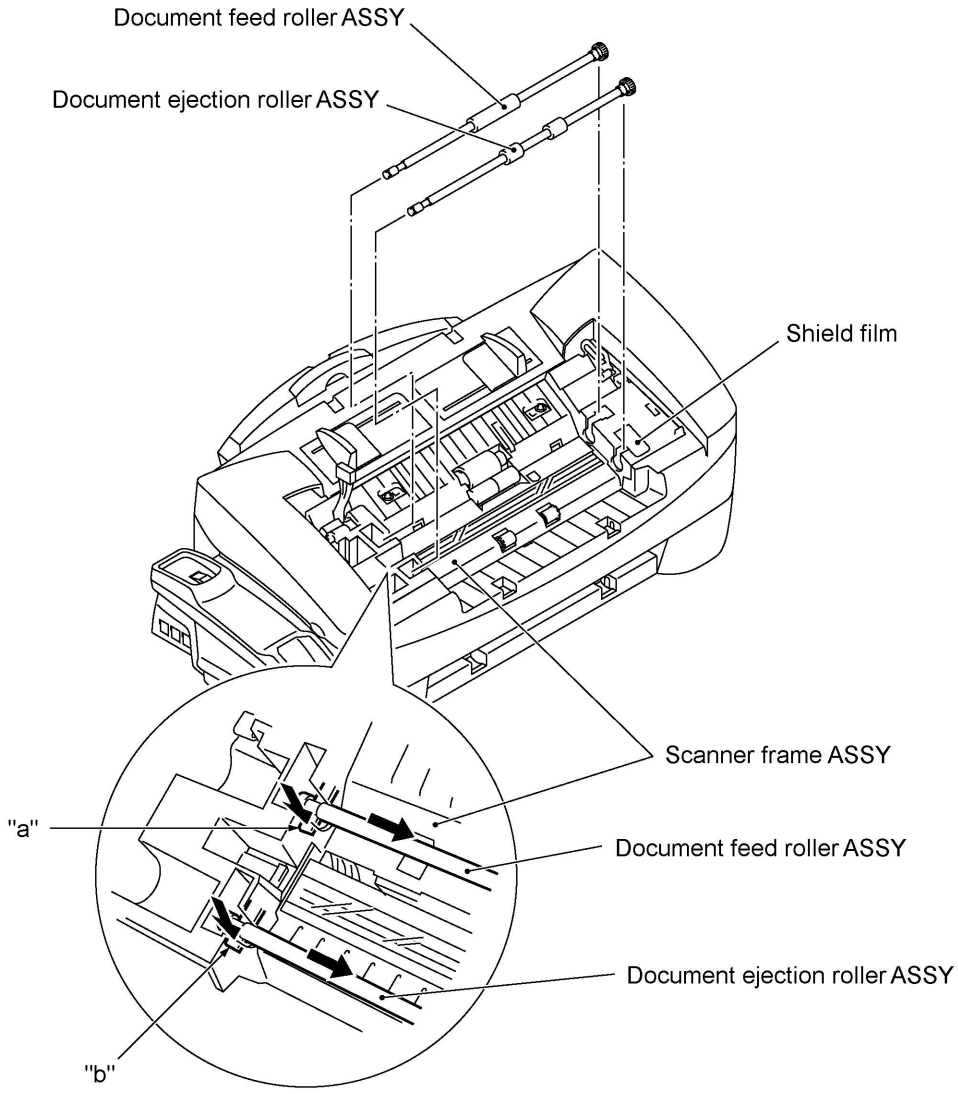

■ Reassembling Notes

- Make sure that the shield film is on the document ejection roller gear and not bent down by that gear.
- Once removed, the shield film will become unusable and new one will have to be put back in.

1.6 Scanner Frame ASSY

(1) You can remove the following parts from the top of the scanner frame ASSY without taking out the ASSY from the top cover.

- CIS film
- Shield film
- CIS unit (shown on the next page). Lightly pull up the arm, move the CIS unit to the left, and lift up the right edge of the CIS unit. While holding up the CIS unit, disconnect the CIS harness.
- CIS leaf springs (shown on the next page)

NOTE: Once removed, the CIS film and shield film will become unusable and new ones will have to be put back in.

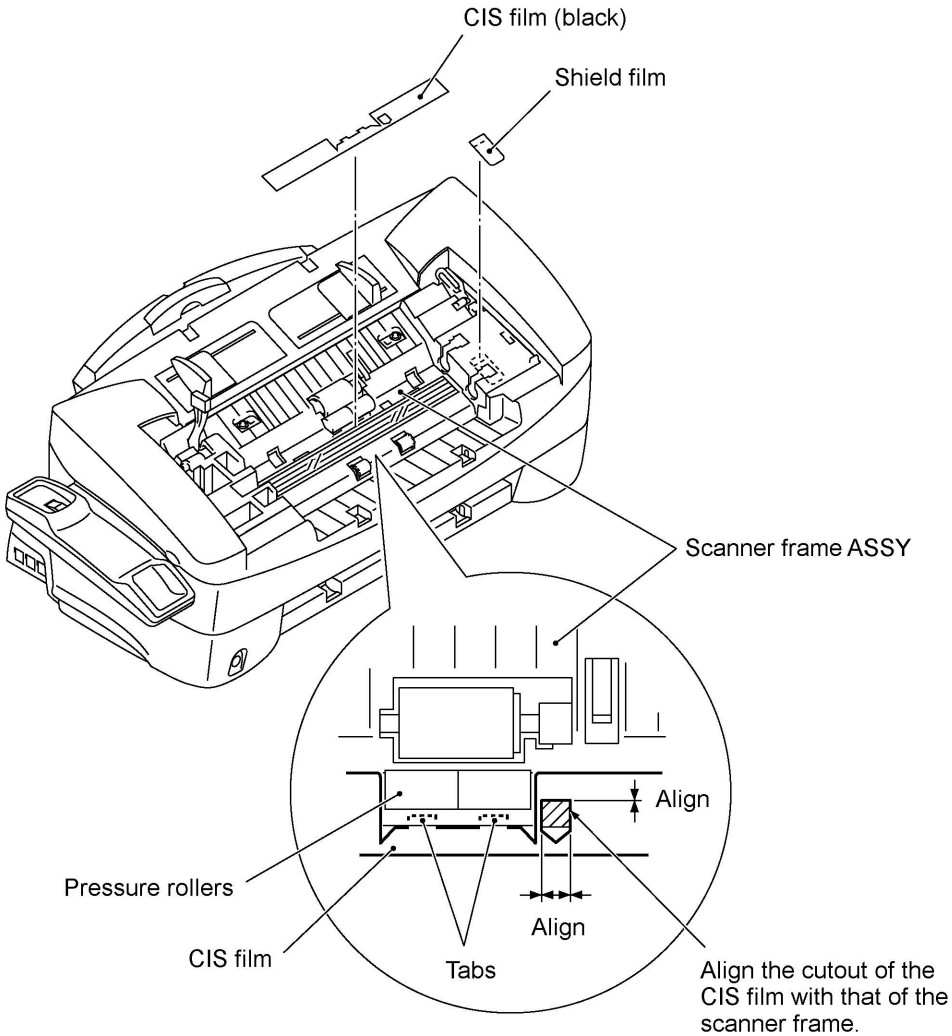

Attaching the CIS film

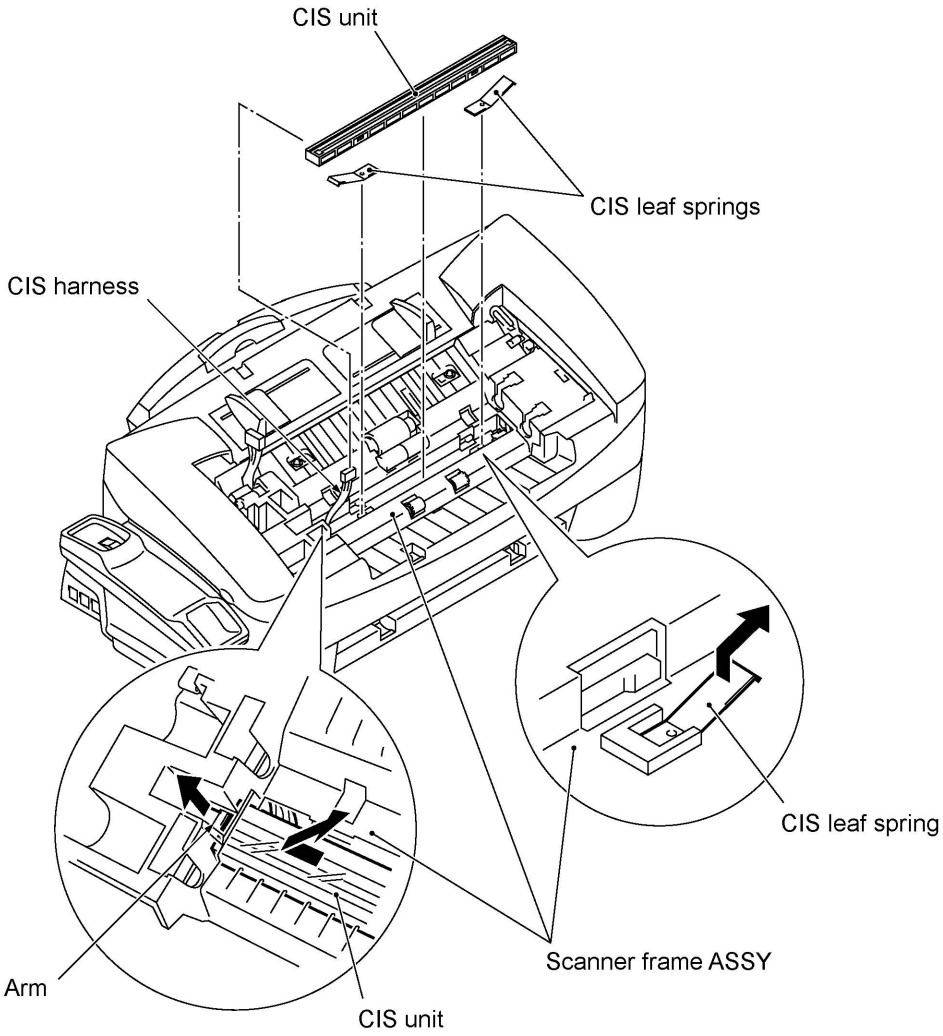

(2) Remove the two screws from the scanner frame ASSY. (See the illustration on the next page.)

(3) Lift up the rear edge of the scanner frame ASSY to release the three pawls provided on the front end from the top cover, then hold up the ASSY and disconnect the scanner motor harness and CIS harness (if the CIS is mounted).

(4) Take off the grounding terminals by removing the screws.

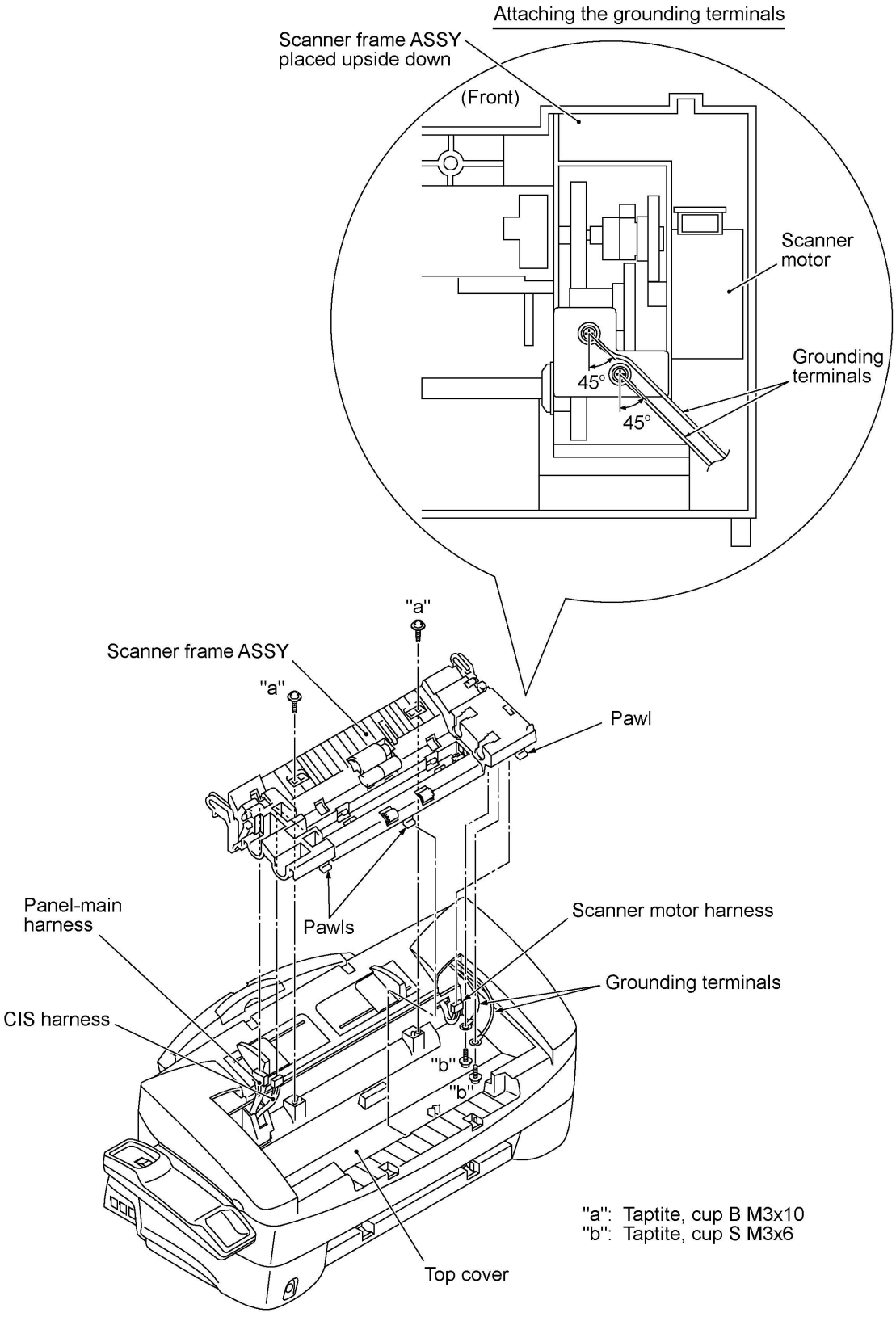

(5) Turn the scanner frame ASSY upside down.

(6) Remove the screw from the scanner motor and turn the motor clockwise to release from the latch.

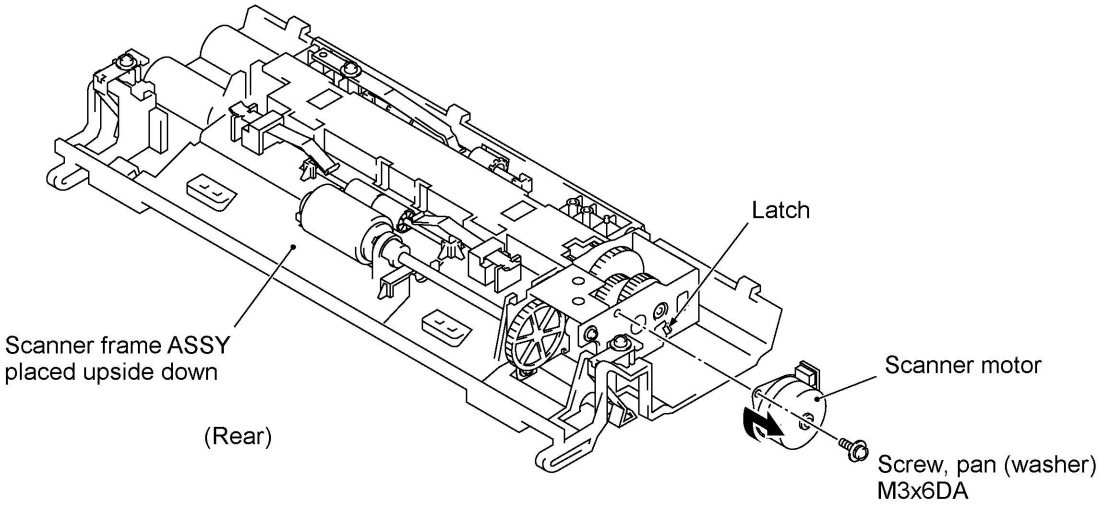

(7) Remove the pinch roller leaf spring by removing the screw, then lift up the pinch rollers and shaft.

(8) Remove the control panel locks (leaf springs) by removing the screws.

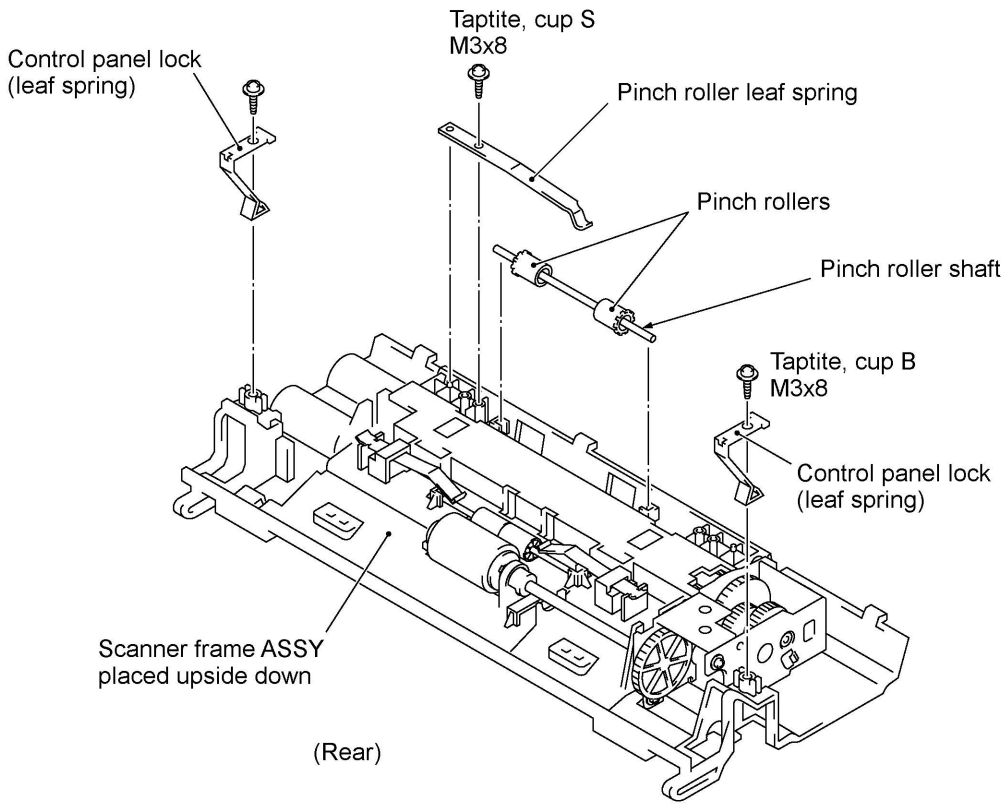

(9) Remove the pressure roller leaf springs by pulling them in the direction of arrows ① and ② in this order as shown below. Then remove the pressure rollers and shaft.

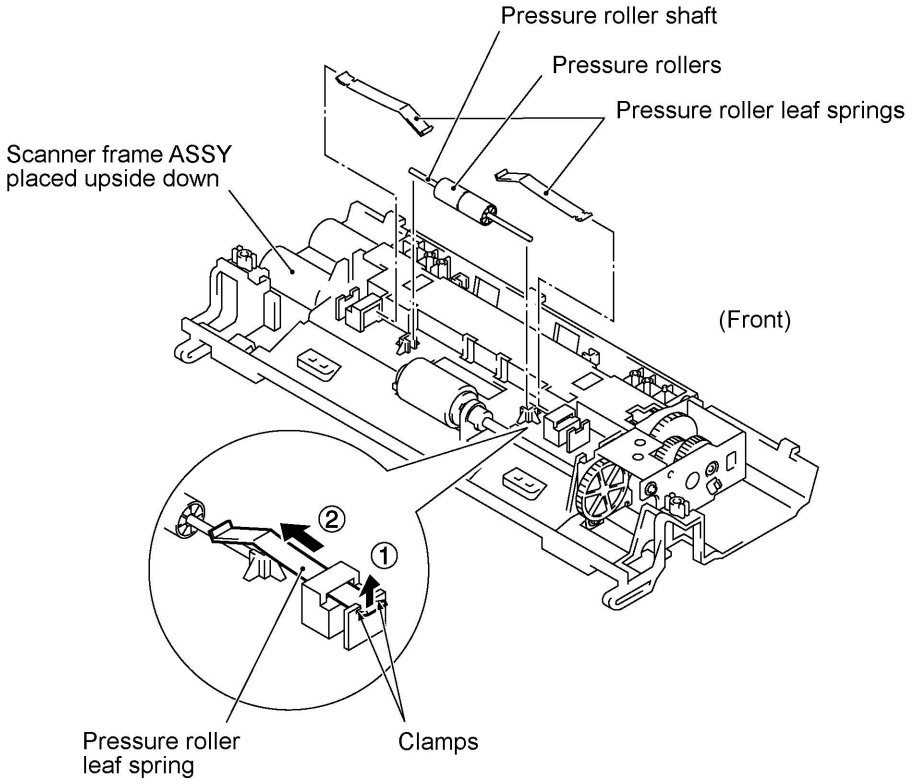

(10) Slightly push down the arm (in the direction of arrow ①) and shift the separation roller gear to the right (arrow ②) when viewed from the rear. Then shift the separation roller to the right (arrow ③) and take it up.

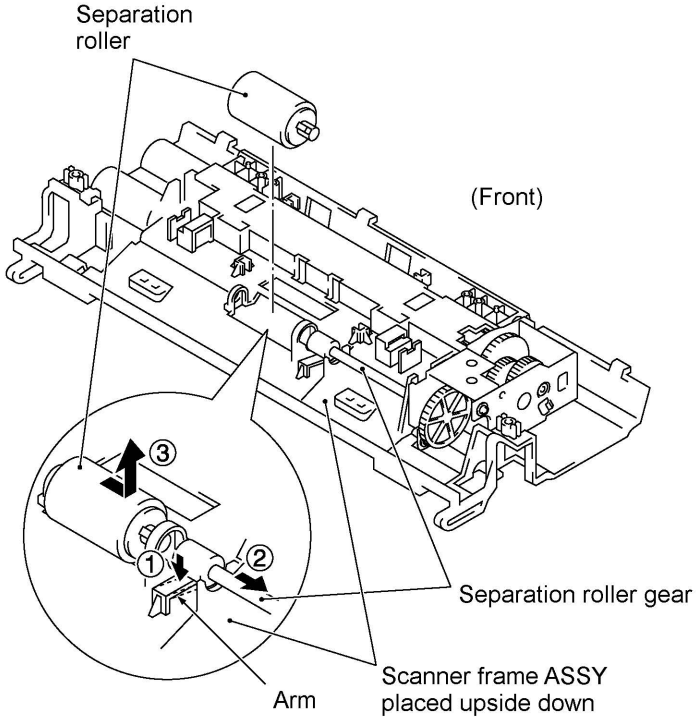

(11) Take off the scanner drive unit by removing the two screws. The separation roller gear also comes off.

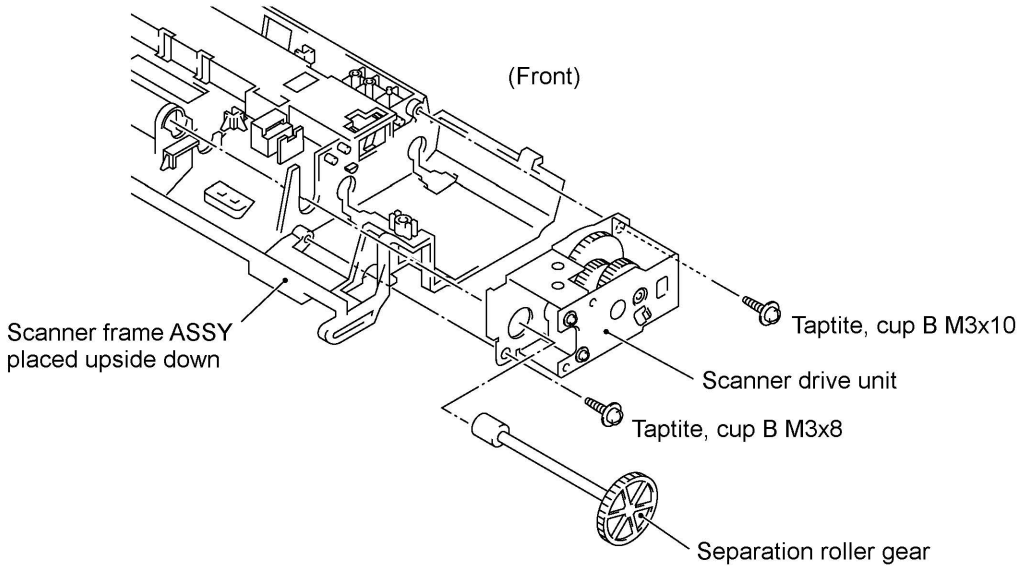

(12) Push down the CIS side spring to release it from the latch, then pull it out to the right (when viewed from the rear).

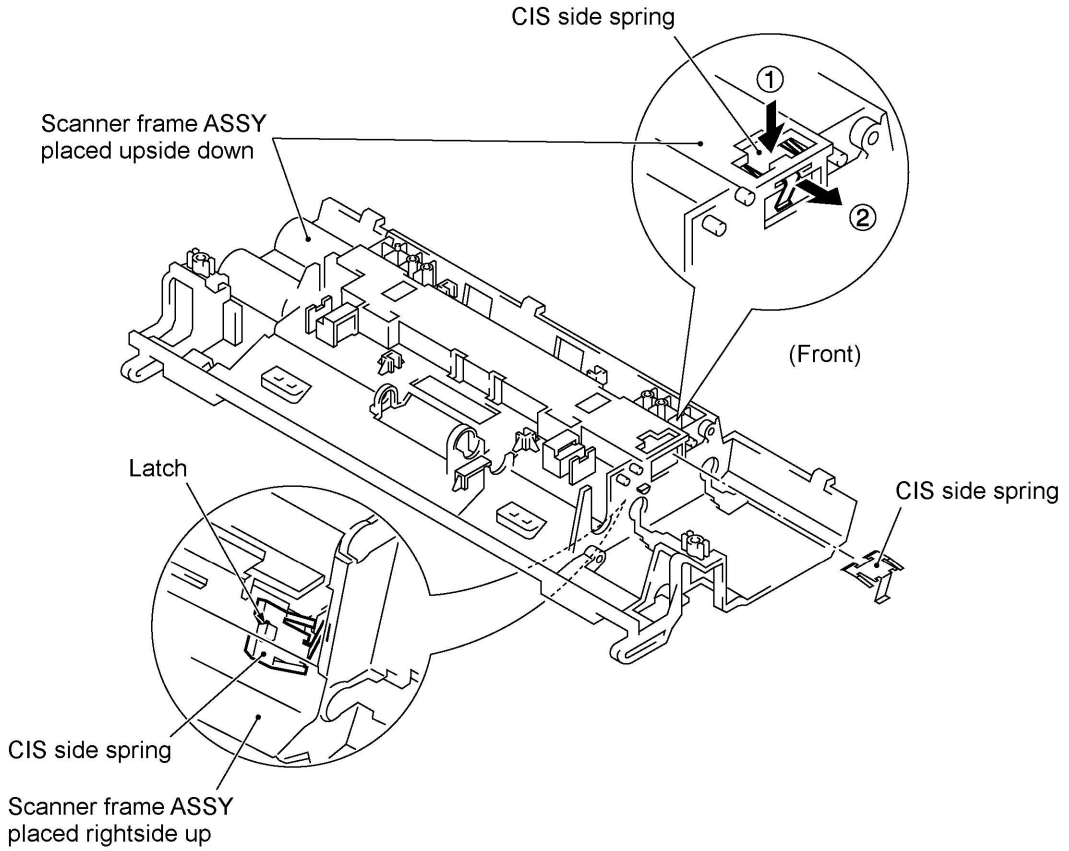

■ Reassembling Notes

- When reinstalling the scanner motor, fit it in the latch provided on the scanner frame with the connector facing up and then secure it with the screw. (See page IV-16.)
- When setting the scanner frame ASSY back into place,
  - secure the grounding terminals to the scanner frame ASSY with the screws at an angle shown on page IV-15.
  - route the CIS harness through the scanner frame ASSY (or connect the CIS harness to the CIS unit if mounted),
  - route the panel-main harness through the cutout provided in the scanner frame ASSY.
- When reinstalling the CIS unit, first connect the CIS harness, insert the left end under the arm of the scanner frame, put the CIS unit into the scanner frame, and move it to right (see the illustration given on page IV-14).
- When attaching the CIS film, align the right, left and rear edges of the cutout with those provided in the scanner frame and fit its two tabs into the scanner frame, as illustrated on page IV-13.
- Once removed, the shield film and CIS film become unusable and new parts will have to be put back in.

1.7 Rear Cover

(1) Remove the four screws from the rear cover.

(2) Slightly pull the top of the rear cover to the rear and lift up the rear cover.

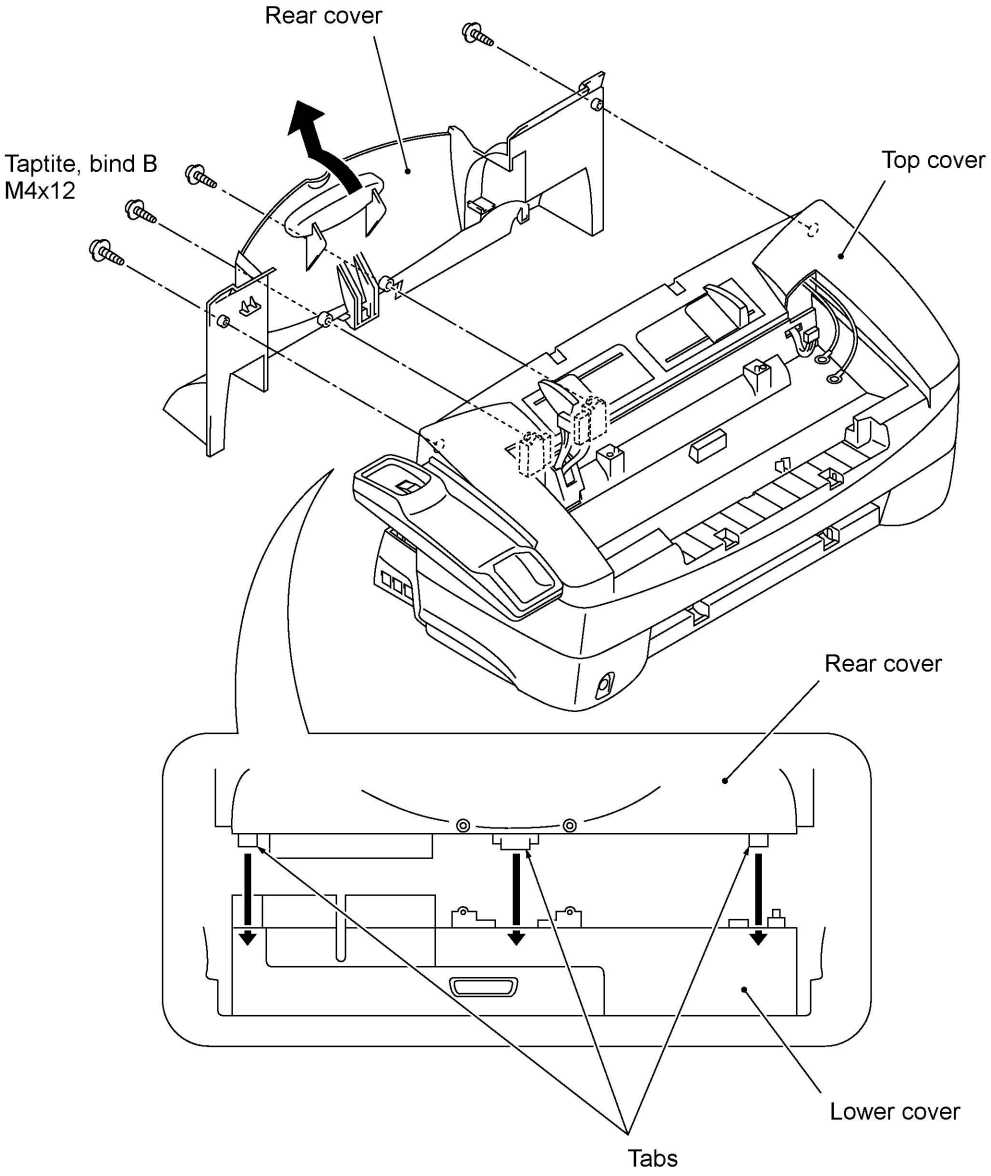

1.8 Auto Sheet Feeder (ASF)

(1) Remove two screws "a" that secure the ASF to the frame chassis.

(2) Remove screw "b" that secures the ASF to the paper feed motor bracket.

(3) At the left end of the ASF (when viewed from the rear), press the latch inwards to unhook it from the square hole provided in the frame chassis, then lift up the ASF.

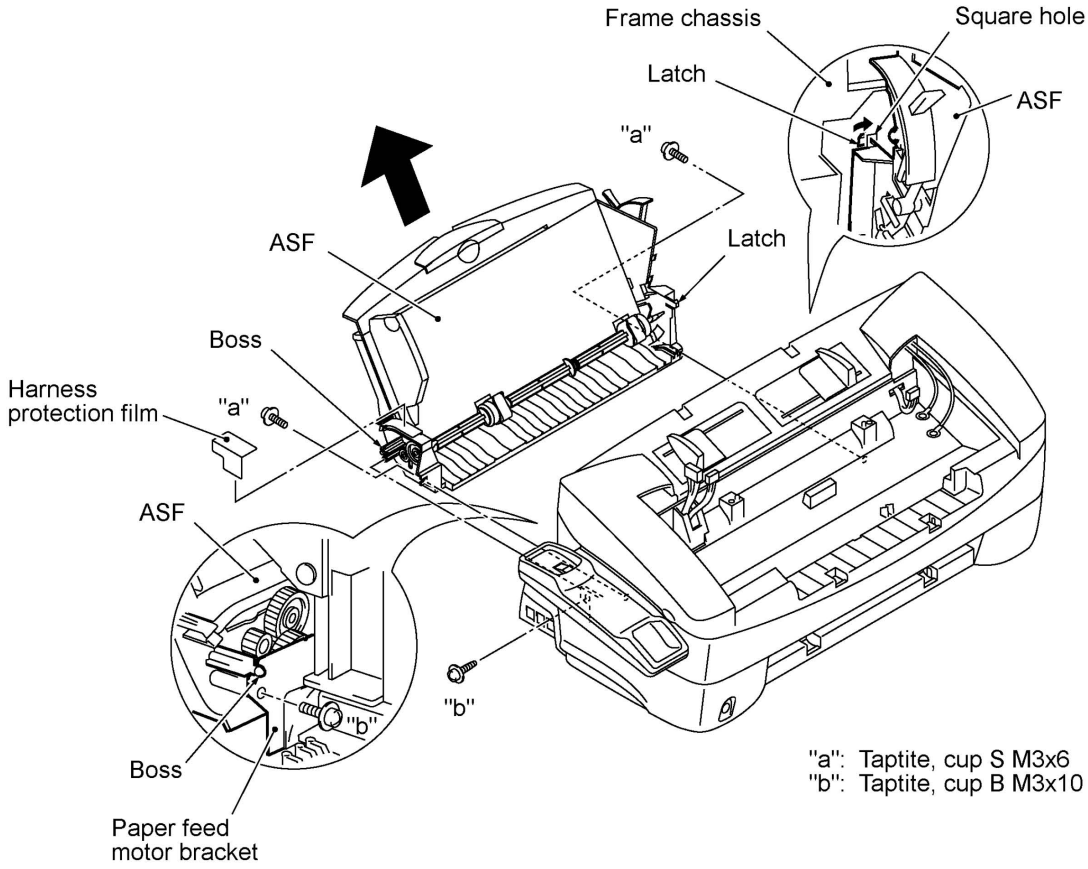

■ Reassembling Notes

- When reinstalling the ASF, fit the boss provided on the right end into the cutout of the paper feed motor bracket.
- If you replace the ASF with a new one, attach a new harness protection film to the new ASF as illustrated below. Route the paper feed motor harness on the harness protection film.

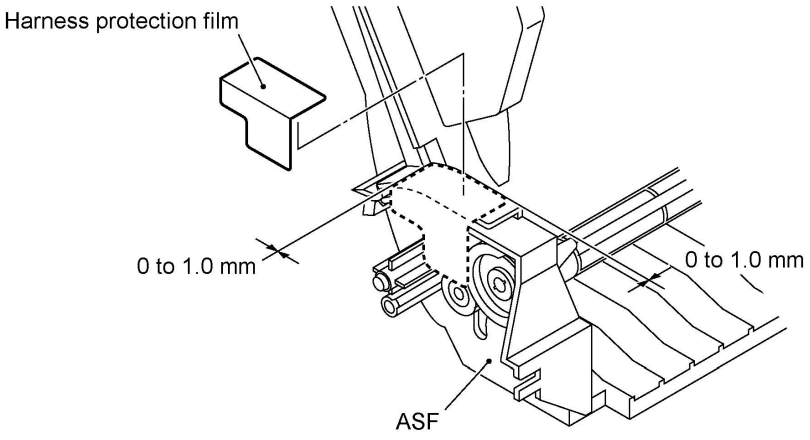

1.9 Inner Cover

(1) Remove the three screws from the inner cover.

(2) Remove the inner cover.

To release the bottom end of the inner cover from the guide provided on the upper cover, lightly pull the top of the inner cover to the rear until it comes out of the upper cover and then pull it up.

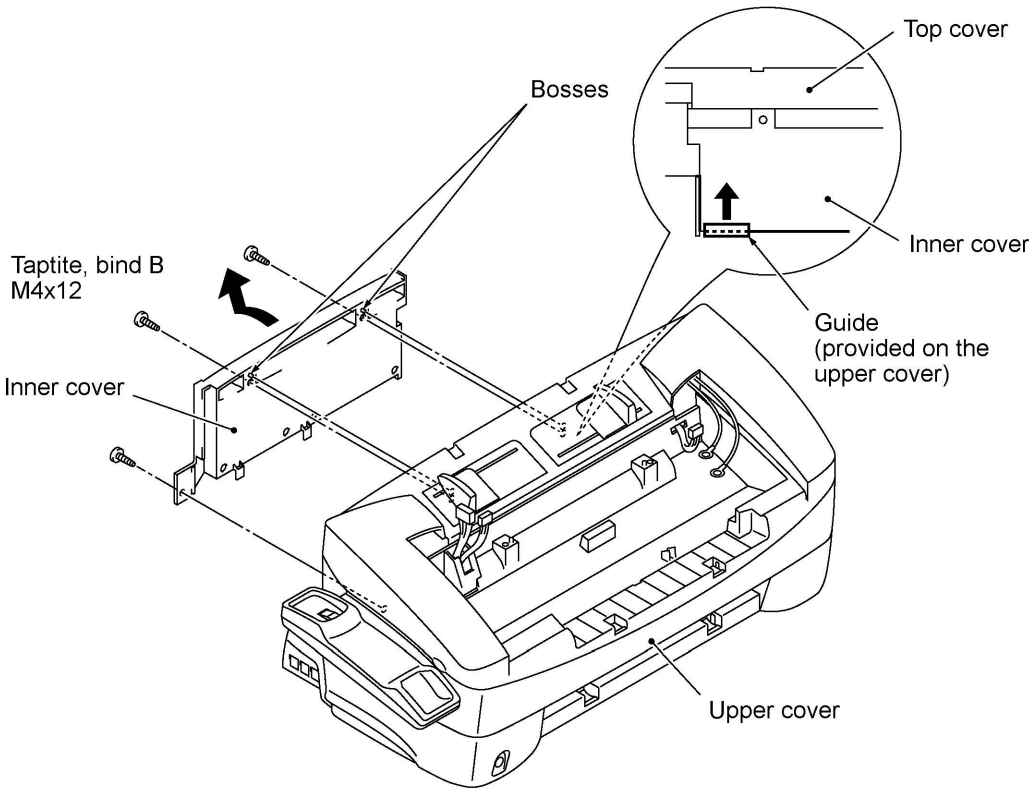

1.10 Battery ASSY

Disconnecting the battery harness with the power cord unplugged will lose the settings (e.g., calendar clock, voice messages, and received FAX data) stored in the RAM. After connecting the battery harness, therefore, you may need to make those settings.

To remove the upper cover ASSY, you need to disconnect the battery harness from the main PCB. To do it without losing the settings stored in the RAM, follow the steps below.

(1) Plug the power cord of the facsimile equipment into a power outlet.

(2) Disconnect the battery harness from the main PCB and take out the battery ASSY from the pocket provided on the upper cover.

(3) Connect the removed battery ASSY to the main PCB again and put the battery ASSY on the main PCB.

(4) Unplug the power cord.

(5) Handle jobs involving the removal of the upper cover ASSY.

(6) After completion of those jobs, plug the power cord.

(7) Disconnect the battery ASSY from the main PCB, put the battery ASSY into the pocket provided on the upper cover, and connect the battery harness to the main PCB.

(8) Unplug the power cord.

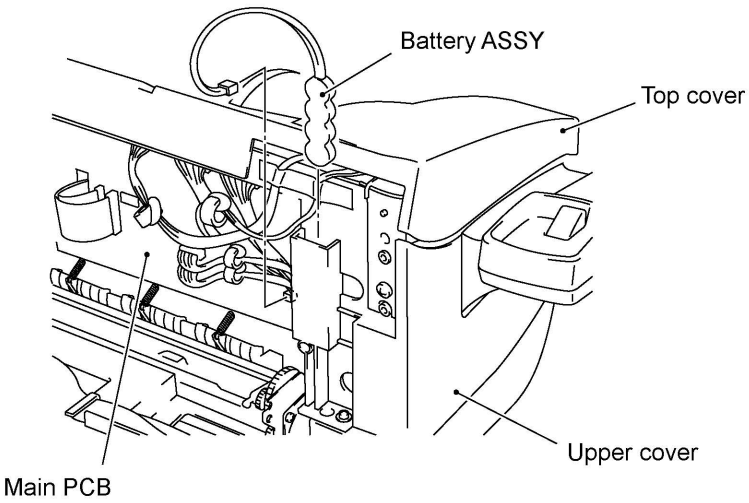

1.11 Upper Cover ASSY

(1) Disconnect the following six harnesses (seven harnesses if the battery ASSY has not been removed) from the main PCB:

- Cover sensor harness
- Panel-main harness
- CIS harness
- Speaker harness
- Hook switch harness
- Scanner motor harness
- (Battery harness if not disconnected yet)

(2) Remove screw "b" that secures the three grounding wires.

(3) Remove two screws "a."

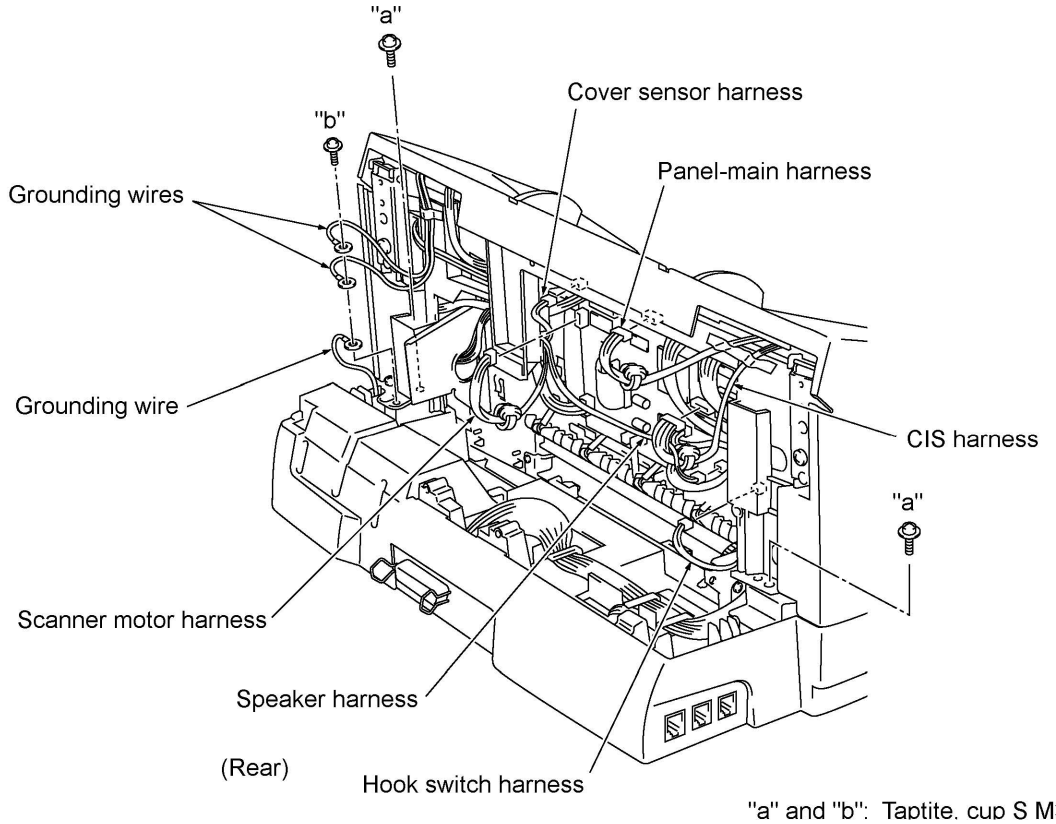

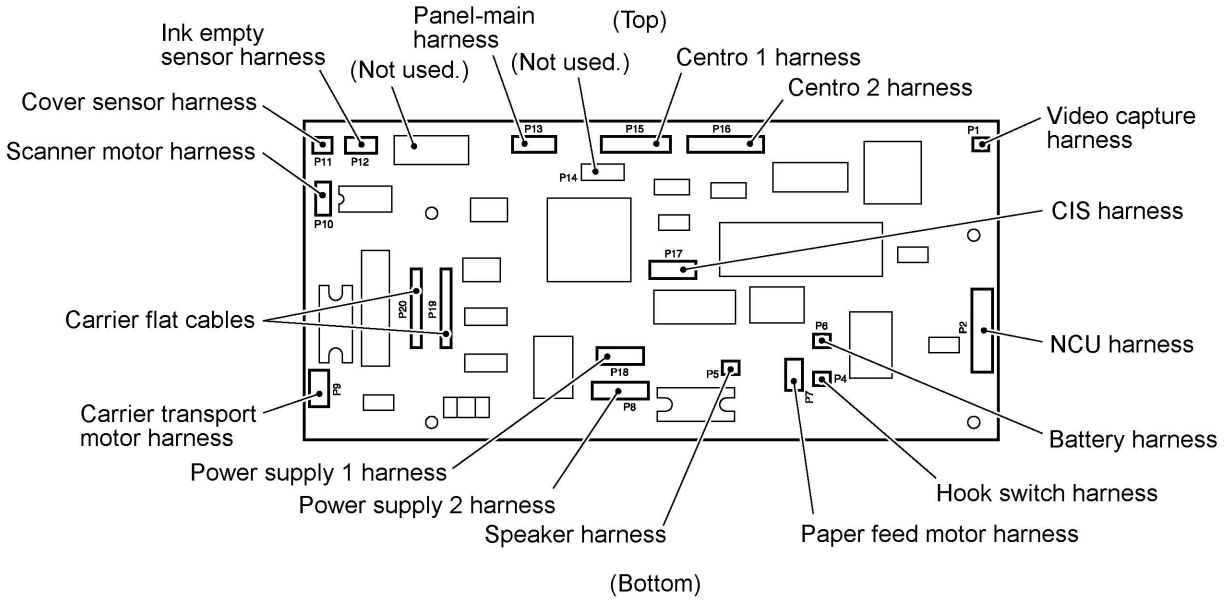

(4) Open the top cover.

(5) Remove two screws "c."

(6) Lift the upper cover ASSY up and off the lower cover.

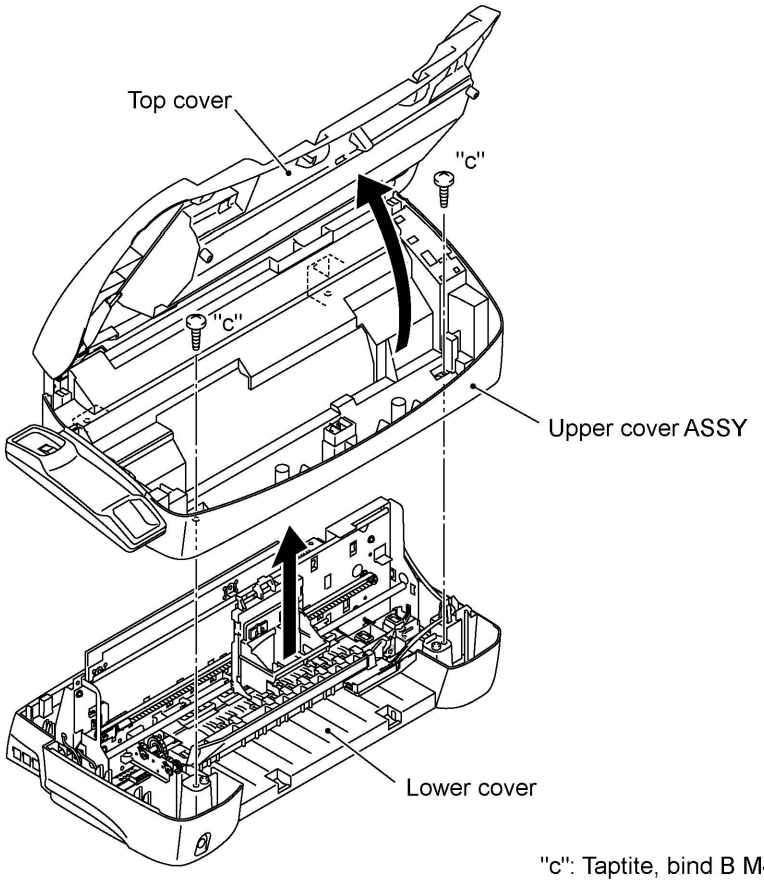

"c": Taptite, bind B M4x12

■ Reassembling Notes

- Route the harnesses as shown in Section 1.34.

1.12 Top Cover ASSY

(1) Remove two screws.

(2) Remove the adhesive tape that secures the panel-main harness and CIS harness to the upper cover.

(3) Take off the top cover in the direction of the arrow.

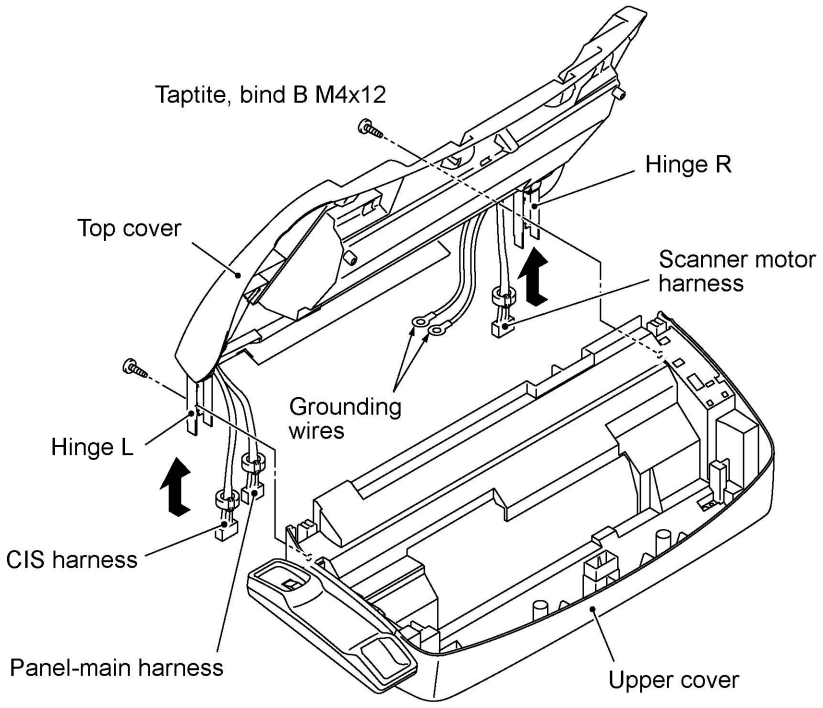

(4) Place the top cover upside down.

(5) Remove two screws from each of the hinges R and L, then take off those hinges. (See the illustration given on the next page.)

The grounding wires, panel-main harness, and CIS harness also come off.

(6) Cut off the binder that secures the scanner motor harness to the support provided on the top cover.

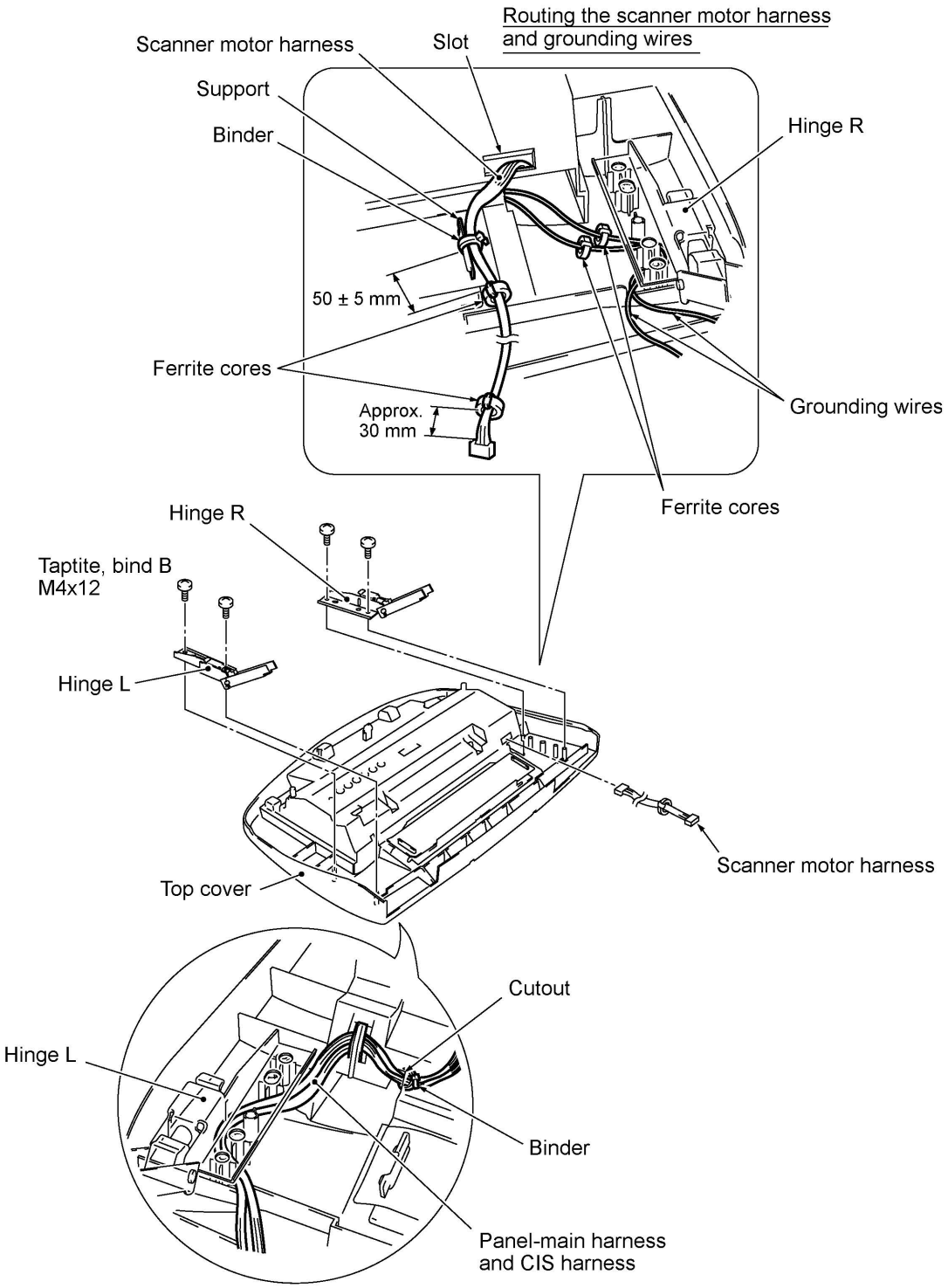

Routing the panel-main harness and CIS harness

■ Reassembling Notes

- When securing the hinge R, route the two grounding wires as illustrated above, taking care not to pinch them between the hinge and top cover.
- As illustrated above, route the scanner motor harness and secure it to the support with a binder so that the distance from the ferrite core to the secured point comes to 50 ±5 mm.

- When securing the hinge L, route the panel-main harness and CIS harness as illustrated on the previous page, taking care not to pinch them between the hinge and top cover.
- When securing the hinge R, route the two grounding wires as illustrated on the previous page.
- If the stopper shaft has worked out of the hinge (R or L), assemble the hinge components so that the end of the compression spring comes to the rear side of the cam follower as shown below.

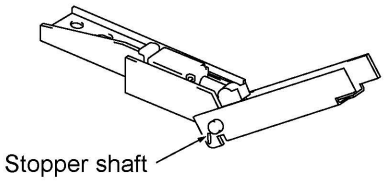

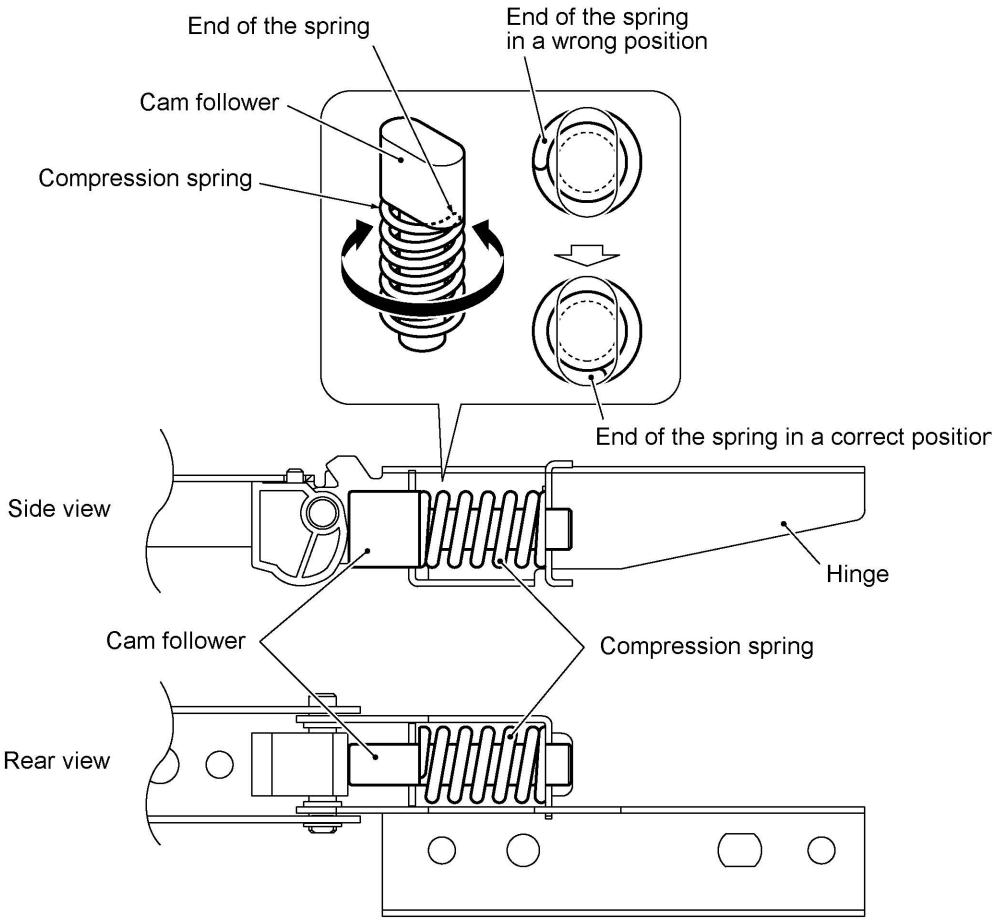

1.13 Handset Mount and Hook Switch PCB ASSY

(1) Open the top cover.

(2) Remove the two screws from the handset mount.

(3) Twist the handset mount so that it tilts over to the left and its upper end works out of the bosses provided on the upper cover.

NOTE: Do not pull the handset mount away from the upper cover. The hook switch harness is connected to the main PCB mounted on the frame chassis.

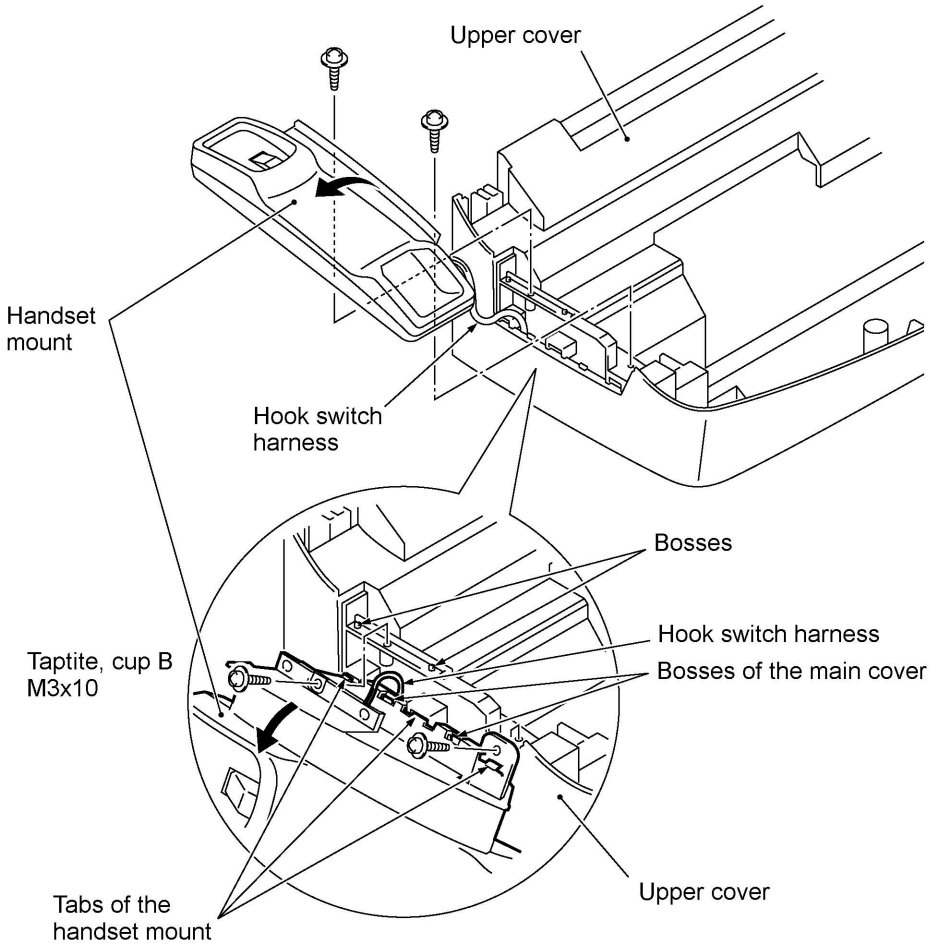

(4) Disassemble the handset mount by unhooking two latches "a" of the upper handset mount with a flat screwdriver.

(5) Remove the hook switch PCB ASSY by unhooking latch "b."

(6) Disconnect the hook switch harness from the hook switch PCB.

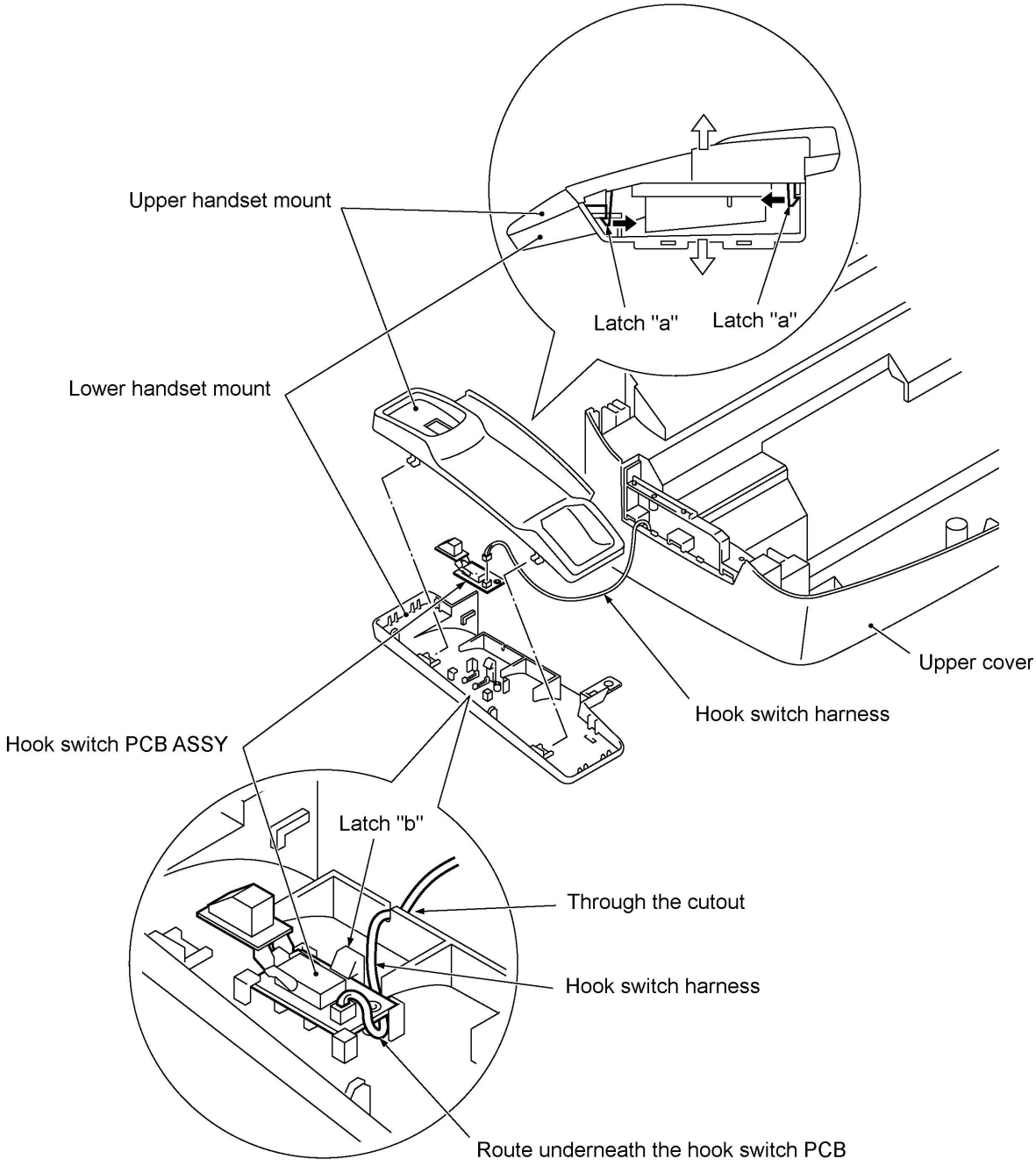

Routing of the hook switch harness

■ Reassembling Notes

- When assembling the upper and lower handset mounts, route the hook switch harness underneath the hook switch PCB and through the cutout as shown above. Take care not to pinch the harness between the upper and lower mounts.

1.14 Top Cover Lock Spring

(1) Remove the screw and take out the top cover lock spring.

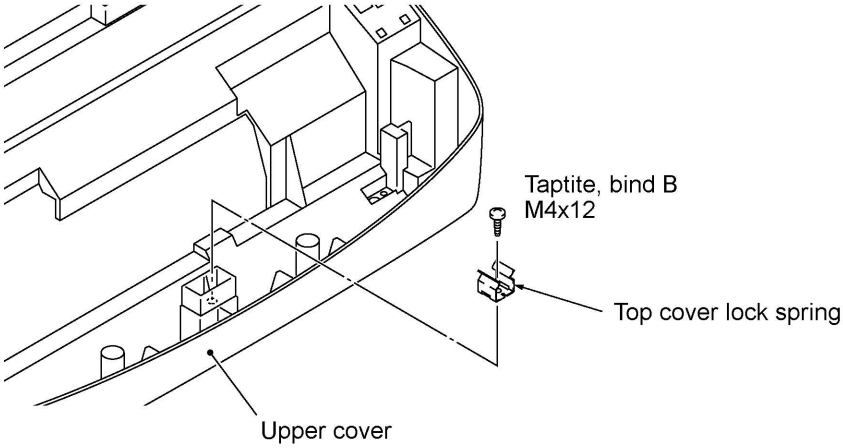

1.15 Speaker and Cover Sensor PCB

(1) Turn the upper cover upside down.
(2) Take out speaker harness from the three guides and pull up the speaker.
(3) Remove the screw and lift up the speaker spring.
(4) Take out the cover sensor harness from the three guides and unhook the cover sensor PCB.

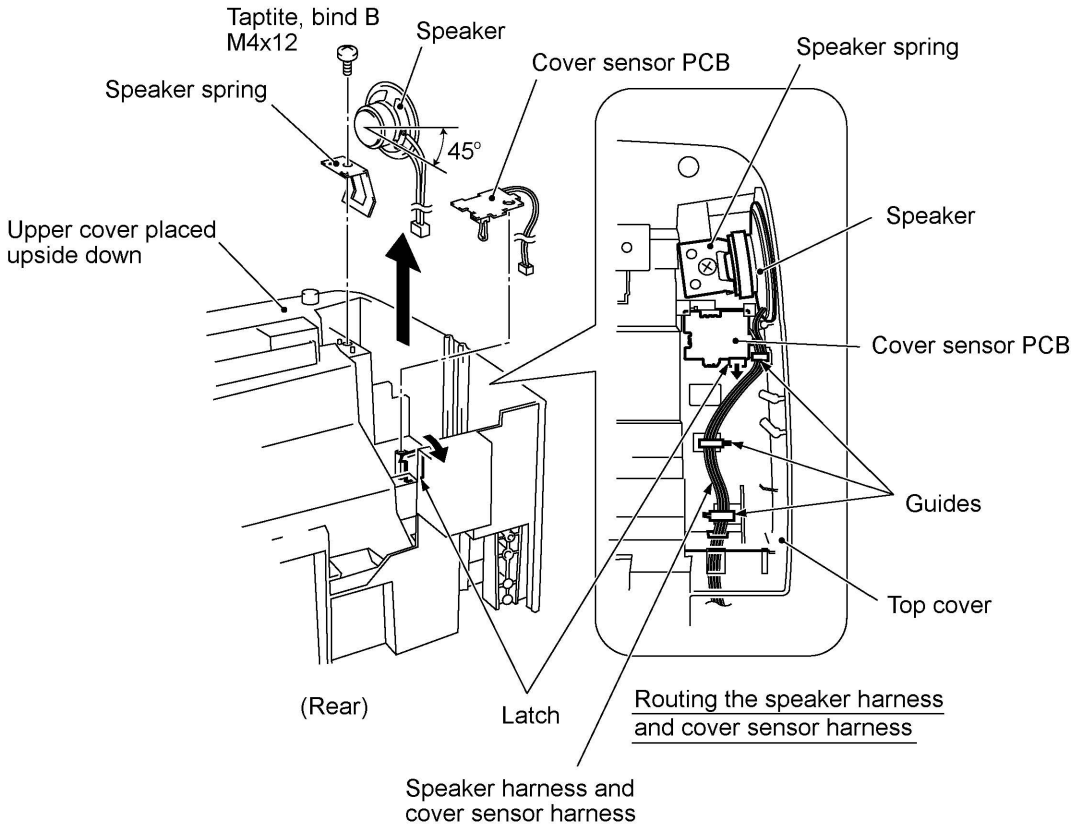

■ Reassembling Notes

- When setting the speaker back into place, angle the speaker harness downwards at 45° as shown above.

1.16 Main PCB and Insulation Film

(1) Disconnect the centro harnesses (1 and 2) and power supply harnesses (1 and 2) from the main PCB.

(2) Disconnect the following harnesses and flat cables from the main PCB:

- Carrier flat cables
- Ink empty sensor harness
- Carrier transport motor harness
- Paper feed motor harness
- NCU harness
- Video capture harness

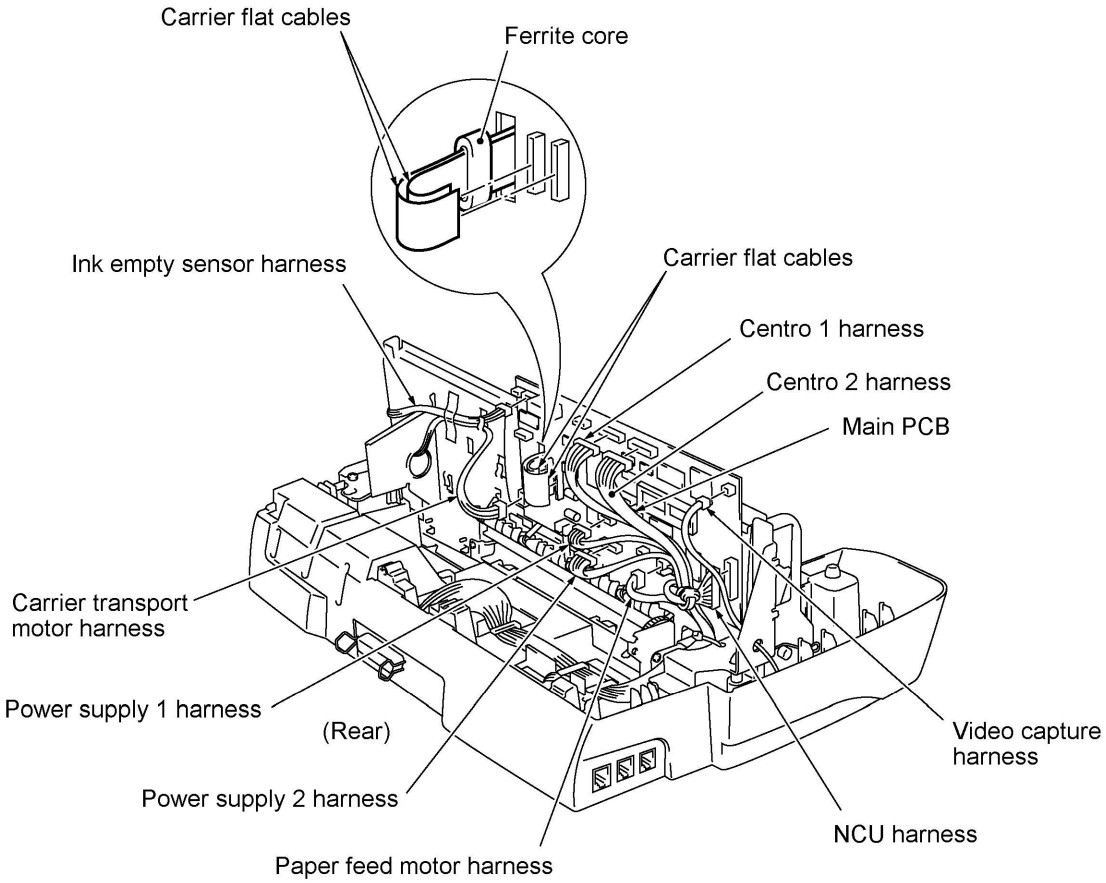

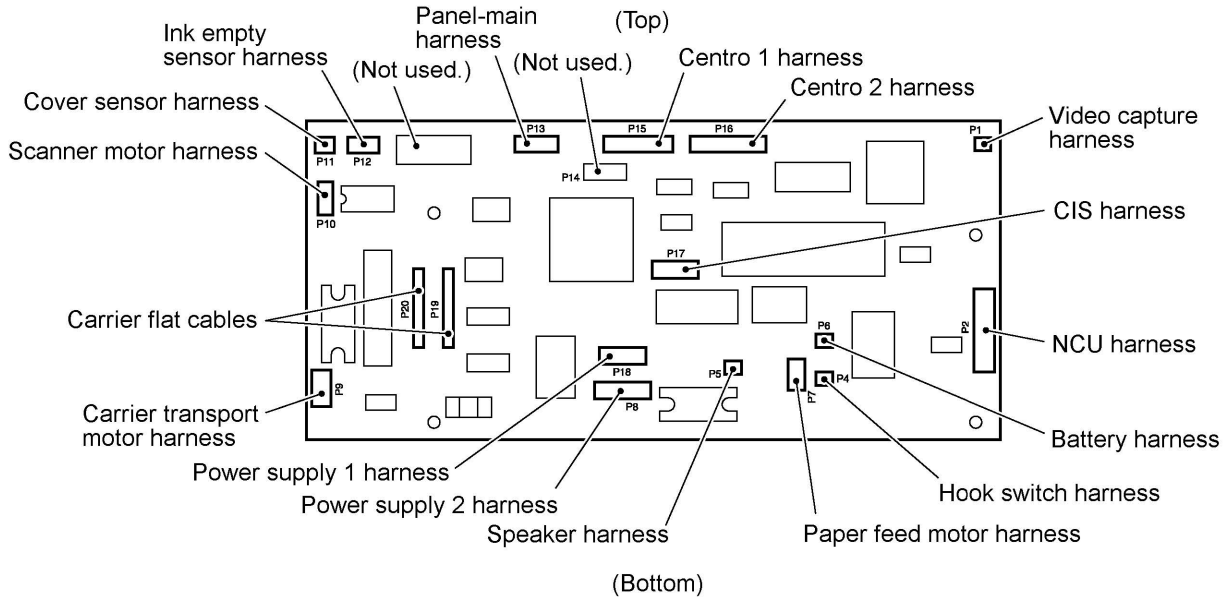

(3) Remove the four screws from the main PCB, then take off the main PCB while tilting the sensor lever (registration sensor actuator) to the rear.

(4) Remove the insulation film from tabs provided on the frame chassis in the direction of arrows ① and ②.

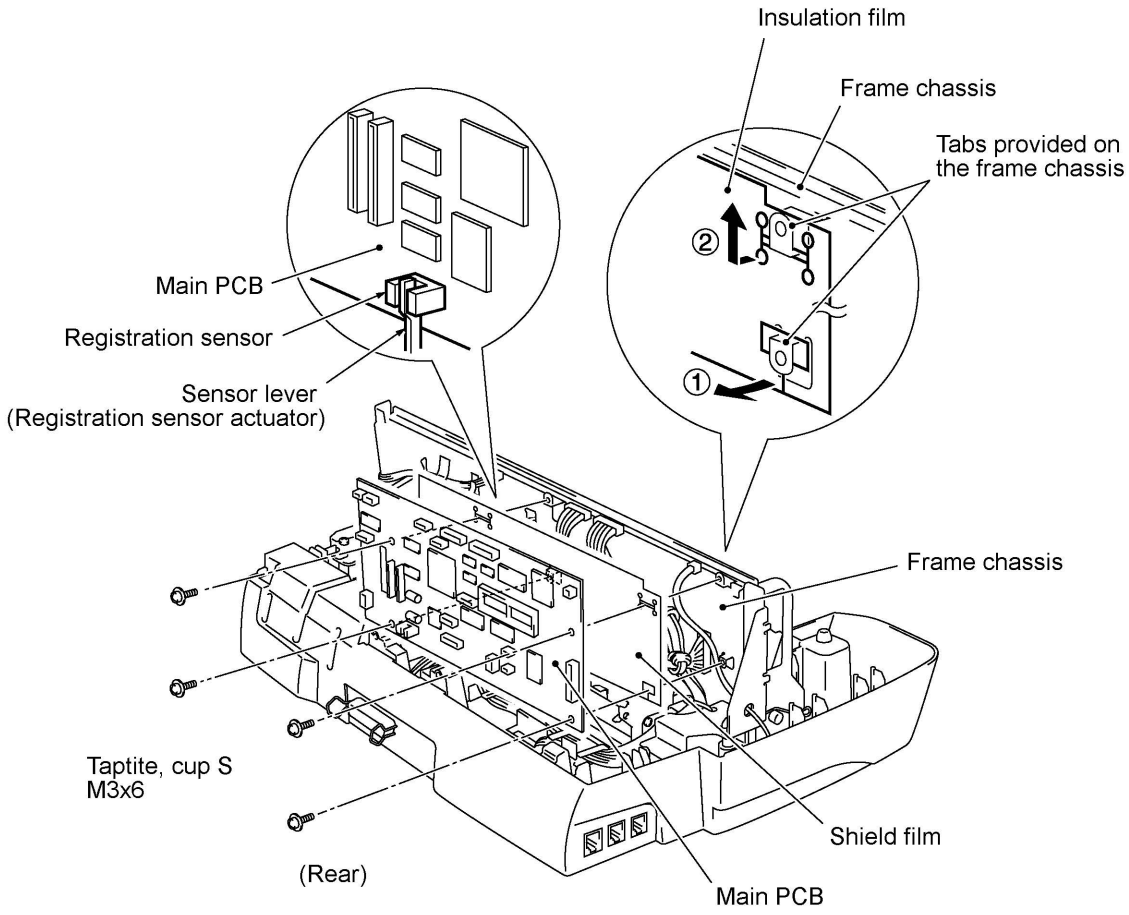

■ Reassembling Notes

- When securing the main PCB, tilt the sensor lever (registration sensor actuator) to the rear to fit it in the registration sensor.
- When connecting the carrier flat cables to the main PCB, take care not to bend or scratch them.
- Route the harnesses and twist some of them as shown in Section 1.34.
- After you replace the main PCB, be sure to follow the flowchart given on the next page.

Setting up the main PCB after replacement

- **Important** -

NOTE: When replacing the main PCB, it is recommended that you replace all ink cartridges in order to maintain accurate ink level information.

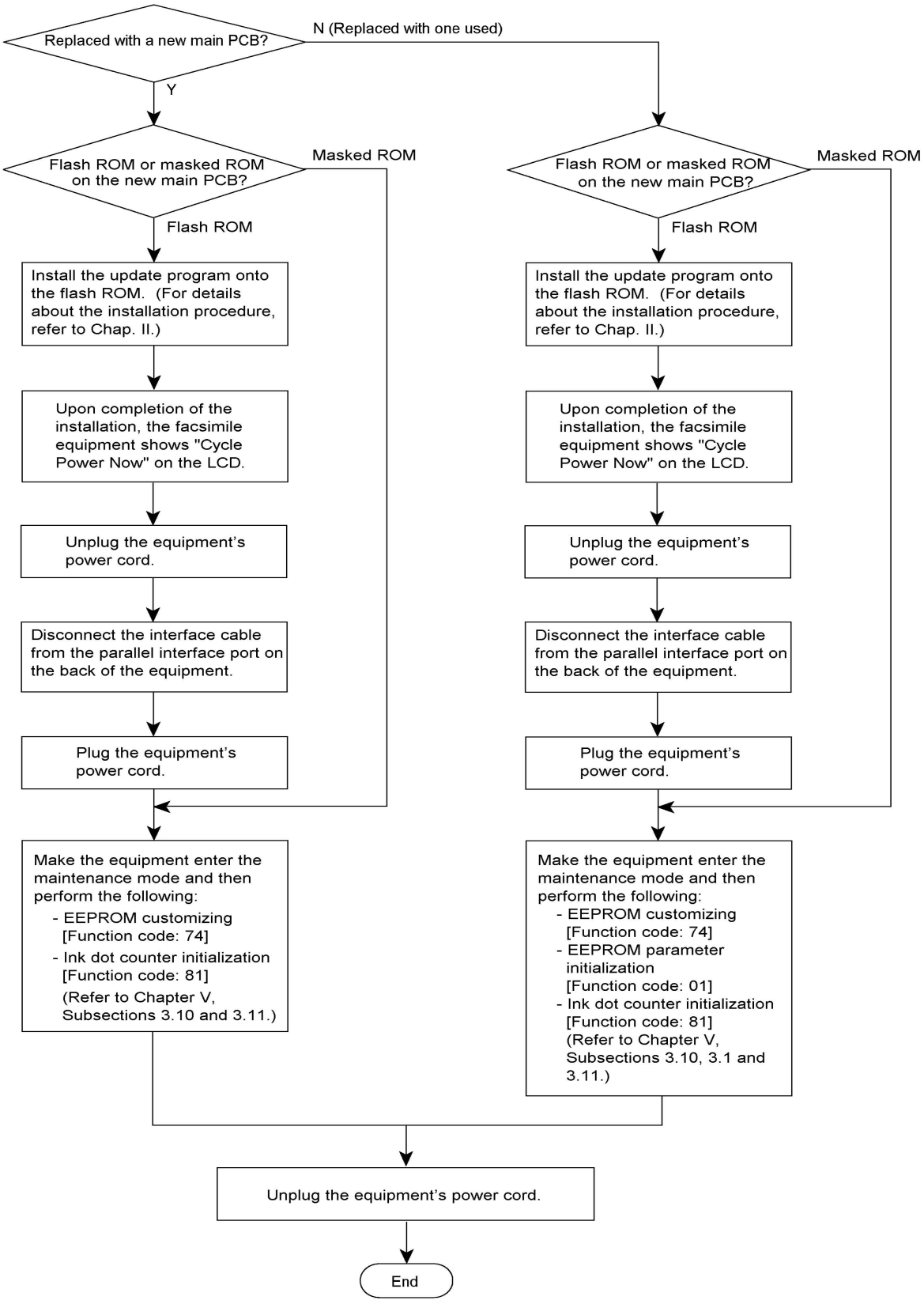

1.17 Video PCB

(1) Disconnect the video capture harness from the video PCB.

(2) Remove the screw and take out the video PCB.

(3) Take out the video capture harness from the three guides. Disconnect it from the main PCB, if connected, then pull it out to the rear.

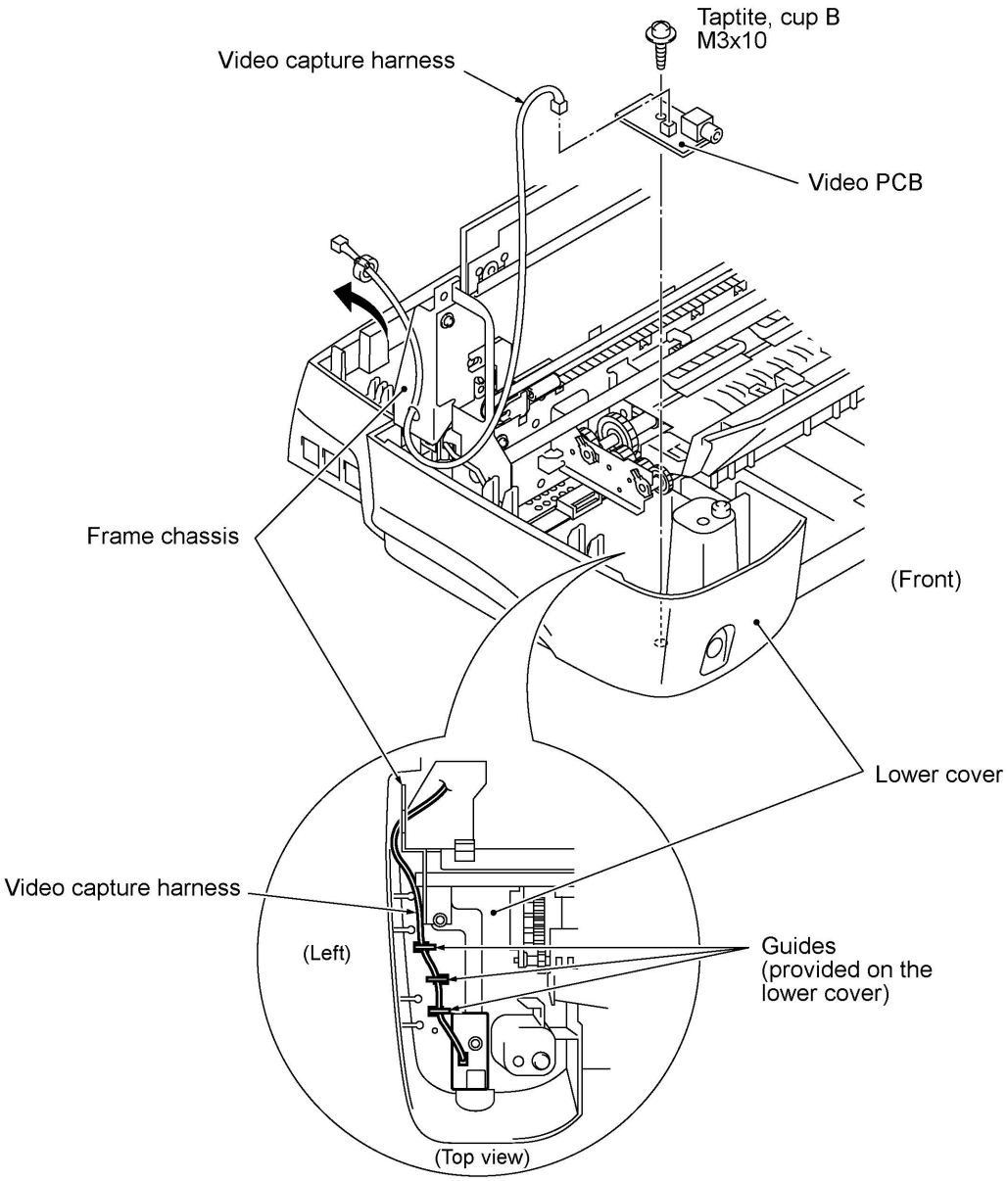

Routing the video capture harness

■ Reassembling Notes

- From the rear, pass the video capture harness through the hole provided in the left side of the frame chassis (when viewed from the front), and then route it through the three guides provided on the lower cover as shown above.

1.18 Ink Empty Sensor PCB ASSY

(1) Peel off adhesive tape that attaches the ink empty sensor harness to the frame chassis at each of the rear and right side.

(2) Take out the ink empty sensor harness from the guide slot and the latches.

(3) Unhook the ink empty sensor PCB ASSY from the base frame in the direction of arrows ①, ②, and ③.

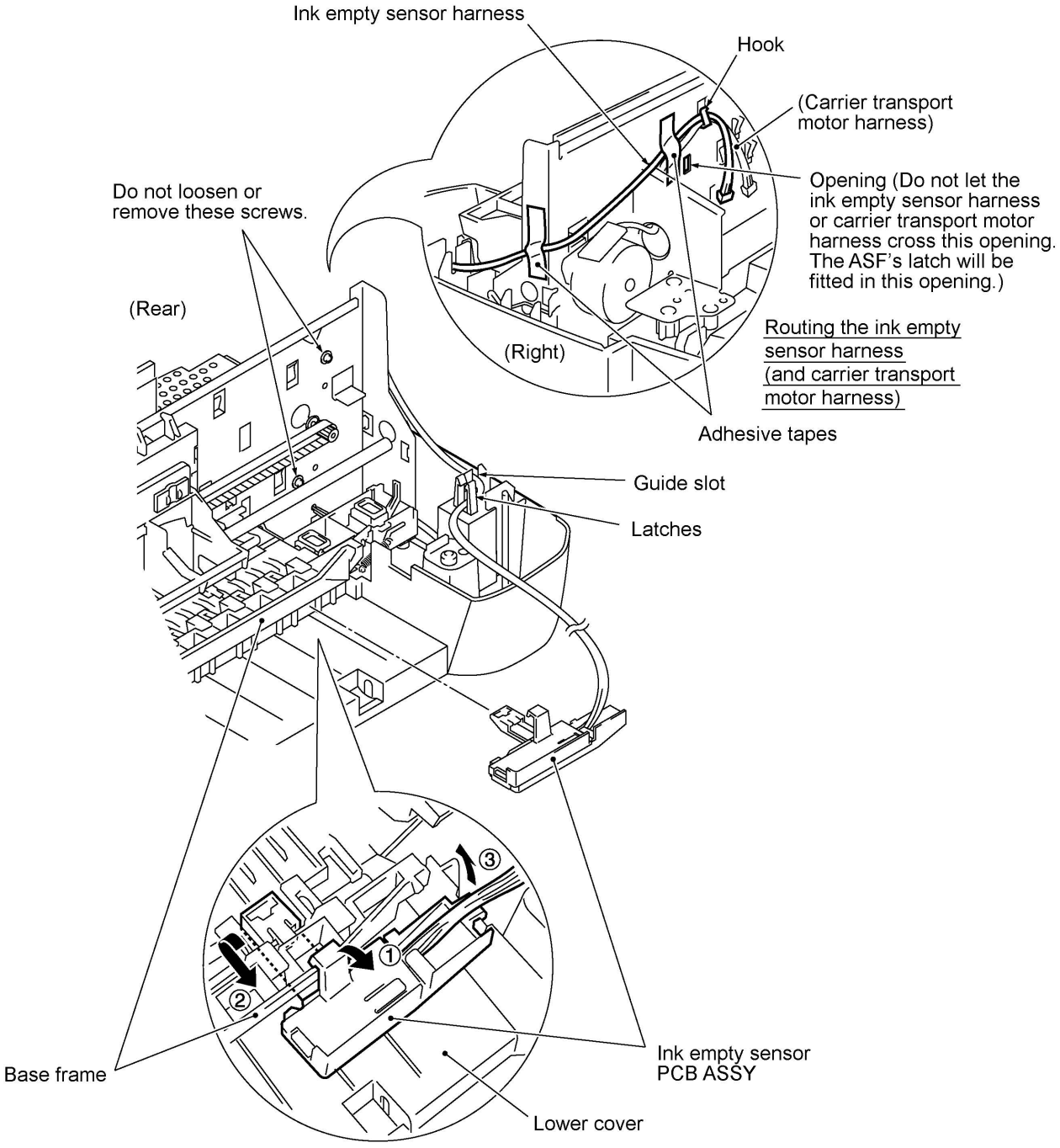

Unhooking the ink empty sensor PCB ASSY

(4) Disassemble the ink empty sensor PCB ASSY according to the steps below:

- Pull up the latch of the sensor cover (in the direction of arrow ①) and slide the sensor cover in the direction of arrow ② to separate the sensor cover from the sensor holder.
- Remove the ink empty sensor PCB.
- Remove the star wheels and their springs.

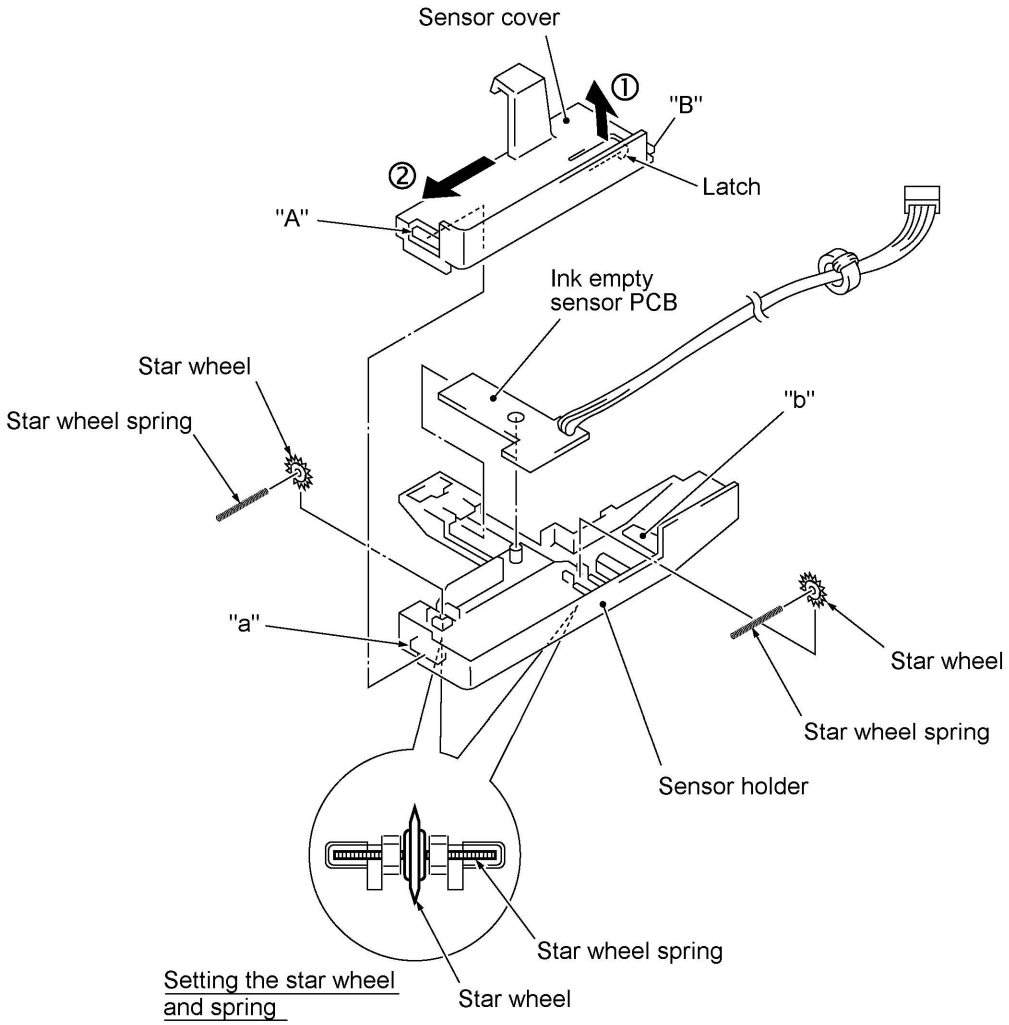

■ Reassembling Notes

- When setting the ink empty sensor PCB to the sensor holder, face the device-mounting side down.
- When setting the sensor cover to the sensor holder, fit hole "A" of the sensor cover over tab "a" of the sensor holder and then insert "B" into "b" as shown above.

1.19 Bottom Plate

(1) Remove two "x" screws and six "y" screws.

(2) Lightly lift up the rear edge of the bottom plate and disconnect the centro harnesses (1 and 2) and power supply harnesses (1 and 2).

(3) If the upper cover ASSY has not been removed so that the grounding wire has not been released from the frame chassis, you need to release the grounding wire from the bottom plate by removing screw "z" (see the illustration given on the next page).

(4) Pull out the AC cord bushing from the lower cover, then remove the bottom plate (together with the interface PCB and power supply PCB).

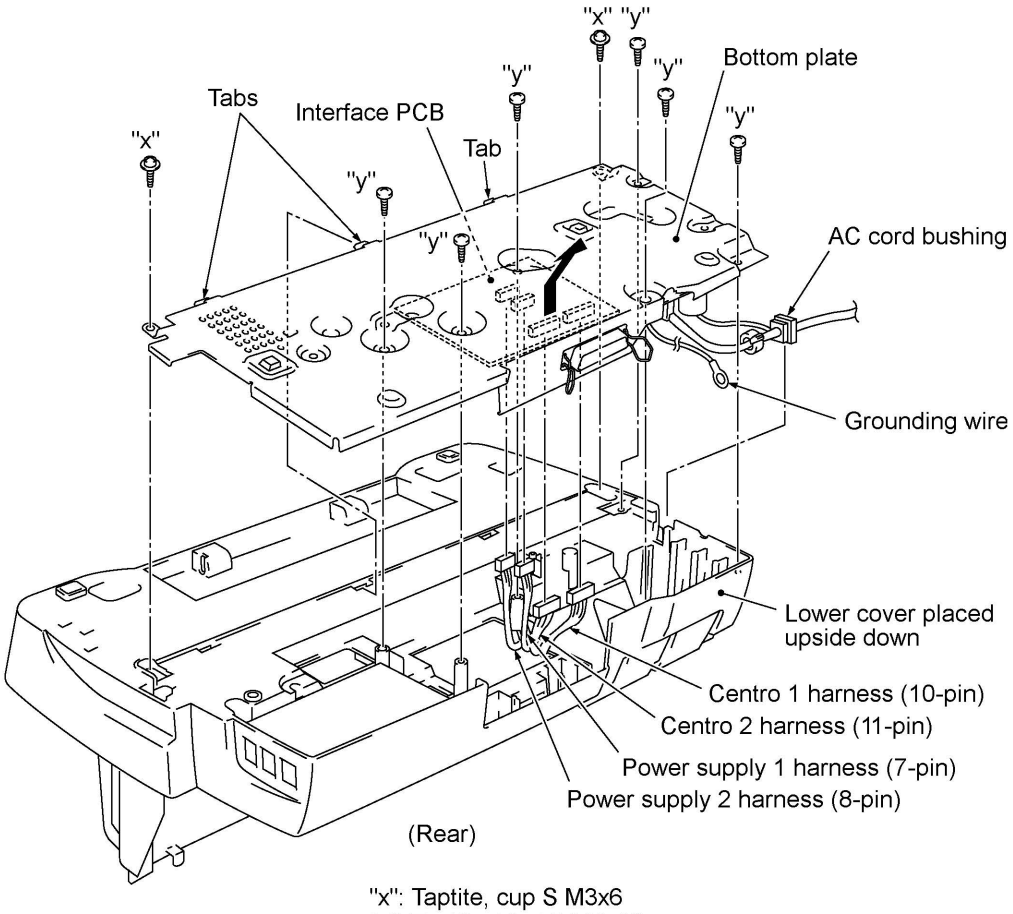

"x": Taptite, cup S M3x6
"y": Taptite, bind B M4x12

1.20 Power Supply PCB and Interface PCB

(1) Place the bottom plate rightside up.
(2) Remove two screws "d" from the power supply PCB.
(3) Remove screw "e."
(4) Disconnect the power supply PCB from the interface PCB.
(5) Remove two screws "f" and take off the interface PCB.

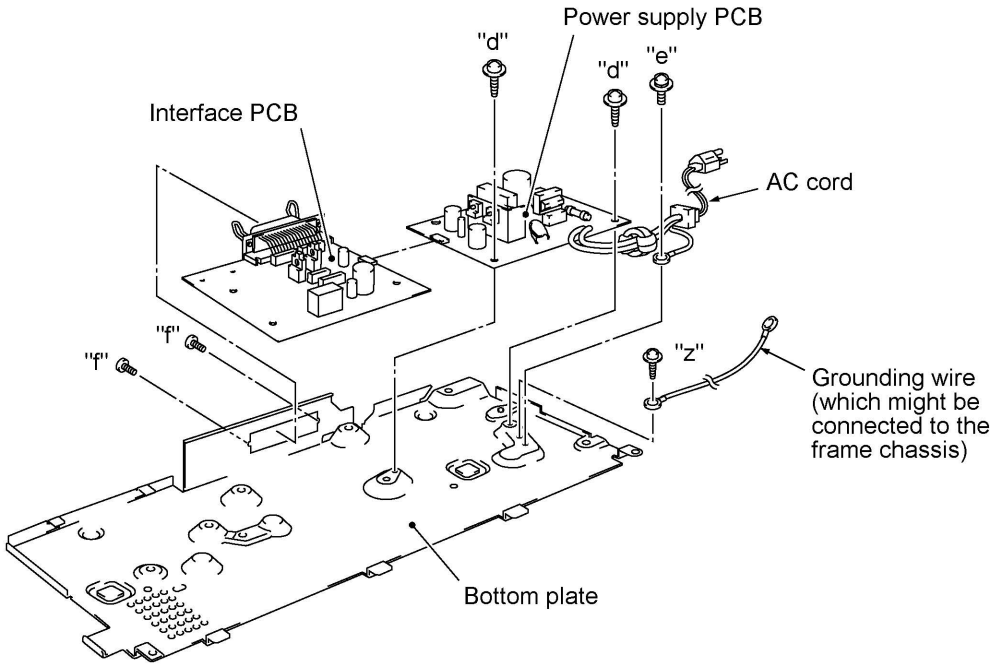

"d": Taptite, cup S M3x6
"e": Screw, pan (washer) M4x6DB
"f": Screw, pan M3x6
"z": Taptite, cup S M3x6

■ Reassembling Notes

- Install the interface PCB and power supply PCB in this order.

1.21 NCU PCB

(1) Remove the screw from the NCU PCB.

(2) Lightly lift up the NCU PCB and disconnect the NCU harness.

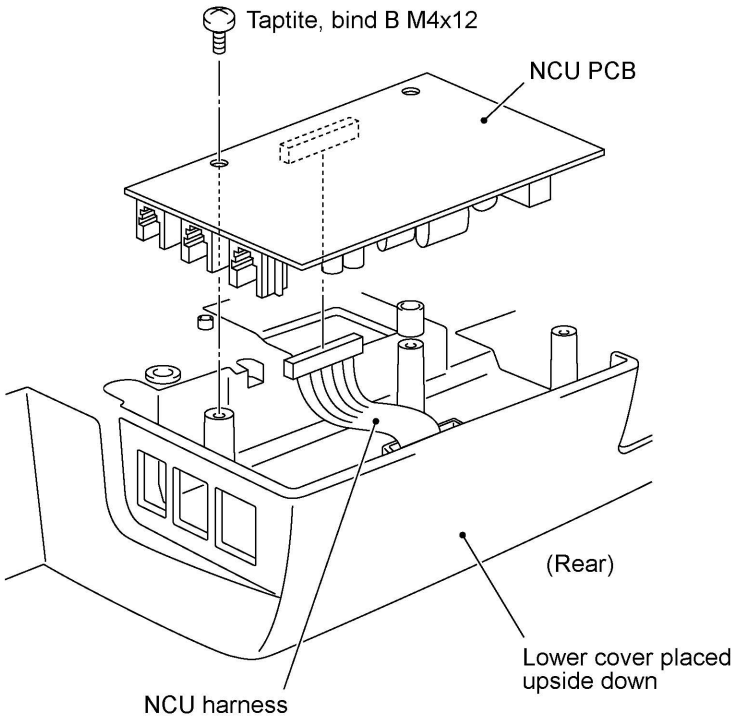

1.22 Frame Chassis ASSY

(1) If the bottom plate has not been removed, remove two screws "x" (shown in the illustration in Section 1.19) from the bottom plate.

(2) Place the machine rightside up.

(3) Cut off the binder that secures harnesses to the frame chassis.

(4) Remove two "a" screws and four "b" screws.

(5) Lift up the frame chassis ASSY.

(6) Remove the video grounding plate.

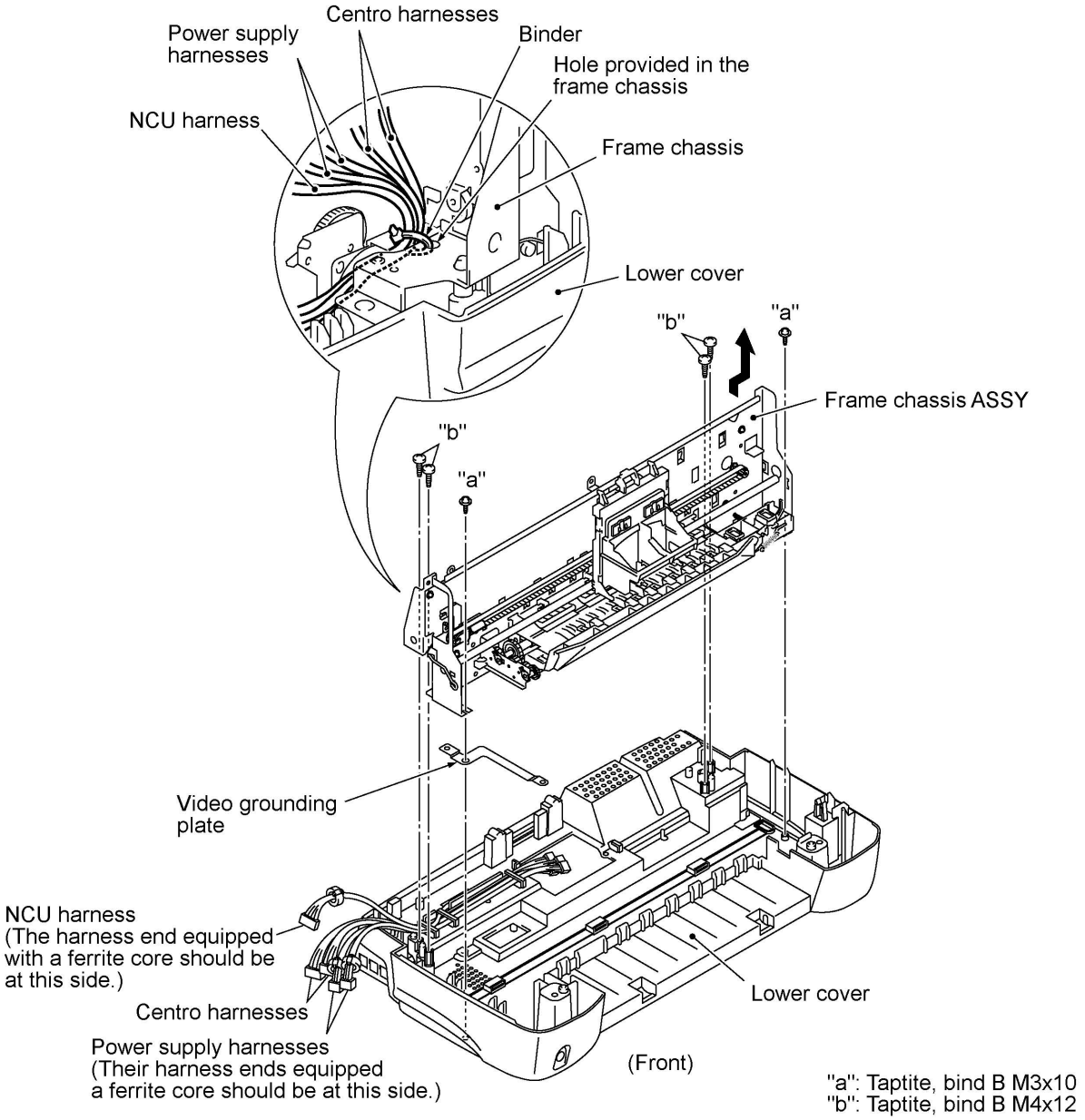

■ Reassembling Notes

- Route the centro harnesses, power supply harnesses, and NCU harness as illustrated above. The NCU harness and power supply harnesses should be routed so that those harness ends equipped with a ferrite core come to the outer side as shown above.

1.23 Paper Feed Motor

(1) On the front side of the frame chassis, loosen screw "g" in order to allow a screwdriver to access screw "h."

(2) Remove two screws "h" and take out the paper feed motor.

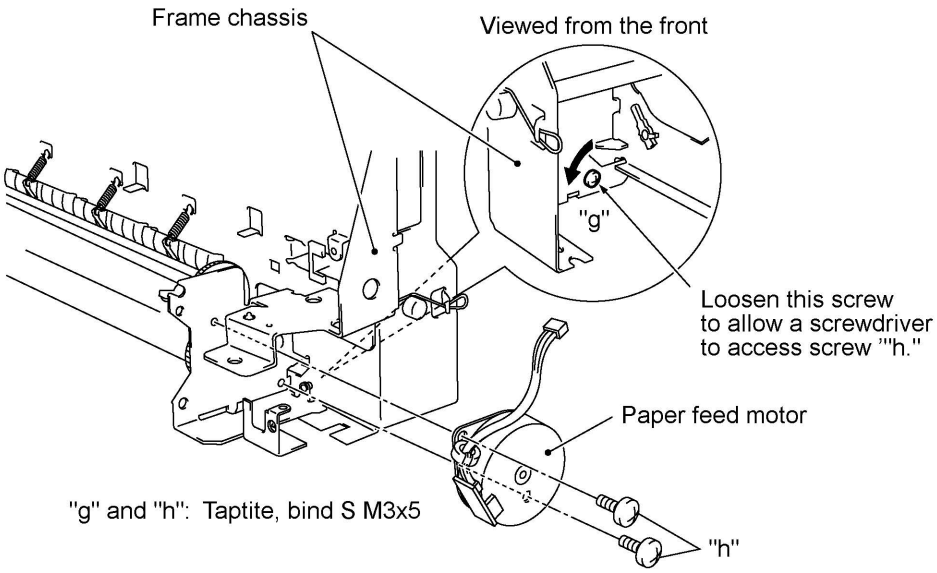

■ Reassembling Notes

- If you replace the paper feed motor with a new one, attach a ferrite core to the harness of the new motor so that the ferrite core comes to 10 ±5 mm away from the harness end at the motor side. Wind the harness around the ferrite core by two turns and then secure it with a binder.

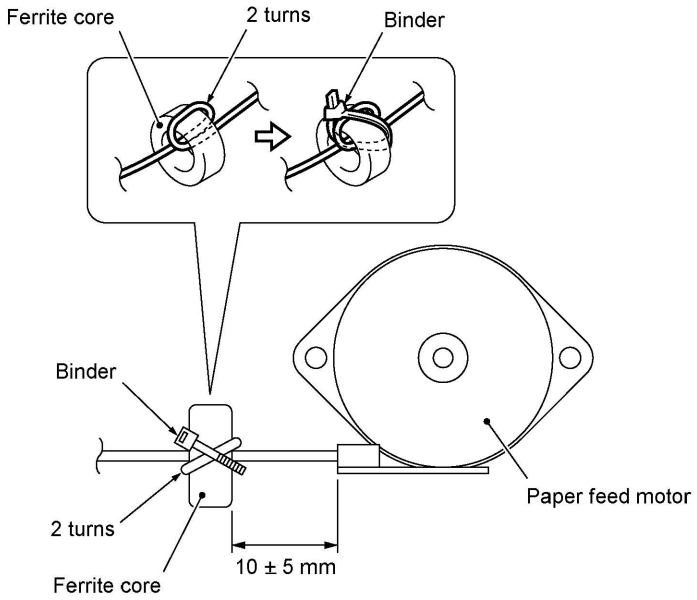

1.24 Carrier Transport Motor, Main Shaft, Timing Belt, and Carrier ASSY

(1) Move the carrier to the center of its travel (in the direction of arrow ①).

(2) Remove the spring cuff.

(3) While pressing the idle pulley holder to the right (in the direction of arrow ②), remove the timing belt from the carrier transport motor pulley (arrow ③). Then remove the timing belt from the idle pulley (arrow ④).

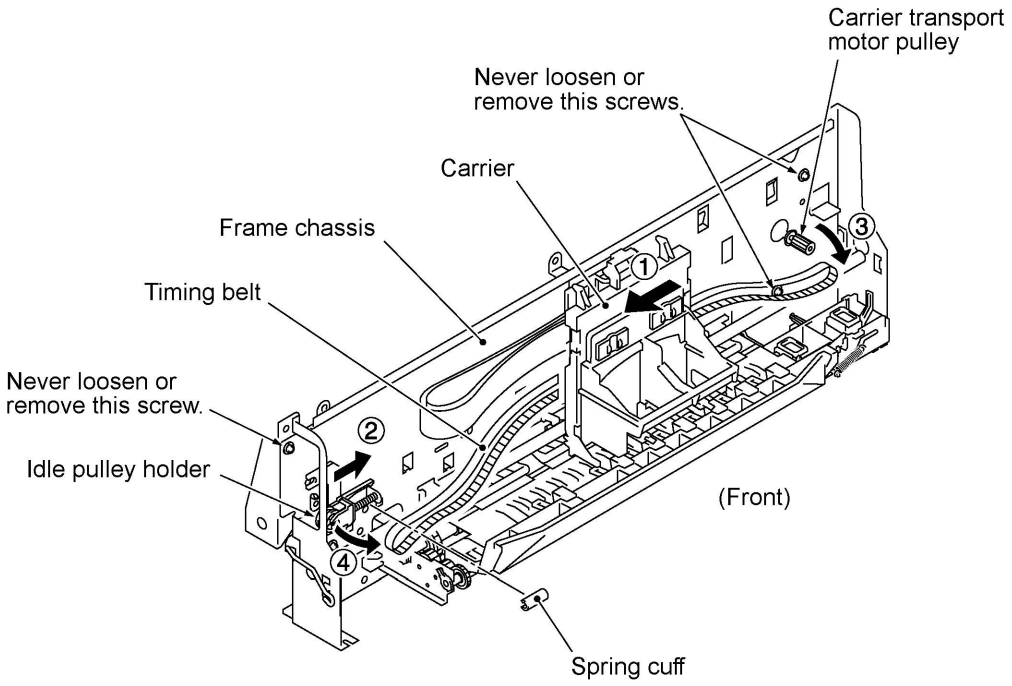

(4) Remove the two screws from the carrier transport motor and take it off the frame chassis as shown on the next page.

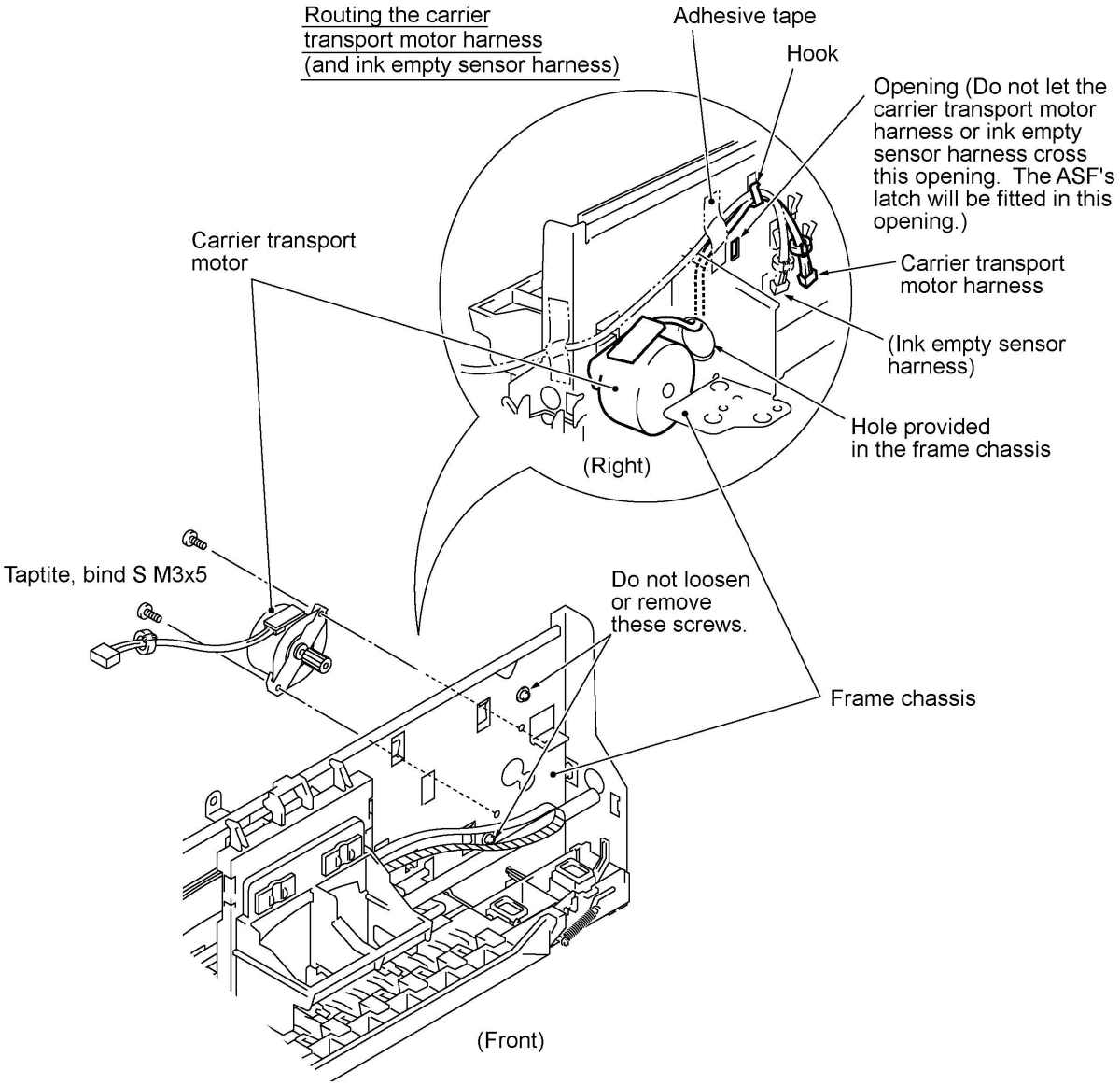

(5) At the right end of the frame chassis, remove the main shaft holder and main shaft holder B. (See the illustration given on the next page.)

(6) At the left end, remove the main shaft holder.

(7) While supporting the left end of the main shaft, take up the right end and pull out the shaft to the right.

(8) Remove the carrier's support from the top edge of the frame chassis and take out the carrier.

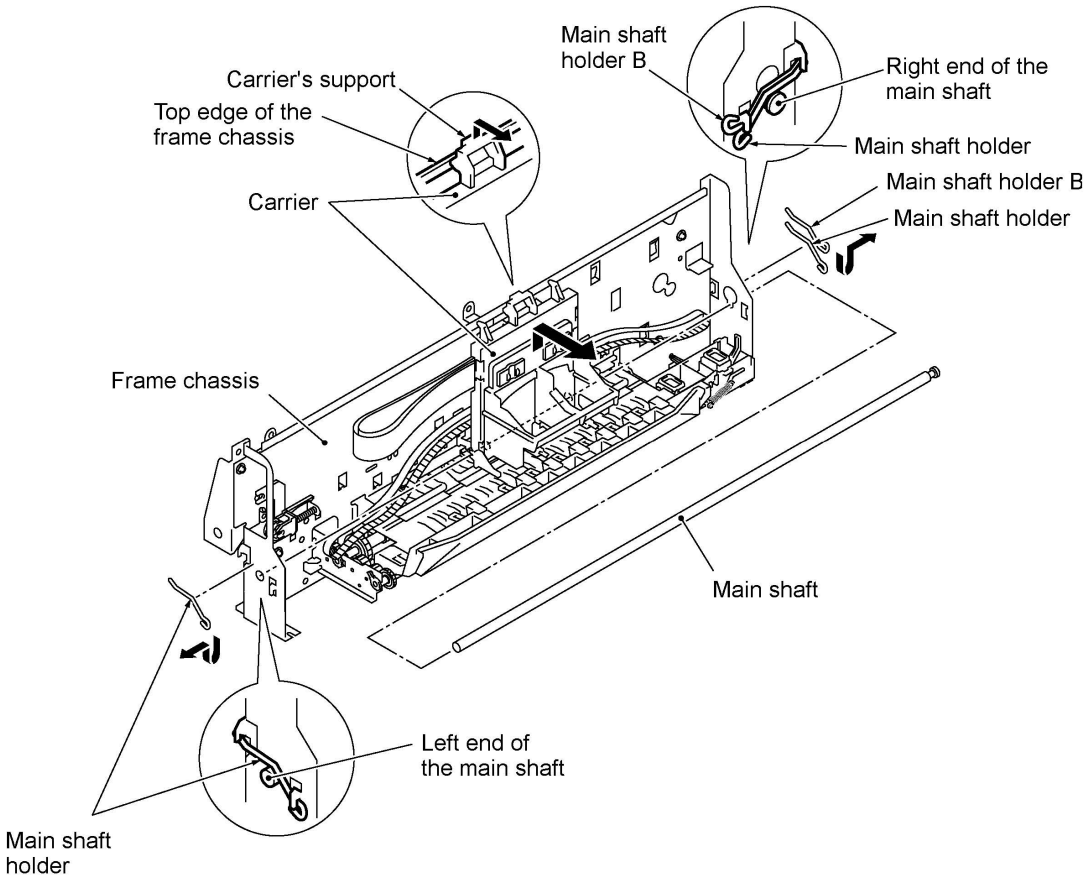

(9) Unhook the cable stopper from the frame chassis. Then the carrier ASSY is released from the frame chassis. (The cable stopper is a part of the carrier ASSY.)

(10) Remove the timing belt from the carrier.

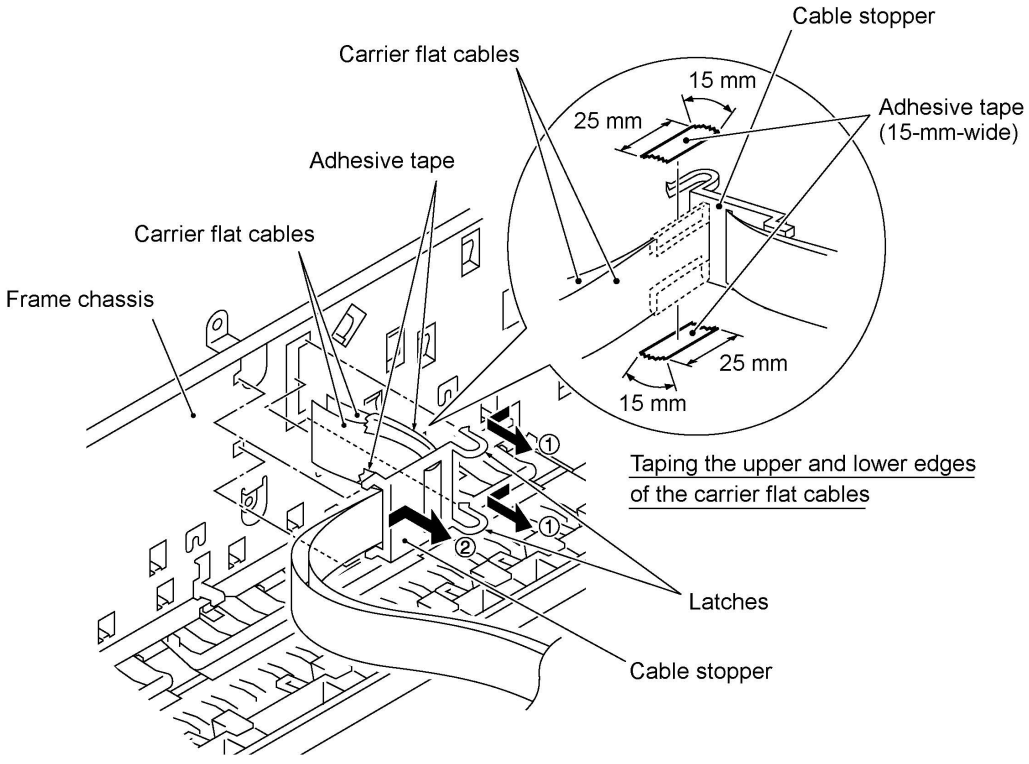

■ Reassembling Notes

- If you replace the carrier transport motor with a new one, attach a ferrite core to the harness of the new motor so that the ferrite core comes to 30 ±10 mm away from the harness end at the connector housing side. Wind the harness around the ferrite core by two turns and then secure it with a binder.

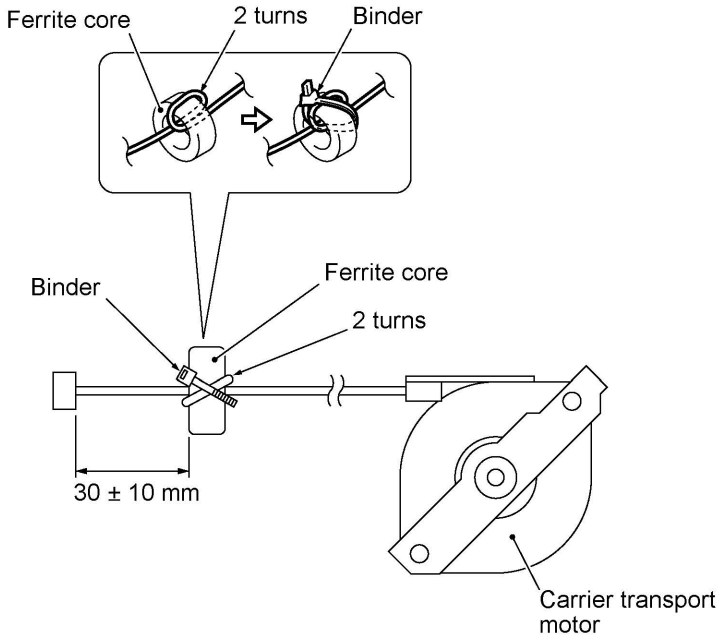

- If you replace the carrier ASSY with a new one, thread the carrier flat cables through the cable stopper and then bind the carrier flat cables together at their upper and lower edges by using two pieces of adhesive tape (15 mm wide by 25 mm long each) as illustrated on the previous page.

1.25 Idle Pulley Holder

(1) Move the carrier to the center of its travel.

(2) Remove the spring cuff if not removed yet.

(3) If the timing belt is installed, remove the timing belt from the carrier transport motor gear and the idle pulley while pressing the idle pulley holder to the right.

(4) Unhook the idle pulley holder.

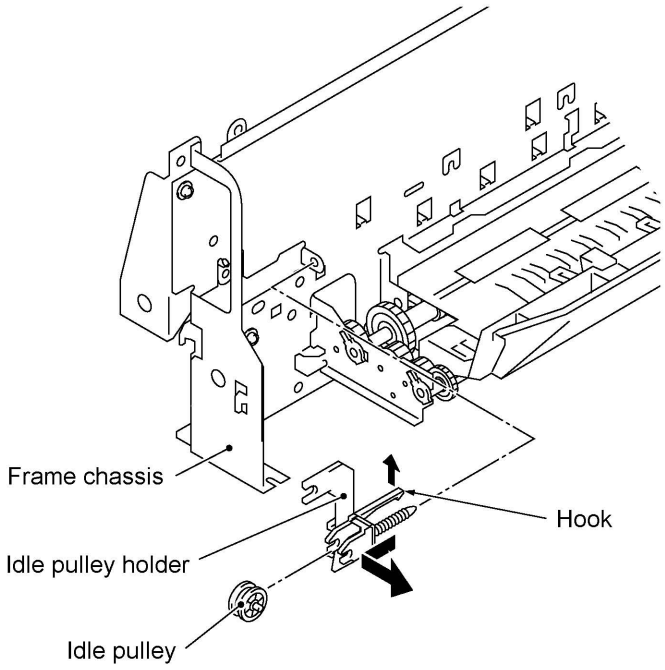

1.26 Maintenance ASSY

(1) On the rear side of the frame chassis, unhook the two latches of the maintenance ASSY.

NOTE: The maintenance ASSY is glued to the frame chassis at four points, so you need to remove the glue.

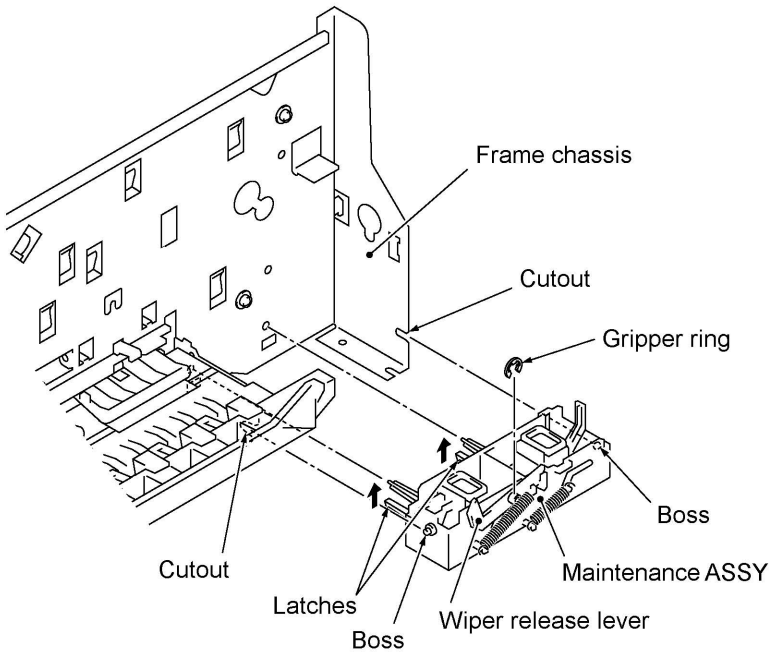

■ Reassembling Notes

- First fit the two bosses of the maintenance ASSY into the cutouts and then snap the ASSY into place.
- When setting the maintenance ASSY back into place or replacing it with a new one, no gluing to the frame chassis is required.
- If you replace the maintenance ASSY with a new one, you need to set a gripper ring to the shaft of the wiper release lever so that the front-to-rear looseness of the wiper release lever comes to 0.5 +0.3/-0 mm.

1.27 Pinch Roller ASSYs

(1) Unhook the four feed springs from the rear of the frame chassis.

(2) Pull out the four pinch roller ASSYs and springs to the rear.

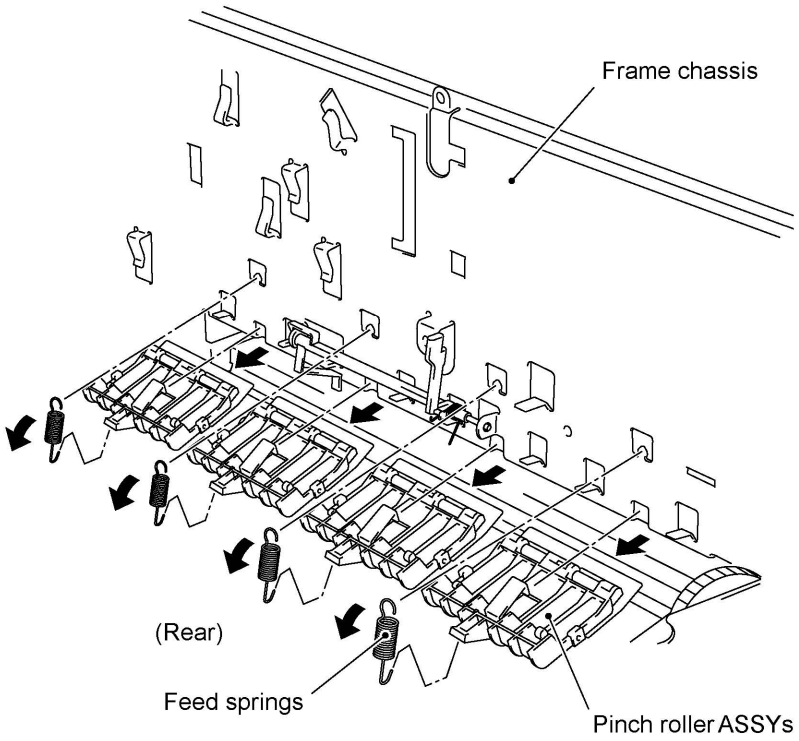

■ Reassembling Notes

- If you have removed the sensor lever (registration sensor actuator), the two feed springs on the two center pinch roller ASSYs should be hooked after setting the sensor lever (registration sensor actuator).

1.28 Sensor Lever (Registration sensor actuator)

(1) Unhook the sensor lever (registration sensor actuator) in the direction of arrow ① and remove it in the direction of arrows ② and ③.

(2) Remove the sensor lever spring.

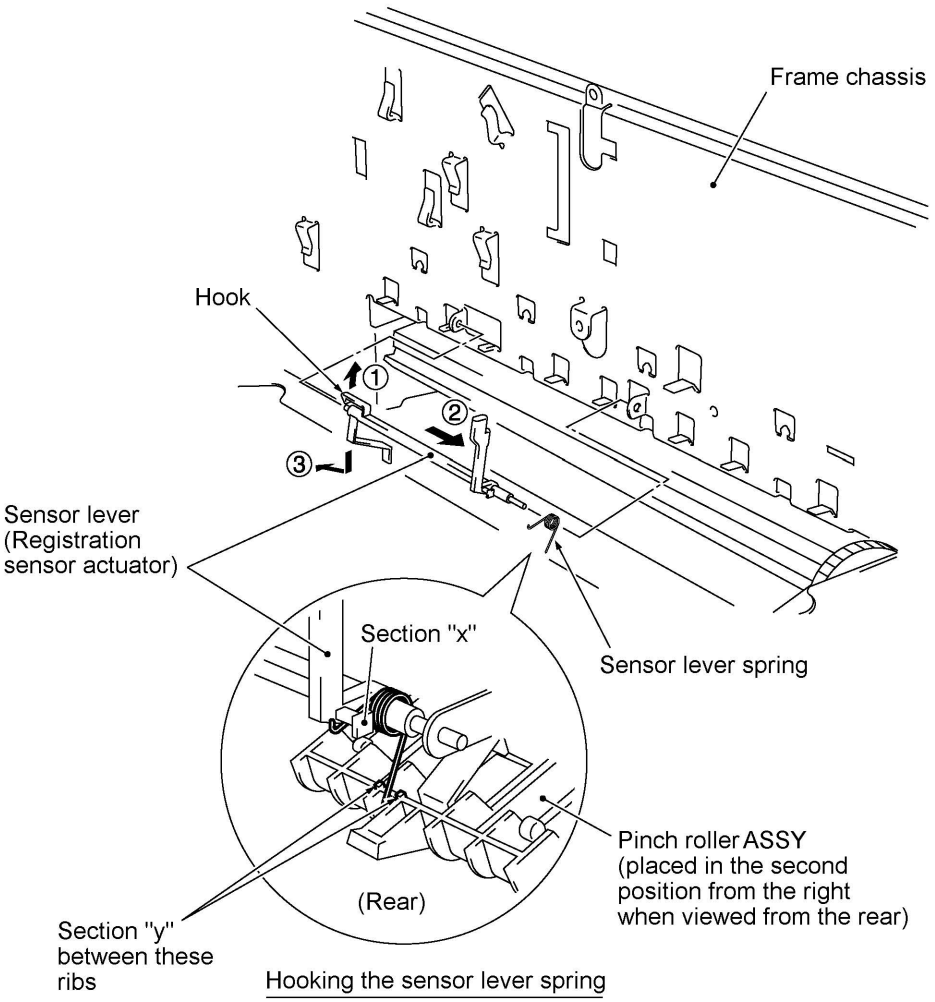

Hooking the sensor lever spring

■ Reassembling Notes

- After setting the four pinch roller ASSYs but before hooking the two feed springs on the two center pinch roller ASSYs, attach the sensor lever to the frame chassis. Hook the bent end and straight end of the sensor lever spring to section "x" of the sensor lever and section "y" between the ribs on the pinch roller ASSY, respectively, as shown above.

1.29 Earth Spring

(1) Unhook the looped end of the earth spring from the base frame ("a") and remove the spring from the frame chassis ("b").

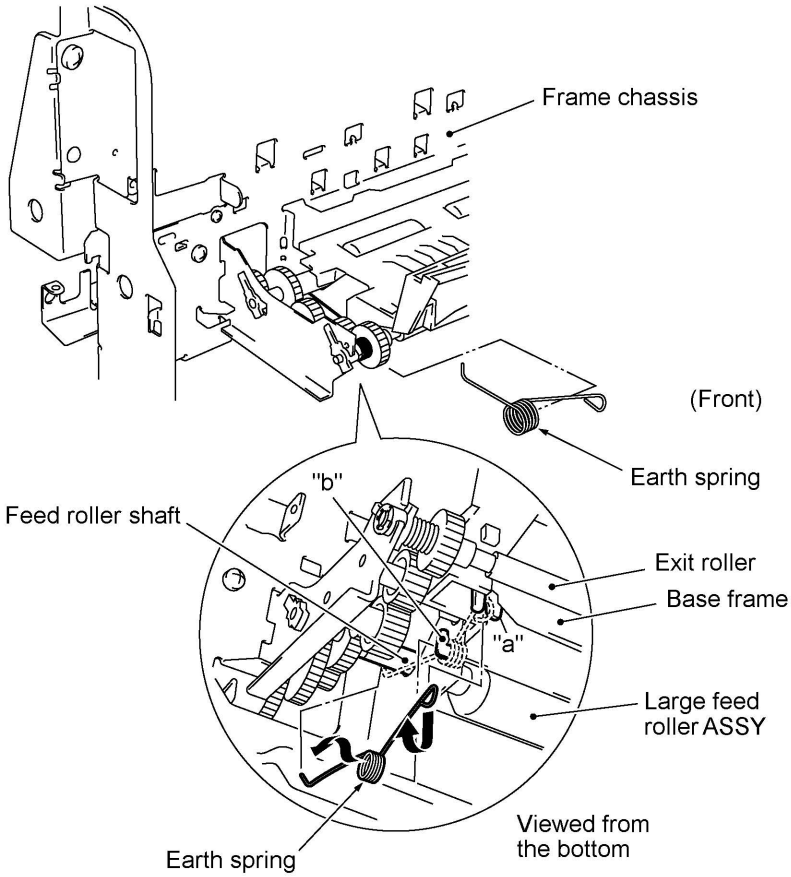

■ Reassembling Notes

- Hook the bent end of the earth spring on the feed roller shaft, set its coil to "b," and then fit its looped end in "a," as illustrated above.

1.30 Exit Roller and Base Frame

(1) From each of the right and left ends of the exit roller shaft, remove the E-ring.

(2) At the left end of the exit roller, pull the arm of the bearing outwards and turn it clockwise (when viewed from the left), then pull it out to the left.

(3) Pull the left end of the exit roller out of the cutout provided in the frame chassis and move the roller to the left. The exit washer and spring also come off.

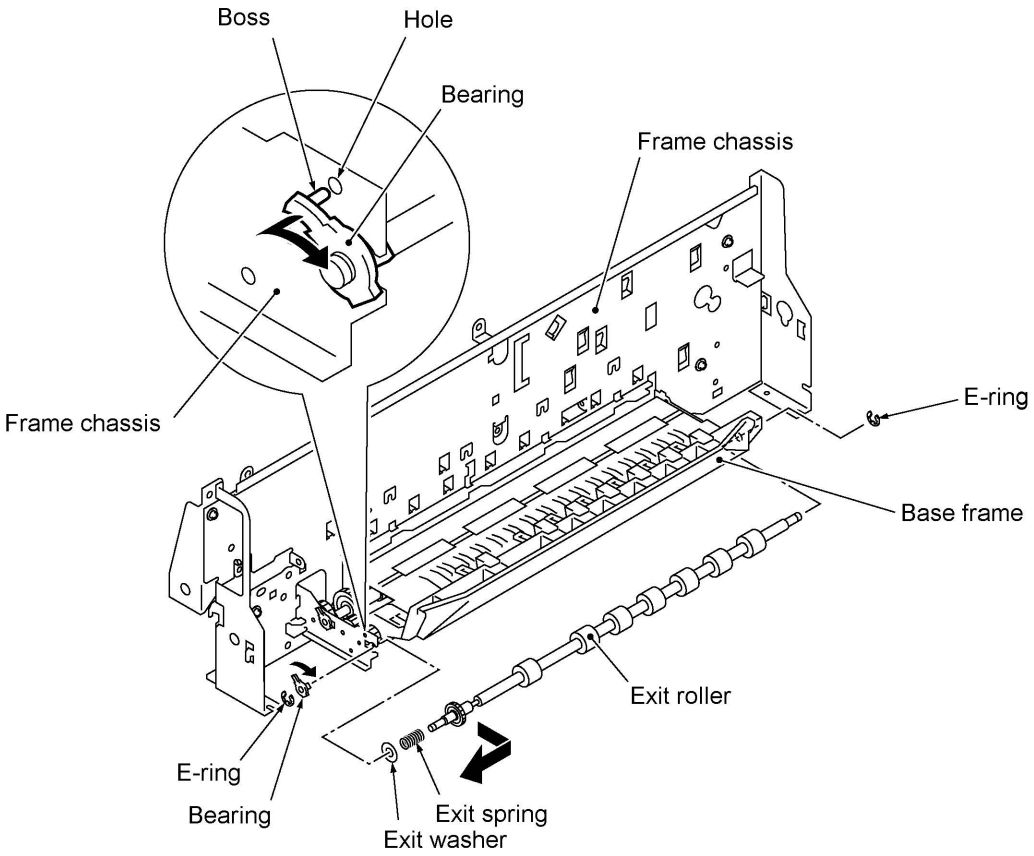

(4) Remove the two screws from the bottom of the base frame.

(5) Push up the rear end of the base frame to unhook it and then pull out the base frame to the front.

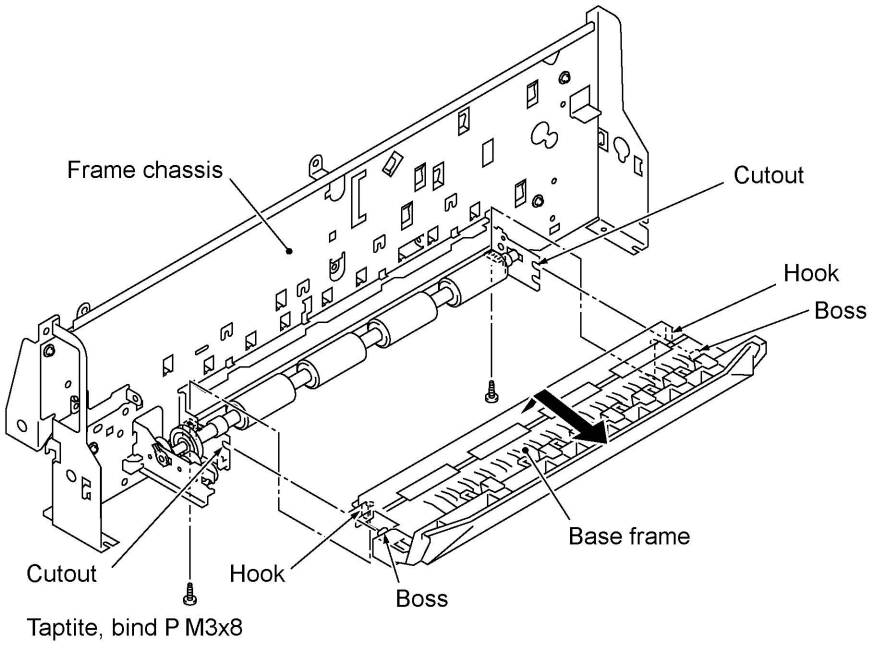

1.31 Large Feed Roller ASSY

(1) At each of the right and left ends of the large feed roller shaft, pull the arm of the bearing outwards, turn it clockwise (when viewed from the left), and pull it out.

NOTE: These bearings may be glued to the frame chassis and gear plate, so you need to remove the glue.

(2) Push the large feed roller ASSY to the right and take it up and out of the frame chassis.

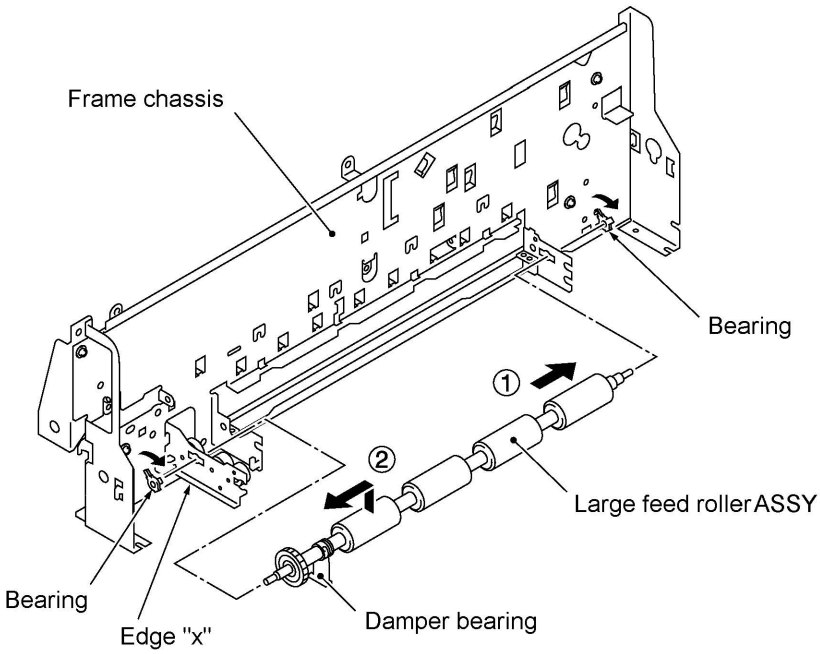

■ Reassembling Notes

- When setting the bearings to the frame chassis back into place or replacing them with new ones, no gluing is required.
- After setting the large feed roller ASSY to the frame chassis, make sure that the bottom end of the damper bearing is fitted on edge "x" of the frame chassis.

1.32 Gear Plate ASSY

(1) Remove the two screws.

(2) Slightly pull the gear plate ASSY to the right to unhook it from the tab of the frame chassis, and then remove it to the rear.

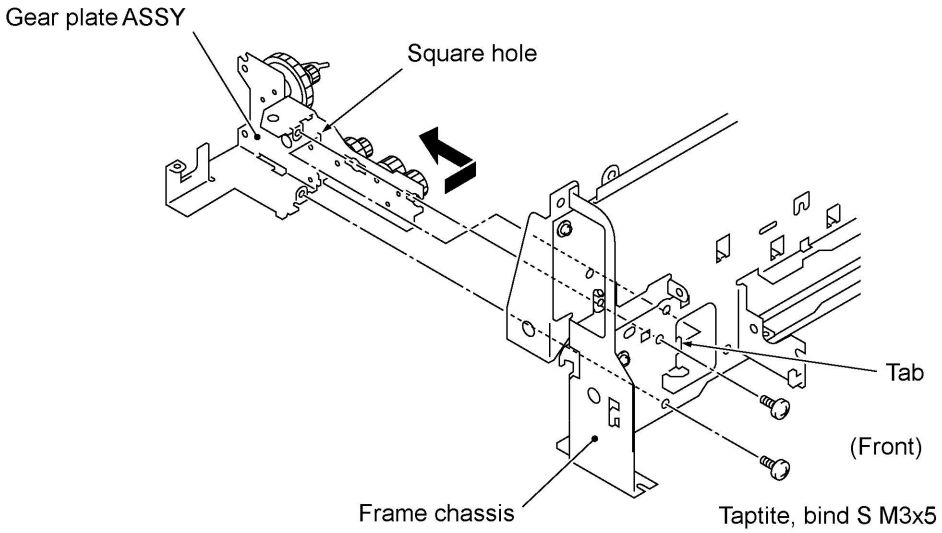

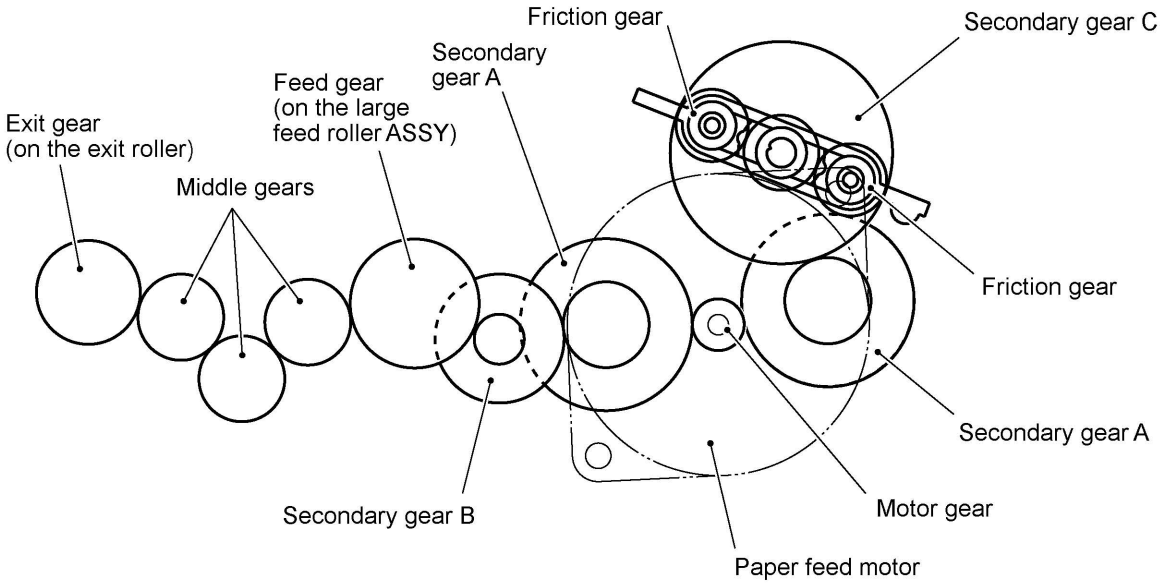

1.33 Ink Foam

(1) Take up the ink foam from the lower cover.

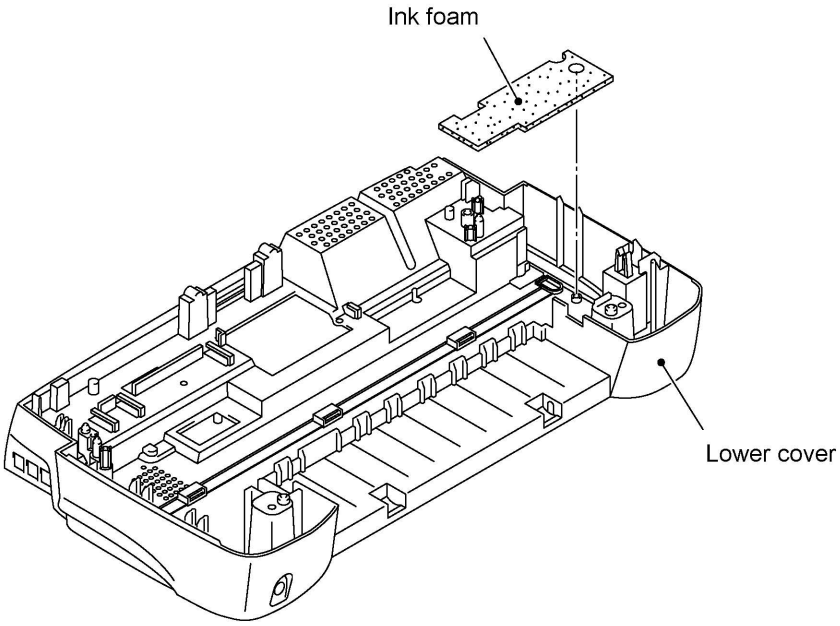

1.34 Harness Routing

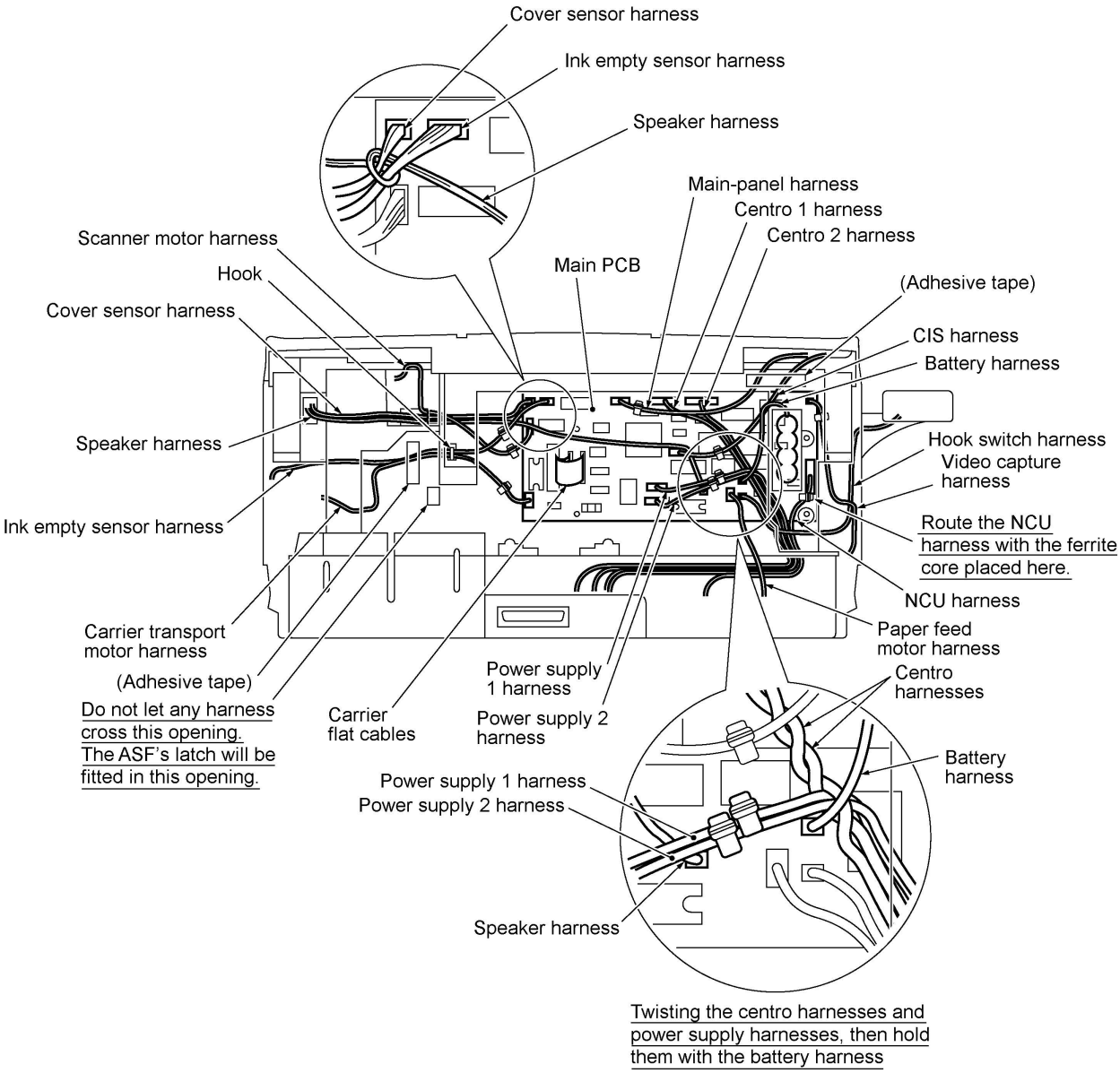

2. LUBRICATION

Apply the specified lubricants to the lubrication points as shown below.

Lubricant type (Manufacturer)	Lubricant amount			
	Thin coat of grease (1 mm^3)	Half of a rice-sized pinch of grease (3 mm^3)	Rice-sized pinch of grease (6 mm^3)	Bean-sized pinch of grease (12 mm^3)
Molykote EM-30LG or EM-30L (Dow Corning)	———	(EM0.5)	(EM1)	(EM2)
Molykote EM-D110 (Dow Corning)	———	———	(EMD1)	———
NYE NYOGEL 744 (William F. Nye Company)	———	(NY0.5)	(NY1)	(NY2)

[1] Document feed roller ASSY and document ejection roller ASSY

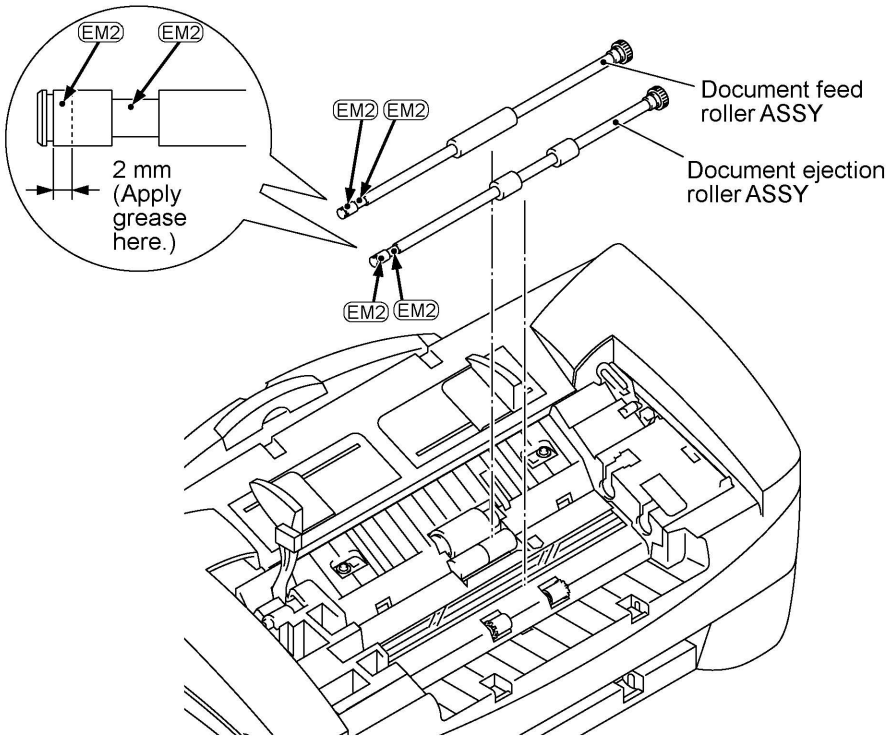

[2] Control panel locks

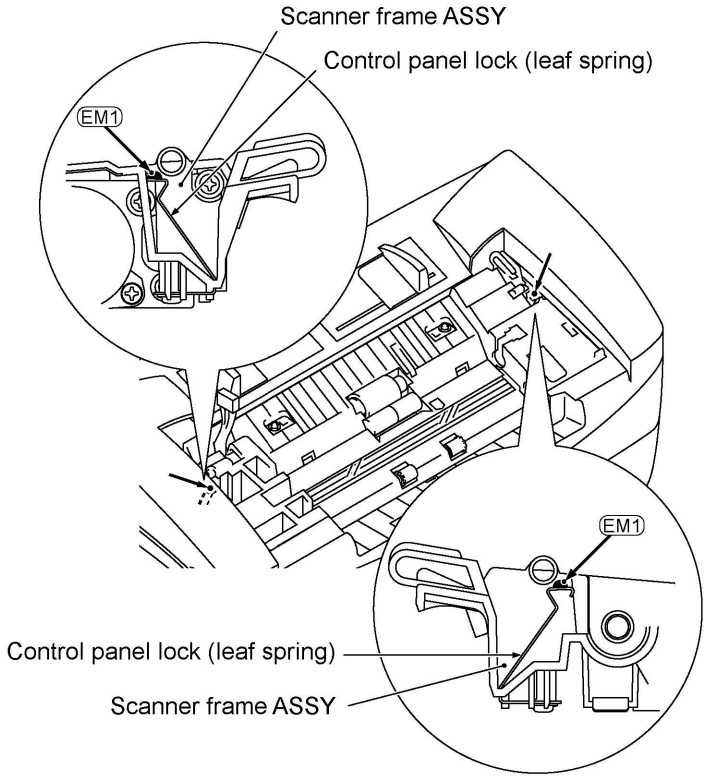

[3] Scanner frame ASSY and separation roller gear

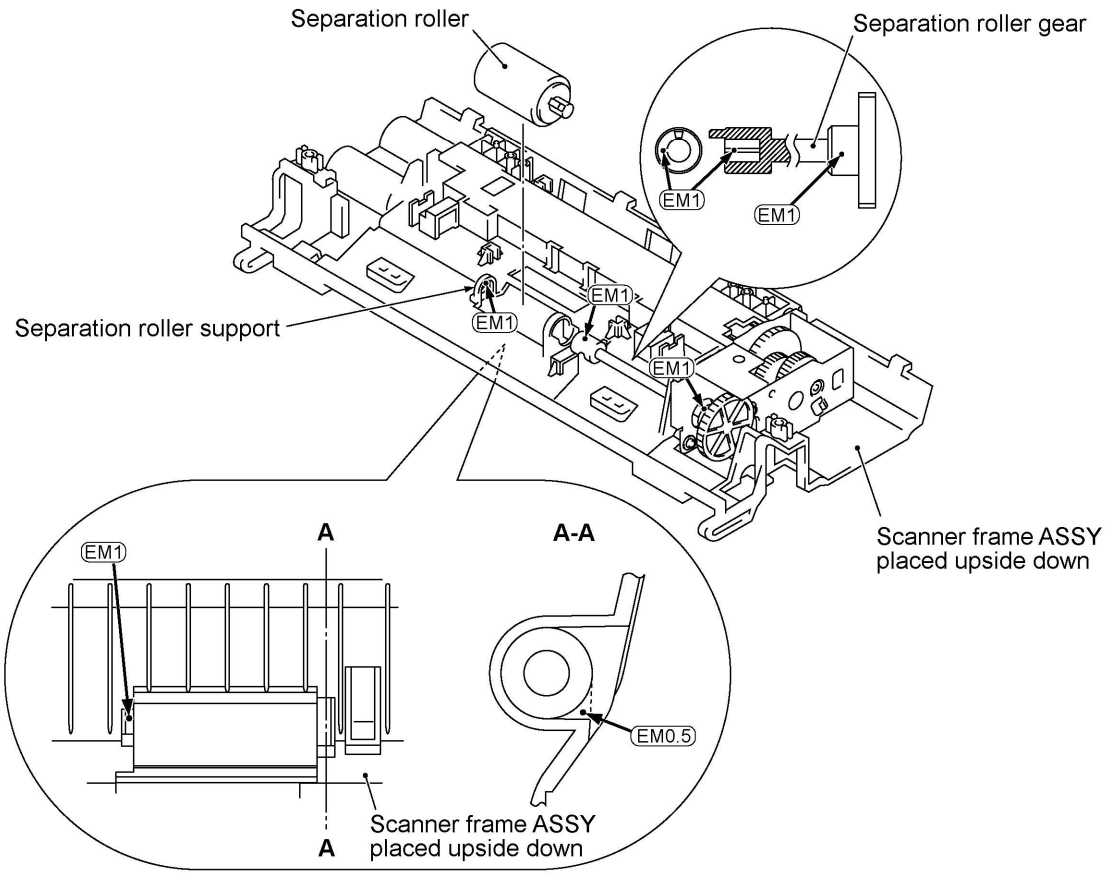

[4] Top cover lock spring

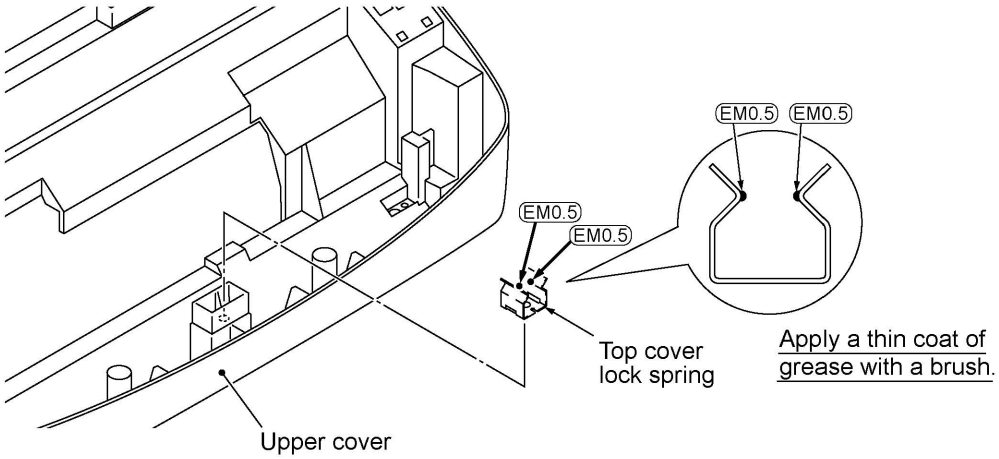

[5] Gear plate ASSY

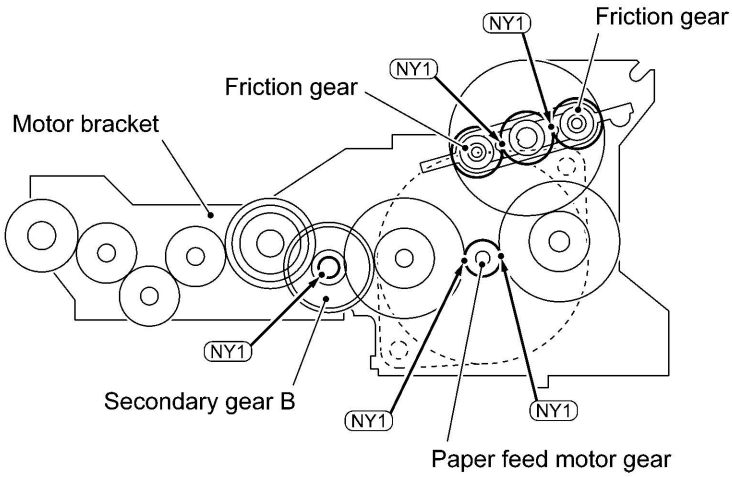

[6] Hinges

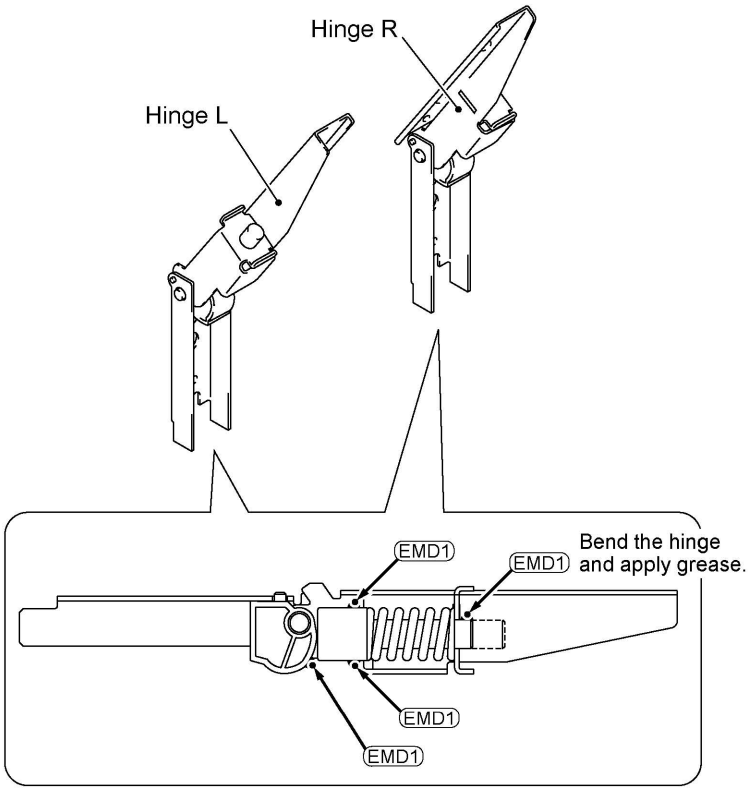

[7] Frame chassis ASSY

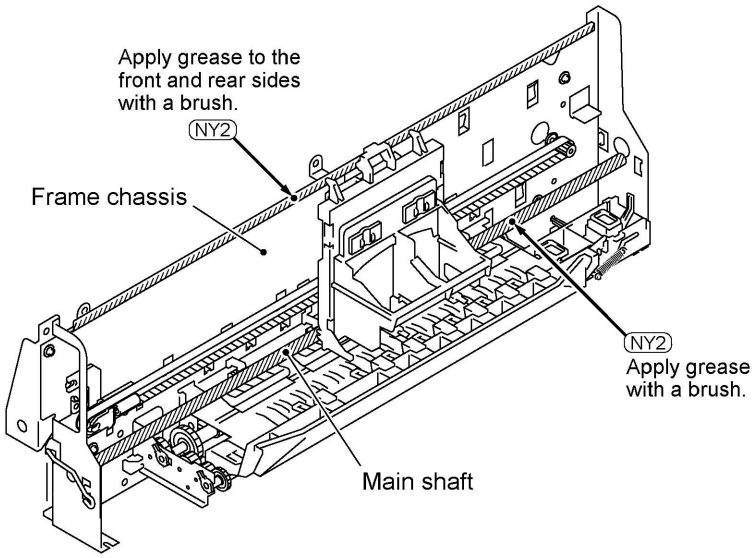

[8] Idle pulley holder

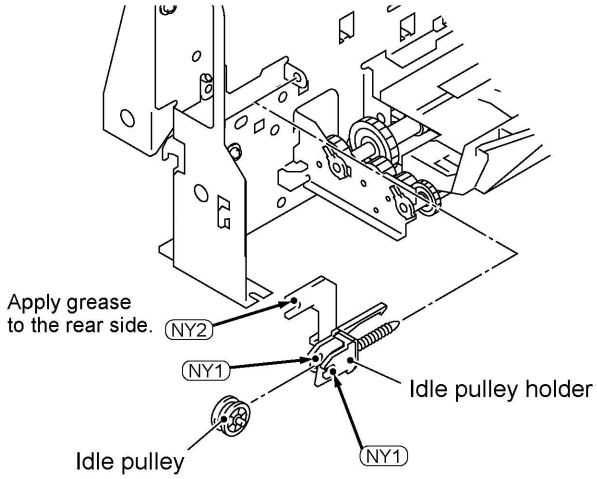

[9] Maintenance ASSY

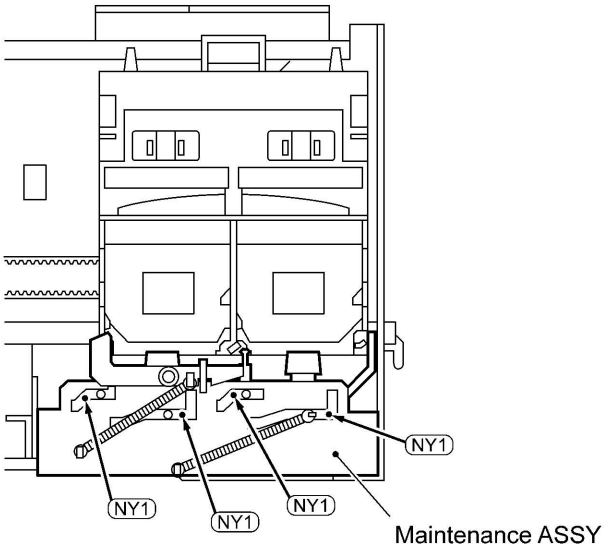

[10] Exit roller ASSY

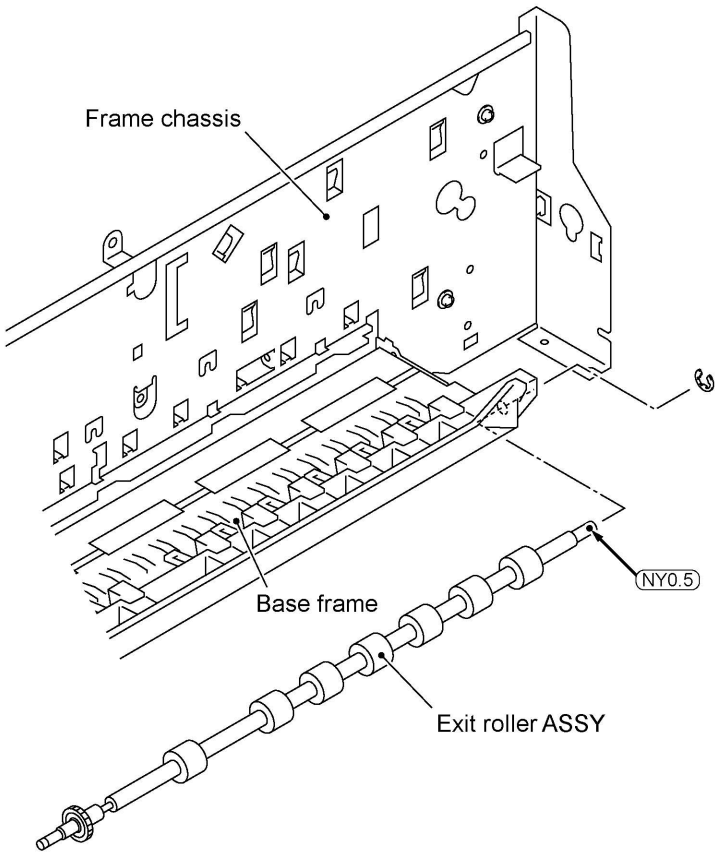

[11] Large feed roller ASSY

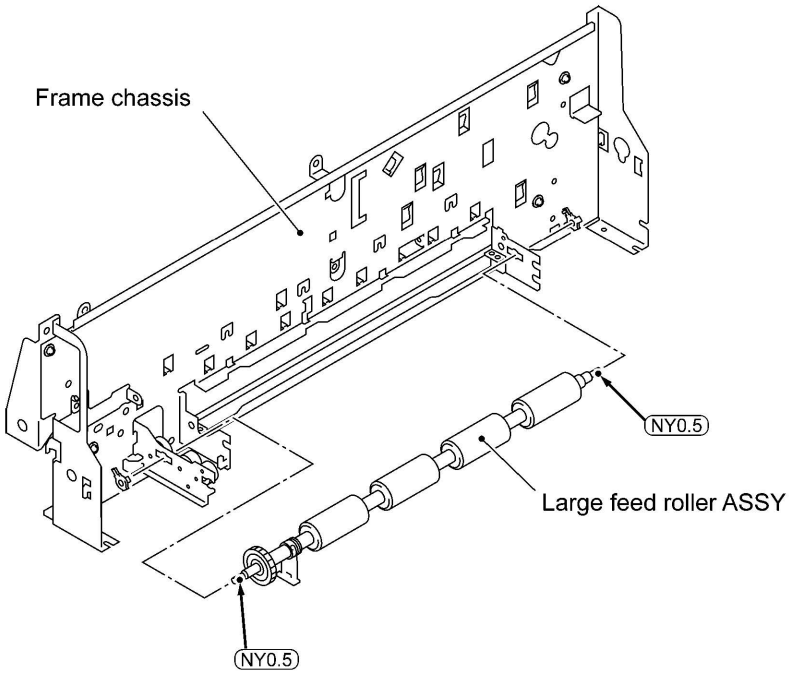

CONTENTS

1. ENTRY INTO THE MAINTENANCE MODE V-1

2. LIST OF MAINTENANCE-MODE FUNCTIONS V-2

3. DETAILED DESCRIPTION OF MAINTENANCE-MODE FUNCTIONS V-4

- 3.1 EEPROM Parameter Initialization V-4
- 3.2 Printout of Scanning Compensation Data V-5
- 3.3 Firmware Switch Setting V-7
- 3.4 Operational Check of Control Panel PCB V-18
- 3.5 Sensor Operational Check V-19
- 3.6 EEPROM Customizing V-20
- 3.7 Ink Dot Counter Initialization V-20

1. ENTRY INTO THE MAINTENANCE MODE

To make the facsimile equipment enter the maintenance mode, press the **Function**, *, **2**, **8**, **6**, and **4** keys in this order.

|← Within 2 seconds→|

The equipment beeps for approx. one second and displays "▮▮ MAINTENANCE ▮▮▮" on the LCD, indicating that it is placed in the initial stage of the maintenance mode, a mode in which the equipment is ready to accept entry from the keys.

To select one of the maintenance-mode functions listed in Section 2, enter the corresponding 2-digit function code with the numerical keys on the control panel. (The details of each maintenance-mode function are described in Section 3.)

NOTES:
- Pressing the **9** key twice in the initial stage of the maintenance mode makes the equipment exit from the maintenance mode, restoring it to the standby state.
- Pressing the **Stop** key after entering only one digit restores the equipment to the initial stage of the maintenance mode.
- If an invalid function code is entered, the equipment resumes the initial stage of the maintenance mode.

2. LIST OF MAINTENANCE-MODE FUNCTIONS

Maintenance-mode Functions

Function Code	Function	Reference Subsection (Page)
01	EEPROM Parameter Initialization	3.1 (V-4)
05	Printout of Scanning Compensation Data	3.2 (V-5)
10	Firmware Switch Setting	3.3 (V-7)
13	Operational Check of Control Panel PCB (Check of Keys and Buttons)	3.4 (V-18)
32	Sensor Operational Check	3.5 (V-19)
74	EEPROM Customizing	3.6 (V-20)
81	Ink Dot Counter Initialization	3.7 (V-20)
91	EEPROM Parameter Initialization (except the telephone number storage area)	3.1 (V-4)
99	Exit from the Maintenance Mode	---- (V-1)

* ADF: Automatic document feeder

---------- **IMPORTANT** ----------

Basically, the maintenance-mode functions listed on the previous page should be accessed by service personnel only. However, you may allow end users to access some of these under the guidance of service personnel (e.g., by telephone).

The user-accessible functions (codes 10 and 91) are shaded in the table given on the previous page. Function code 10 accesses the firmware switches WSW01 to WSW36, each of which has eight selectors. You should not allow end users to access all of those selectors, but you may allow them to access user-accessible selectors which are shaded in the firmware switch tables in Subsection 3.3.

The service personnel should instruct end users to follow the procedure given below.

(1) Press the **Function** and **Mode** keys in this order.
The LCD clears the current display.
NOTE: The **Mode** key is inoperable during standby for redialing and timer.

(2) Press the **0** key.

(3) Enter the desired function code (10 or 91) with the numerical keys.
For function code 10, access the desired firmware switch according to the operating procedure described in Subsection 3.3.

(4) To make the equipment return to the standby state, press the **Stop** key.

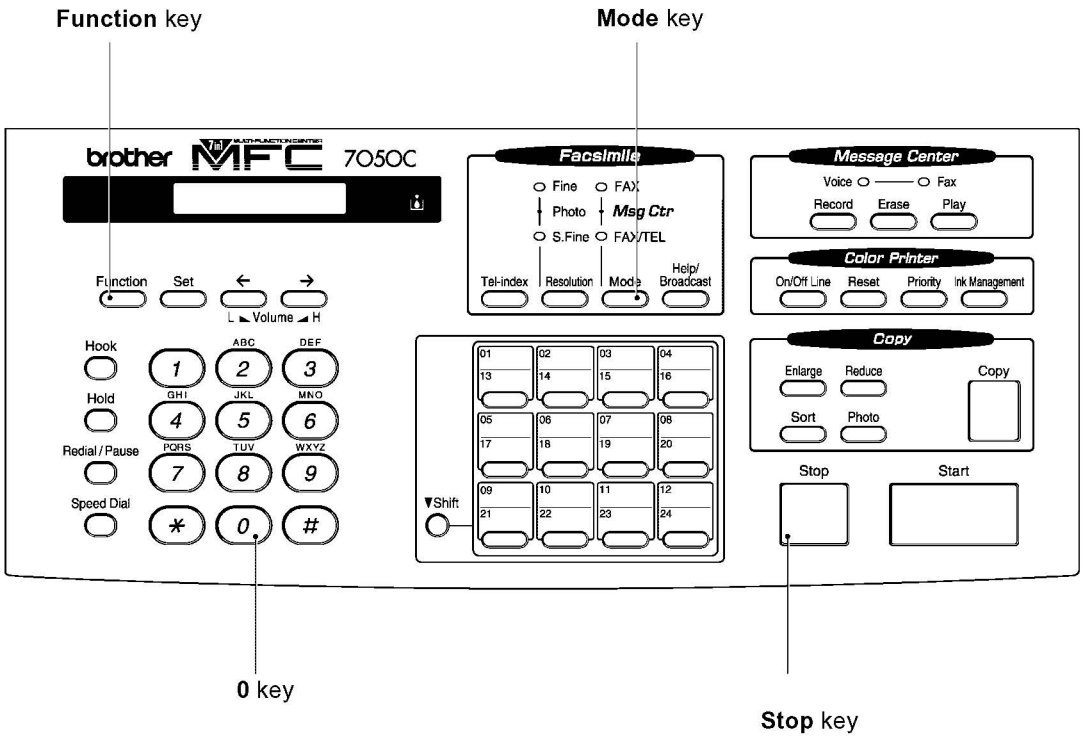

3. DETAILED DESCRIPTION OF MAINTENANCE-MODE FUNCTIONS

3.1 EEPROM Parameter Initialization

■ Function

The equipment initializes the parameters, user switches, and firmware switches registered in the EEPROM, to the initial values. Entering the function code 01 initializes almost all of the EEPROM areas, but entering 91 does not initialize some areas, as listed below.

<table>
<tr><th>Data item \ Function code</th><th>01</th><th>91</th></tr>
<tr><td>Maintenance-mode functions
User switches
Firmware switches
Remote activation code</td><td rowspan="2">All of these will be initialized</td><td>These will be initialized</td></tr>
<tr><td>Telephone function registration
Station ID data
One-touch dialing
Speed dialing
Group dialing</td><td>These will <u>not</u> be initialized</td></tr>
<tr><td>EEPROM customizing code (4-digit)</td><td colspan="2">This will <u>not</u> be initialized.
(Note that the first digit of the 4-digit code will be initialized to "0." If the code is <u>1</u>001, for example, it will be initialized to <u>0</u>001.)</td></tr>
</table>

NOTE: If you replace the main PCB with one used for other facsimile equipment, carry out this procedure and then customize the EEPROM (maintenance-mode function code 74 in Section 3.6).

■ Operating Procedure

(1) Press the **0** and **1** keys (or the **9** and **1** keys according to your need) in this order in the initial stage of the maintenance mode.

The "PARAMETER INIT" will appear on the LCD.

(2) Upon completion of parameter initialization, the equipment returns to the initial stage of the maintenance mode.

3.2 Printout of Scanning Compensation Data

■ Function

The equipment prints out the white and black level data for scanning compensation.

■ Operating Procedure

Do not start this function merely after powering on the equipment but start it after carrying out a sequence of scanning operation. Unless the equipment has carried out any scanning operation, this function cannot print out correct scanning compensation data. This is because at the start of scanning operation, the equipment initializes white and black level data and takes in the scanning compensation reference data.

(1) Press the **0** and **5** keys in this order in the initial stage of the maintenance mode.

The "WHITE LEVEL 1" will appear on the LCD. Then “PRINTING” will appear.

(2) The equipment prints out the scanning compensation data list containing the following:

a) 2-value quantization white level data (1728 bytes)
b) 2-value quantization black level data (1 byte)
c) LED light intensity value, 2-value quantization LED light intensity value (1 byte)
d) 2-value quantization A/D-high value (1 byte)
e) Compensation data for background color (1 byte)

(3) Upon completion of recording of the compensation data list, the equipment returns to the initial stage of the maintenance mode.

NOTE: When the equipment prints monochrome images after monochrome scanning, only the green data is valid.

NOTE: If any data is abnormal, its code will be printed with asterisk on the left side, as shown on the next page. In the first and last row, however, you can ignore the asterisks since they show the data for beyond left and right margins.

WHITE LEVEL DATA

```
*0C B3 B2 B1 DE E8 E9 EB EA EC ED ED ED ED EE EE EE EF EF EF EF ED EE EF F0 F0 F1 F0 F3 F3 F3 F3
 F3 F5 F4 F5 F4 F3 F4 F3 F3 F3 F3 F2 F5 F6 F6 F7 F7 F6 F6 F6 F7 F6 F6 F6 F7 F8 F7 F8 F8 F8
 F9 F7 F8 F8 F8 F9 F9 F9 F9 F8 FA F9 F9 F9 F9 F9 FA F9 FA FA FA FB FA FC FB FA FB F9 FA FA F9 F9
 F9 F6 F6 F4 F7 F6 F6 F6 F6 F7 F8 F7 F6 F7 F7 F7 F6 F7 F8 F7 F7 F4 F5 F5 F6 F7 F5 F5 F5 F5 F6 F5
 F5 F5 F5 F7 F7 F7 F7 F8 F8 F8 F7 F8 F8 F7 F8 F6 F7 F7 F7 F8 F6 F7 F6 F6 F8 F6 F6 F6 F5 F6 F5 F6
 F6 F6 F6 F7 F6 F6 F6 F6 F7 F5 F6 F5 F5 F6 F5 F5 F5 F4 F6 F4 F4 F4 F5 F6 F4 F3 F3 F3 F5 F4 F4 F4
 F5 F3 F4 F2 F3 F3 F3 F4 F2 F4 F4 F3 F4 F2 F3 F2 F1 F4 F2 F2 F2 F1 F2 F2 F2 F2 F1 F1 F1 F0 F1 F1
 F1 F2 F1 F3 F3 F3 F4 F3 F4 F3 F3 F5 F4 F4 F5 F5 F7 F7 F6 F6 F6 F8 F7 F6 F6 F5 F6 F6 F4 F4 F3 F3
 F4 F2 F2 F2 F4 F2 F3 F3 F2 F4 F3 F3 F3 F4 F5 F3 F4 F4 F5 F5 F3 F4 F3 F3 F3 F4 F5 F5 F4 F5 F5 F5
 F4 F1 F3 F2 F5 F3 F3 F3 F3 F5 F6 F5 F5 F4 F6 F6 F4 F5 F5 F6 F6 F4 F4 F4 F5 F6 F3 F2 F2 F2 F3 F1
 F1 F1 F1 F3 F3 F3 F3 F3 F5 F4 F2 F2 F2 F3 F4 F2 F3 F3 F3 F4 F2 F2 F1 F2 F3 EF EC BF 85 6C 63*4E
*49 57 70 9E E8 EF F0 F2 F3 F0 EF E3 83 6D 67 69 7A D4 EF F0 EE F0 F1 F3 F0 EF EF EF F1 EF EE EE
 EE EC EE EC ED ED EE EE EC ED EE EE EF EC ED EC ED EE ED EB EA E6 C9 85 A6 78 59 54 5A 58 5D 5A
 55*4E 5A 58 5C*4F*4E*49*3E*35*39*33*35*36*48 5C 74 97 D9 EA EB EE EE ED EE EF F1 F0 EF EF EF F0
 F0 EE EE EE EF EF ED ED ED ED EF EE ED ED EC EE EE ED ED ED EF EE ED ED EC EE EE EC EC EA EA E1
 8E 59*47*3F 51 64 74 CC E8 EC ED ED ED EC EF EE ED EE ED EF EE E6 93 60*48*3C*36*2A*34*2C*2D*2B
*30*2E*43*4C 95 57 52 51 5E*44*3B*36*3C*49 5D 6A 7B D7 ED F0 ED ED EC D8 7A 55*45*3B*43*4A 69 74
 C6 EC F0 F0 F0 F0 F1 F3 F3 F1 F2 F1 F2 F2 F0 F1 F1 F2 F3 F1 F0 F0 F1 F2 F0 EF EF EF F0 F0 EE EE
 EE EF EF EF EF EF F0 F1 EF F0 F1 F1 F2 F1 F1 F0 F1 F2 F1 F1 F0 F0 F1 F1 F1 F2 F1 F2 F2 F1 F1 F1
 F3 F3 F2 F3 F4 F5 F6 F4 F4 F3 F5 F6 F4 F5 F5 F5 F7 F6 F6 F6 F6 F7 F6 F5 F5 F4 F6 F6 F4 F4 F4 F6
 F6 F4 F5 F5 F6 F7 F6 F6 F6 F6 F8 F6 F6 F6 F6 F8 F7 F5 F5 F5 F7 F7 F6 F6 F5 F7 F7 F6 F5 F5 F6 F7
 F5 F3 F4 F6 F8 F7 F6 F5 F6 F6 F9 F7 F6 F6 F6 F8 F7 F5 F5 F5 F7 F7 F5 F4 F4 F6 F8 F8 F5 F4 F5 F5
 F4 F2 F3 F5 F7 F4 F4 F3 F5 F8 F7 F6 F6 F6 F8 F7 F5 F6 F7 F8 F7 F5 F5 F5 F9 F8 F5 F5 F5 F7 F8 F6
 F5 F5 F7 F8 F6 F6 F6 F7 F8 F6 F5 F5 F6 F8 F8 F7 F7 F7 F8 F8 F6 F6 F5 F7 F7 F5 F4 F5 F6 F7 F5 F5
 F6 F7 F8 F7 F7 F7 F8 F9 F8 F7 F7 F7 F9 F8 F6 F6 F6 F9 F9 F7 F7 F7 FA FB F7 F7 F7 F7 F8 F9 F8 F7 F7
 F8 F7 F8 F7 F8 F8 F9 F8 F7 F7 F9 FA F9 F7 F7 F6 F8 F9 F7 F7 F6 F7 F7 F5 F5 F5 F6 F6 F5 F4 F5 F5
 F6 F5 F5 F5 F5 F7 F7 F6 F6 F5 F6 F7 F5 F6 F6 F9 F9 F7 F8 F7 F8 FA F8 F8 F8 F8 F8 F8 F8 F8 F8 F9
 F8 F8 F8 F8 FA F8 F8 F8 F7 F9 F9 F7 F7 F6 F7 F8 F6 F6 F6 F6 F7 F4 F5 F4 F4 F5 F4 F3 F2 F2 F5 F5
 F3 F2 F3 F6 F7 F5 F5 F5 F7 F8 F7 F7 F7 F8 F9 F7 F7 F8 F9 FA F8 F8 F7 F8 FB FA F8 F8 F8 F9 F8 F8
 F9 F8 FA FA F9 F9 F9 FA FA F7 F7 F7 F8 FA F8 F8 F8 F8 FA F9 F7 F8 F7 F8 F7 F6 F6 F6 F8 F7 F6 F7
 F7 F8 F9 F8 F8 F8 FA FB F9 F9 FA FA FC F9 F9 FA FA FC FB FB FB FA FD FD FB FB FB FC FC FB FB FA
 FB FB FA FB FC FB FB FA F9 FA FB FC FA FA FA FA FB FB FB FA FA FA FA F9 FA FA FA FA F9 F9 F9 F9
 FA F8 F9 FA FA FB FA FB FA F9 FB FA FA FA FB FD FD FB FC FB FD FD FB FB FB FC FE FC FC FC FC FE
 FC FC FC FC FE FC FC FC FB FD FD FB FB FA FB FB FA FA FA FB FB F9 FB FB FA FB F9 F9 FA FB FA
 F9 F8 F8 FA FA F9 F9 F9 FA FB FB FB FA FB FC F9 FB FA FC FD FB FA FA FA FD FA FA FA FA FC FB FB
 FB FA FC FC FB FA FA FC FC F9 FA FA FA FB FA FA FA FA FC FB FB FB FB FD FC FC FC FA FB FA F9 F9
 F8 F9 F9 F7 F7 F6 F6 F7 F5 F5 F5 F4 F5 F3 F3 F3 F2 F3 F1 EF D5 C5 C7 C5 C3 B0 88 5D*4D*42*3E*3C
```

BLACK LEVEL = 0D

LED PWM VALUE = AA

A/D REFERENCE = 0F

BGC LEVEL = 40

Scanning Compensation Data List

3.3 Firmware Switch Setting

■ Function

The facsimile equipment incorporates the following firmware switch functions (WSW01 through WSW36) which may be activated with the procedures using the control panel keys and buttons.
The firmware switches have been set at the factory in conformity to the communications standards and codes of each country. Do not disturb them unless necessary. Some firmware switches may not be applicable in some versions. The firmware switch data list indicates "Not used." for those inapplicable switches.

Firmware Switches (WSW01 through WSW36)

WSW No.	Function	Reference Page
WSW01	Not used.	
WSW02		
WSW03		
WSW04		
WSW05	1st dial tone and busy tone detection	V-9
WSW06	**Pause** key setting	V-9
WSW07	Not used.	
WSW08		
WSW09		
WSW10		
WSW11		
WSW12	Signal detection condition setting	V-10
WSW13	Modem setting	V-11
WSW14	AUTO ANS facility setting	V-12
WSW15	Not used.	
WSW16		
WSW17		
WSW18		
WSW19		
WSW20	Overseas communications mode setting	V-13
WSW21	TAD setting	V-14
WSW22	ECM setting	V-14
WSW23	Communications setting	V-15
WSW24	Not used.	
WSW25		
WSW26	Function setting 1	V-15
WSW27	Not used.	
WSW28		
WSW29		
WSW30	Function setting 2	V-16
WSW31	Not used.	
WSW32		
WSW33		
WSW34		
WSW35	Function setting 3	V-17
WSW36	Function setting 4	V-17

■ Operating Procedure

(1) Press the **1** and **0** keys in this order in the initial stage of the maintenance mode.

The equipment displays the "WSW00" on the LCD and becomes ready to accept a firmware switch number.

(2) Enter the desired number from the firmware switch numbers (01 through 36).

The following appears on the LCD:

WSWXX = 0 0 0 0 0 0 0 0

(3) Use the ◀ and ▶ keys to move the cursor to the selector position to be modified.

(4) Enter the desired number using the **0** and **1** keys.

(5) Press the **Set** key. This operation saves the newly entered selector values onto the EEPROM and readies the equipment for accepting a firmware switch number.

(6) Repeat steps (2) through (5) until the modification for the desired firmware switches is completed.

(7) Press the **Set** or **Stop** key to return the equipment to the initial stage of the maintenance mode.

NOTES:
- To cancel this operation and return the equipment to the initial stage of the maintenance mode during the above procedure, press the **Stop** key.
- If there is a pause of more than one minute after a single-digit number is entered for double-digit firmware switch numbers, the equipment will automatically return to the initial stage of the maintenance mode.

■ Note

The user-accessible selectors of the firmware switches are shaded in the tables given on the following pages.

■ Detailed Description for the Firmware Switches

WSW05 (1st dial tone and busy tone detection)

Selector No.	Function	Setting and Specifications
1 | 4	Not used.	
5 6	Busy tone detection in automatic sending mode	No. 5 6 0 0 : No detection 0 1 : Detection only after dialing 1 0 : No detection 1 1 : Detection before and after dialing
7 8	Not used.	

- **Selectors 5 and 6: Busy tone detection in automatic sending mode**

  These selectors determine whether or not the equipment automatically disconnects a line upon detection of a busy tone in automatic sending mode.

  Setting selector 6 to "0" ignores a busy tone so that the equipment does not disconnect the line.

  Setting selectors 5 and 6 to "0" and "1," respectively, makes the equipment detect a busy tone only after dialing and disconnect the line.

  Setting both of selectors 5 and 6 to "1" makes the equipment detect a busy tone before and after dialing and then disconnect the line.

WSW06 (Pause key setting)

Selector No.	Function	Setting and Specifications
1 | 3	**Pause** key setting	No. 1 2 3 0 0 0 : No pause 0 0 1 : 3.5 sec. WAIT 0 1 0 : 7 sec. WAIT 0 1 1 : 10.5 sec. WAIT 1 0 0 : 14 sec. WAIT 1 1 0 : 1 0 1 : 3.5 sec. WAIT 1 1 1 :
4 | 8	Not used.	

NOTE: If the **Pause** key is pressed repeatedly, the equipment inserts the specified WAIT multiplied by the number of depressions. It applies also in hook-up dialing.

WSW12 (Signal detection condition setting)

Selector No.	Function	Setting and Specifications
1 2	Min. OFF time length of calling signal (Ci)	No. 1 2 0 0 : 300 ms (in the U.S.A. and Canadian versions) 0 1 : 500 ms 1 0 : 700 ms 1 1 : 900 ms
3 4	Max. OFF time length of calling signal (Ci)	No. 3 4 0 0 : 6 sec. 0 1 : 7 sec. 1 0 : 9 sec. 1 1 : 11 sec.
5 6	Detecting time setting	No. 5 6 0 0 : 800 ms 0 1 : 200 ms 1 0 : 250 ms 1 1 : 150 ms
7 8	Not used.	

- **Selectors 1 through 4: Min. and max. OFF time length of calling signal (Ci)**

  If the equipment detects the OFF state of calling signal (Ci) for a time length which is greater than the value set by selectors 1 and 2 and less than the value set by selectors 3 and 4, it interprets the Ci signal as OFF.

- **Selectors 5 and 6: Detecting time setting**

  These selectors set the time length required to make the equipment acknowledge itself to be called. That is, if the equipment continuously detects calling signals with the frequency set by selectors 1 through 4 of WSW14 during the time length set by these selectors 5 and 6, it acknowledges the call.

WSW13 (Modem setting)

Selector No.	Function	Setting and Specifications
1 2	Cable equalizer	No. 1 2 0 0 : 0 km 0 1 : 0 km 1 0 : 7.2 km 1 1 : 7.2 km
3 4	Reception level	No. 3 4 0 0 : -43 dBm 0 1 : -47 dBm 1 0 : -49 dBm 1 1 : -51 dBm
5 | 8	Modem attenuator	0: 0 dB 1: 8 dB 0: 0 dB 1: 4 dB 0: 0 dB 1: 2 dB 0: 0 dB 1: 1 dB

The modem should be adjusted according to the user's line conditions.

- **Selectors 1 and 2: Cable equalizer**

  These selectors are used to improve the pass-band characteristics of analogue signals on a line. (Attenuation in the high-band frequency is greater than in the low-band frequency.)

  Set these selectors according to the distance from the telephone switchboard to the facsimile equipment.

- **Selectors 3 and 4: Reception level**

  These selectors set the optimum receive signal level.

- **Selectors 5 through 8: Modem attenuator**

  These selectors are used to adjust the transmitting level of the modem when the reception level at the remote station is improper due to line loss. This function applies for G3 protocol signals.

  Setting two or more selectors to "1" produces addition of attenuation assigned to each selector.

WSW14 (AUTO ANS facility setting)

Selector No.	Function	Setting and Specifications
1 2	Frequency band selection (Lower limit)	No. 1 2 0 0 : 13 Hz 0 1 : 15 Hz 1 0 : 23 Hz 1 1 : 20 Hz
3 4	Frequency band selection (Upper limit)	No. 3 4 0 0 : 30 Hz 0 1 : 55 Hz 1 X : 70 Hz
5 | 8	Not used.	

- **Selectors 1 through 4: Frequency band selection**

  These selectors are used to select the frequency band of calling signals for activating the AUTO ANS facility.

WSW20 (Overseas communications mode setting)

Selector No.	Function	Setting and Specifications
1	Not used.	
2	Overseas communications mode (Reception)	0: 2100 Hz 1: 1100 Hz
3	Overseas communications mode (Transmission)	0: OFF 1: Ignores DIS once.
4 | 8	Not used.	

- **Selectors 2 and 3: Overseas communications mode**

  These selectors should be used if the facsimile equipment malfunctions in overseas communications. According to the communications error state, select the signal specifications.

  Setting selector 2 to "1" allows the equipment to use 1100 Hz CED signal instead of 2100 Hz in receiving operation. This prevents malfunctions resulting from echoes, since the 1100 Hz signal does not disable the echo suppressor (ES) while the 2100 Hz signal does.

  Setting selector 3 to "1" allows the equipment to ignore a DIS signal sent from the called station once in sending operation. This operation suppresses echoes since the first DIS signal immediately follows a 2100 Hz CED (which disables the ES) so that it is likely to be affected by echoes in the disabled ES state. However, such a disabled ES state will be removed soon so that the second and the following DIS signals are not susceptible to data distortion due to echoes. Note that some models when called may cause error by receiving a self-outputted DIS.

WSW21 (TAD setting)

Selector No.	Function	Setting and Specifications
1 | 5	Max. waiting time for voice signal	No. 1 2 3 4 5 0 0 0 0 0 : No detection 0 0 0 0 1 : 1 sec. 0 0 0 1 0 : 2 sec. 0 0 0 1 1 : 3 sec. | | | | | | 0 1 0 0 0 : 8 sec. | | | | | | 1 1 1 1 1 : 31 sec.
6 | 8	Not used.	

NOTE: Selectors 1 through 8 are applicable to those models equipped with a built-in TAD.

- **Selectors 1 through 5: Max. waiting time for voice signal**

  In the TAD mode, the equipment waits for voice signal for the time length specified by these selectors before it automatically shifts to the facsimile message receive mode or disconnects the line.

WSW22 (ECM setting)

Selector No.	Function	Setting and Specifications
1	ECM* in sending and receiving	0: ON 1: OFF
2 | 8	Not used.	

* ECM: Error correction mode

WSW23 (Communications setting)

Selector No.	Function	Setting and Specifications
1	Starting point of training check (TCF)	0: From the head of a series of zeros 1: From any arbitrary point
2 | 8	Not used.	

- **Selector 1: Starting point of training check (TCF)**

  At the training phase of receiving operation, the called station detects for 1.0 second a training check (TCF) command, a series of zeros which is sent from the calling station for 1.5 seconds to verify training and give the first indication of the acceptability of the line.

  This selector sets the starting point from which the called station should start counting those zeros. If this selector is set to "0," the called station starts counting zeros 100 ms after the head of a series of zeros is detected.

  If it is set to "1," the called station starts counting zeros upon detection of 10-ms successive zeros 50 ms after the head of a series of zeros is detected. In this case, if the detection of 10-ms successive zeros is too late, the data counting period will become less than 1.0 second, making the called station judge the line condition unacceptable.

WSW26 (Function setting 1)

Selector No.	Function	Setting and Specifications
1 | 5	Not used.	
6 7	No. of CNG cycles to be detected (when the line is connected via the external telephone in the external TAD mode or via the facsimile equipment in F/T mode)	No. 6 7 0 0 : 0.5 (A) 0 1 : 1 (B) 1 0 : 1.5 (C) 1 1 : 2 (D)
8	Not used.	

NOTE: Selectors 6 and 7 are applicable to those models equipped with a built-in TAD.

- **Selectors 6 and 7: No. of CNG cycles to be detected**

  The equipment interprets a CNG as an effective signal if it detects a CNG signal by the number of cycles specified by these selectors when the line is connected via the external telephone in the external TAD mode or via the facsimile equipment in F/T mode.

WSW30 (Function setting 2)

Selector No.	Function	Setting and Specifications
1 | 3	Detection level of dial tone or busy tone for the built-in TAD operation	No. 1 2 3 0 0 0 : -38.0 dBm (A) 0 0 1 : -39.5 dBm (B) 0 1 0 : -41.0 dBm (C) 0 1 1 : -42.5 dBm (D) 1 0 0 : -44.0 dBm (E) 1 0 1 : -45.5 dBm (F) 1 1 0 : -47.0 dBm (G) 1 1 1 : -48.5 dBm (H)
4 | 8	Not used.	

NOTE: Selectors 1 through 3 are applicable to those models equipped with a built-in TAD.

- **Selectors 1 through 3: Detection level of dial tone or busy tone for built-in TAD operation**

  If dial tone or busy tone inputted during ICM recording is below the level specified by these selectors, the TAD stops recording and disconnects the line.

WSW35 (Function setting 3)

Selector No.	Function	Setting and Specifications
1 | 4	Detection time length of the disconnection tone in ICM recording	No. 1 2 3 4 0 0 0 0 : No detection 0 0 0 1 : 1 sec. 0 0 1 0 : 2 sec. 0 1 0 0 : 4 sec. | | 1 1 1 1 : 15 sec.
5 | 8	Not used.	

NOTE: Selectors 1 through 4 are applicable to those models equipped with a built-in TAD.

- **Selectors 1 through 4: Detection time length of the disconnection tone in ICM recording**

  If the equipment detects disconnection tone for the time length set by these selectors, it will disconnect the line.

WSW36 (Function setting 4)

Selector No.	Function	Setting and Specifications
1	ECP mode*	0: ON 1: OFF
2 | 8	Not used.	

*ECP (Enhanced Capabilities Port)

- **Selector 1: ECP mode**

  The ECP mode enhances the normal bidirectional communications between the facsimile equipment and the connected PC for higher transmission speed.

3.4 Operational Check of Control Panel PCB

■ Function

This function allows you to check the control panel PCB for normal operation.

■ Operating Procedure

(1) Press the **1** and **3** keys in this order in the initial stage of the maintenance mode.

The "00 " will appear on the LCD.

(2) Press the keys and buttons in the order designated in the illustration shown below.

The LCD shows the corresponding number in decimal notation each time a key or button is pressed. Check that the displayed number is correct by referring to the illustration below.

If a key or button is pressed out of order, the equipment beeps and displays the "INVALID OPERATE" on the LCD. To return to the status ready to accept key & button entry for operational check, press the **Stop** key.

(3) After the last number key or button is pressed, the equipment beeps and returns to the initial stage of the maintenance mode.

To terminate this operation, press the **Stop** key. The equipment returns to the initial stage of the maintenance mode.

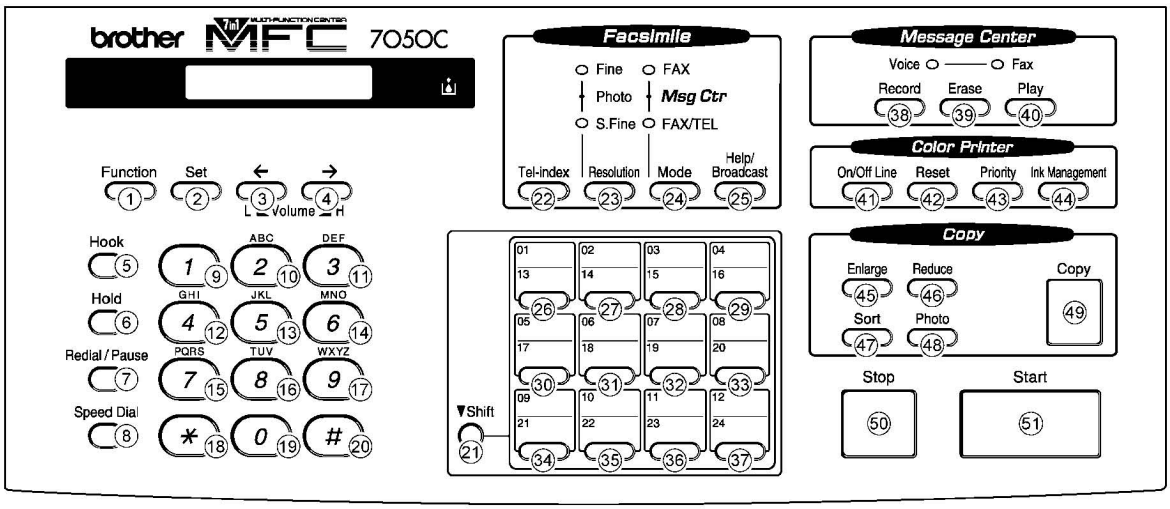

Key & Button Entry Order

3.5 Sensor Operational Check

■ Function

This function allows you to check that the following 13 sensors operate correctly.

- Document front sensor
- Document rear sensor
- Cover sensor
- Registration sensor
- Hook switch
- Carrier home position sensor
- Ink empty sensor

■ Operating Procedure

(1) Press the **3** and **2** keys in this order in the initial stage of the maintenance mode. The equipment sounds 1100 Hz and 400 Hz tones cyclically through the following volumes for testing the speaker:

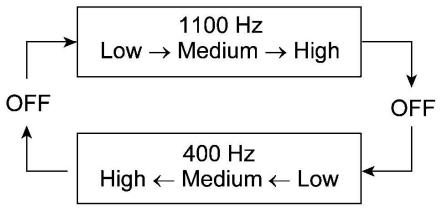

If the sensors are ON as listed below, the LCD will show "FRRECVHKENCREP" which can be switched by pressing the **Start** key.

Given below is the relationship between the LCD indication, sensor name and sensor status.

LCD	Sensors	Sensor signal ON
FR	Document front sensor	No document detected.
RE	Document rear sensor	No document detected.
CV	Cover sensor	Top cover closed.
HK	Hook switch	On-hook state.
EN	Registration sensor	No recording paper detected.
CR	Carrier home position sensor	Carrier placed in the home position.
EP	Ink empty sensor	No reflection light received (since no paper is inserted), which is equivalent to detecting of a printed ink-empty mark.

(2) Change the detecting conditions and check that the displayed letters disappear. For example, insert a document through the document front sensor and check that the "FR" disappears.

(3) To stop this operation and return the equipment to the initial stage of the maintenance mode, press the **Stop** key.

3.6 EEPROM Customizing

■ Function

This function allows you to customize the EEPROM according to language, function settings, and firmware switch settings. The customizing codes list is given in Appendix 1.

NOTE: If you replace the main PCB, be sure to carry out this procedure.

■ Operating Procedure

(1) Press the **7** and **4** keys in this order in the initial stage of the maintenance mode.

The current customizing code (e.g., 1001 in the case of the U.S.A. versions) appears.

(2) Enter the desired customizing code (e.g., 0002 in the case of the Canadian versions).

The newly entered code appears.

NOTE: *If a wrong 4-digit code is entered, the equipment will malfunction.*

(3) Press the **Start** key.

The equipment saves the setting and returns to the initial stage of the maintenance mode.

If you press the **Stop** key or no keys are pressed for one minute in the above procedure, the equipment stops the procedure and returns to the initial stage of the maintenance mode.

3.7 Ink Dot Counter Initialization

■ Function

This function resets the ink dot counters (for black and color ink) to zero and sets the count-up value designed for starter ink cartridges. Accordingly, when the power is first applied after this initialization, the "SET CARTRIDGES" and "PLS OPEN COVER" appear alternately on the LCD.

NOTE: Be sure to carry out this procedure before sending the repaired equipment back to the customer.

■ Operating Procedure

(1) Press the **8** and **1** keys in this order in the initial stage of the maintenance mode.

The LCD shows the "PLEASE POWER OFF."

(2) Unplug the equipment's power cord.

CONTENTS

1. ERROR INDICATION VI-1

2. TROUBLESHOOTING VI-3

2.1 Introduction VI-3

2.2 Precautions VI-3

2.3 Checking prior to Troubleshooting VI-3

2.4 Troubleshooting Procedures VI-5

[1] Control panel related VI-5

[2] Telephone related VI-5

[3] Communications related VI-6

[4] Paper/document feeding related VI-6

[5] Print-image related VI-7

[6] PC-driven or video capture-driven printing VI-10

1. ERROR INDICATION

To help the user or the service personnel promptly locate the cause of a problem (if any), the facsimile equipment incorporates the self-diagnostic functions which display error messages for equipment errors.

If an equipment error occurs, the facsimile equipment emits an audible alarm (continuous beeping) for approximately 4 seconds and shows the error message on the LCD. For the error messages, see below.

Error messages on the LCD

Messages on the LCD	Probable Cause
CHECK PAPER	The registration sensor detects no recording paper loaded in the ASF.
PRINTER JAM	The registration sensor detects that a paper jam has occurred.
COVER OPEN	The cover sensor detects that the top cover is not closed.
DOCUMENT JAM	■ Document jam (1) The document length exceeds the limitation (90 cm). (Both the document front and rear sensors stay ON even after the document has been fed by the registered length.) (2) The document rear sensor detects no trailing edge of a document after the document has been fed by 400 cm. (The document rear sensor stays ON even after the document has been fed when the document front and rear sensors were OFF and ON, respectively.)
	■ Document loading error (1) The document rear sensor detects no leading edge of a document within 10 seconds from the start of document loading operation. (The document rear sensor stays OFF even after the document has been fed when the document front sensor was ON.) (2) The loaded document is too short. (Since the document is shorter than the distance between the document front and rear sensors, the document front sensor is turned OFF before the document rear sensor is turned ON.)

Messages on the LCD	Probable Cause
CLEAN UP SCANNER	In the scanning compensation data list printed by the maintenance-mode function code 05 (refer to Chap. V, Section 3.2), less than fifty percent of the white level data is faulty. (This message may appear only in the maintenance mode)
SCANNER ERROR	In the scanning compensation data list printed by the maintenance-mode function code 05 (refer to Chap. V, Section 3.2), fifty percent or more of the white level data is faulty. (This message may appear only in the maintenance mode)
BLACK NEAR EMPTY PHOTO NEAR EMPTY COLOR NEAR EMPTY	The ink dot counter in the EEPROM on the main PCB has counted up the specified number of dots, meaning near empty of ink. Even if any of these messages is displayed, color printing is still possible.
BLACK INK EMPTY PHOTO INK EMPTY COLOR INK EMPTY	The ink dot counter in the EEPROM on the main PCB has counted up the specified number of dots, meaning that the ink has run out. Once any of these messages is displayed, color printing is no longer possible. (If black ink remains, printing of the received data record or monochrome copying is possible.)
SET CARTRIDGES	This message appears when the power is first applied to the equipment after initialization of the ink dot counter in the EEPROM on the main PCB, prompting the user to set ink cartridges.
PLS OPEN COVER	If this message appears, open and close the top cover. The message may disappear if opening/closing the top cover removes the error.
PC BUSY OR FAIL	After connected with the host computer, the equipment has received no response from the computer. (A communications error has occurred.)

If only an alarm beep is heard without any message on the LCD when the equipment is powered up, the ROM or RAM will be defective.

2. TROUBLESHOOTING

2.1 Introduction

This section gives the service personnel some of the troubleshooting procedures to be followed if an error or malfunction occurs with the facsimile equipment. It is impossible to anticipate all of the possible problems which may occur in future and determine the troubleshooting procedures, so this section covers some sample problems. However, those samples will help service personnel pinpoint and repair other defective elements if he/she analyzes and examines them well.

2.2 Precautions

Be sure to observe the following to prevent the secondary troubles from happening:

(1) Always unplug the AC power cord from the outlet when removing the covers and PCBs, adjusting the mechanisms, or conducting continuity testing with a circuit tester.

(2) When disconnecting the connectors, do not pull the lead wires but hold the connector housings.

(3)
- Before handling the PCBs, touch a metal portion of the machine to discharge static electricity charged in your body.
- When repairing the PCBs, handle them with extra care.

After repairing the defective section, be sure to check again if the repaired section works correctly. Also record the troubleshooting procedure so that it would be of use for future trouble occurrence.

2.3 Checking prior to Troubleshooting

Prior to proceeding to the troubleshooting procedures given in Subsection 2.4, make the following initial checks:

Environmental conditions

Check that:

(1) The machine is placed on a flat, firm surface.

(2) The machine is used in a clean environment at or near normal room temperature (10°C to 35°C) with normal relative humidity (20 to 80%).

(3) The machine is not exposed to direct sunlight or harmful gases.

Power requirements

Check that:

(1) The power supply specified on the rating plate located on the bottom of the machine is used. The supply voltage stays within the rating ±10%.

(2) Each voltage level on AC input lines and DC lines is correct.

(3) All cables and harnesses are firmly connected.

(4) None of the fuses are blown.

Recording paper

Check that:

(1) A recommended type of recording paper is used.

(2) The recording paper is not dampened.

Ink cartridges

(1) Check that both of two ink cartridges are loaded.

2.4 Troubleshooting Procedures

[1] Control panel related

Trouble	Check:
(1) LCD shows nothing.	• Panel-main harness • Control panel PCB • Power supply PCB • Main PCB • Interface PCB • Power supply harnesses (1 and 2), connecting the interface PCB and main PCB with each other
(2) Control panel inoperative.	• Panel-main harness • Control panel PCB • FPC key • Main PCB

[2] Telephone related

Trouble	Check:
(1) No phone call can be made.	• FPC key • Hook switch PCB • Control panel PCB • NCU PCB • Main PCB • NCU harness
(2) Speed dialing or one-touch dialing will not work.	• Ordinary dialing function (other than the speed and one-touch dialing) If it works normally, check the main PCB; if not, refer to item (1) above.
(3) Speaker silent during on-hook dialing.	• Ordinary dialing function (Pick up the handset and press the numerical keys.) If it works normally, proceed to the following checks; if not, refer to item (1) above. • Speaker
(4) Telephone does not ring.	• Speaker • NCU PCB • Main PCB • NCU harness

[3] Communications related

Trouble	Check:
(1) No tone is transmitted.	• Main PCB • NCU PCB • NCU harness

[4] Paper/document feeding related

Trouble	Check:
(1) Neither "COPY: PRESS COPY" nor "FAX: NO. & START" message appears although documents are set.	• Sensors by using the maintenance-mode function code 32. (Refer to Chapter V, Section 3.5.) • Document front sensor actuator and document rear sensor actuator • Main PCB
(2) Document not fed.	• ADF and its related sections • Scanner motor and its harness • Document feed rollers and their related gears • Main PCB
(3) Document double feeding	• ADF parts
(4) Document jam	• Scanner motor • CIS film
(5) Recording paper not fed.	• ASF related gears • Main PCB
(6) Recording paper jam	• Paper feeding mechanism • Gear drive unit

[5] Print-image related

If the received or sent image has any problem, first make a copy with the facsimile equipment.

If the copied image is normal, the problem may be due to the remote terminal; if it is abnormal, proceed to the following checks:

Trouble	Action to be taken
(1) Completely blank 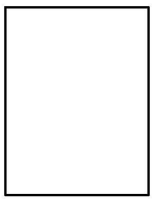	<u>At the scanner</u> Check the following components: - CIS harness - Main PCB - CIS unit
(2) Random color 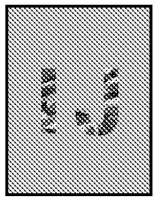	<u>At the printer</u> • Check each of the ink cartridges to confirm that the transparent tape covering the print head is removed. • Check that the ink cartridges has not run out of ink. • Check the dimple contacts between the print heads embedded in the Ink cartridges and the FPC on the carrier. Clean them if contaminated. (If the problem persists, replace the carrier ASSY.) • Check the connection of the carrier flat cables on the main PCB. (If either of those cables is broken or damaged, replace the carrier ASSY.) • Replace the main PCB.
(3) All black	<u>At the scanner</u> Check the following components: - CIS harness - CIS unit - Main PCB <u>At the printer</u> Check the following components: - Print heads embedded in the ink cartridges - Main PCB - Carrier ASSY (Replace the carrier ASSY.)

Trouble	Action to be taken
(4) Light 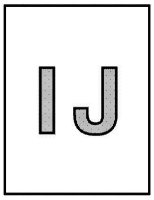	<u>At the scanner</u> Check the following components: - CIS unit - Main PCB <u>At the printer</u> Check the following components: - Ink cartridges - Main PCB - Power supply PCB - Interface PCB
(5) Dark 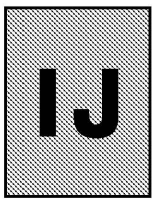	<u>At the scanner</u> Check the following components: - CIS unit - Main PCB <u>At the printer</u> • For each of the two ink-jet print heads embedded in the ink cartridges, perform the head nozzle cleaning operation several times to remove dust or air bubbles from its nozzles. (If the problem persists, replace the ink cartridge(s).) • Replace the main PCB, the interface PCB, and power supply PCB.
(6) Black or blurred vertical stripes 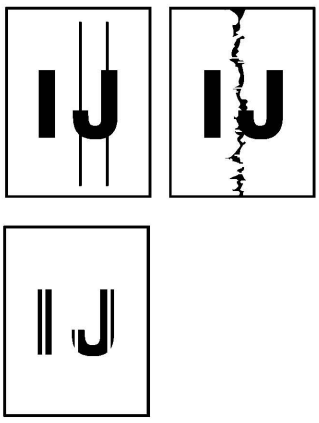	<u>At the scanner</u> Check the following components: - CIS unit <u>At the printer</u> • Check whether paper is in abnormal contact with any other components during ejecting.

Trouble	Action to be taken
(7) Print edges not aligned 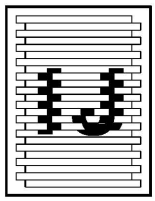	At the printer • Check the alignment of vertical print lines by using the Ink management function. • Check the ink cartridges.
(8) Ink splash 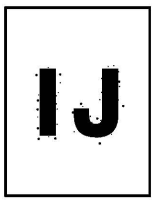 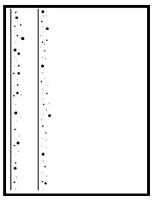	At the printer • For each of the two ink-jet print heads, perform the head nozzle cleaning operation several times to remove dust or air bubbles from its nozzles. • Check the ink cartridges. Either of them has run out of ink or the ink viscosity has been increased, so replace it. • Replace the ink cartridge(s). • Replace the main PCB. • Replace the power supply PCB. • Replace the interface PCB.
(9) Random missing dots 	At the printer • For each of the two ink-jet print heads, perform the head cleaning operation several times to remove dust or air bubbles from its nozzles. • Check the ink cartridges. If either of the cartridges has run out of ink, replace it. • Check the dimple contact between the print heads embedded in the ink cartridges and the FPC on the carrier. Clean it if contaminated. • Replace the ink cartridge(s). • Check the connection of the carrier flat cables on the main PCB. (If either of those cables is broken or damaged, replace the carrier ASSY.) • Replace the main PCB

Trouble	Action to be taken
(10) White horizontal streaks 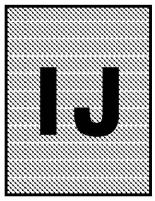	• For each of the two ink-jet print heads, perform the head nozzle cleaning operation several times to remove dust or air bubbles from its nozzles. • Replace the ink cartridge(s). • Check the paper feed-related rollers.
(11) Stained leading edge of recording paper 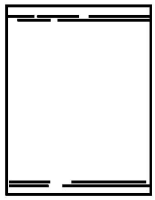	<u>At the printer</u> • Clean the nozzle ends of the ink-jet print heads embedded in the ink cartridges.

[6] PC-driven or video capture-driven printing

Trouble	Check:
(1) PC-driven printing is impossible.	• Interface with the host computer • PC interface cable • Main PCB • Centronics interface • Interface PCB • Centro harnesses (1 and 2), connecting the interface PCB and main PCB with each other
(2) Video capture-driven printing is impossible	• Video PCB • Main PCB • Interface PCB • Centro harnesses (1 and 2), connecting the interface PCB and main PCB with each other
(3) Video printing is impossible.	• Video PCB • Main PCB

EEPROM Customizing Codes

This function allows you to customize the EEPROM according to language, function settings, and firmware switch settings.

■ Operating Procedure

(1) To make the equipment enter the maintenance mode, press the **Function**, *, **2**, **8**, **6**, and **4** keys in this order. |← Within 2 seconds →|

The equipment beeps for approx. one second and displays " ▮▮ MAINTENANCE ▮▮▮ " on the LCD.

(2) Press the **7** and **4** keys in this order in the initial stage of the maintenance mode.

The current customizing code (e.g., 1001 in the case of U.S.A. versions) appears.

(3) Enter the desired customizing code (e.g., 0002 in the case of Canadian versions).

The newly entered code appears.

NOTE: *If a wrong 4-digit code is entered, the equipment will malfunction.*

(4) Press the **Start** key.

The equipment saves the setting and returns to the initial stage of the maintenance mode.

If you press the **Stop** key or no keys are pressed for one minute in the above procedure, the equipment stops the procedure and returns to the initial stage of the maintenance mode.

■ EEPROM Customizing Codes List

Versions	Model
	MFC7050C
U.S.A.	1001
CANADA	0002

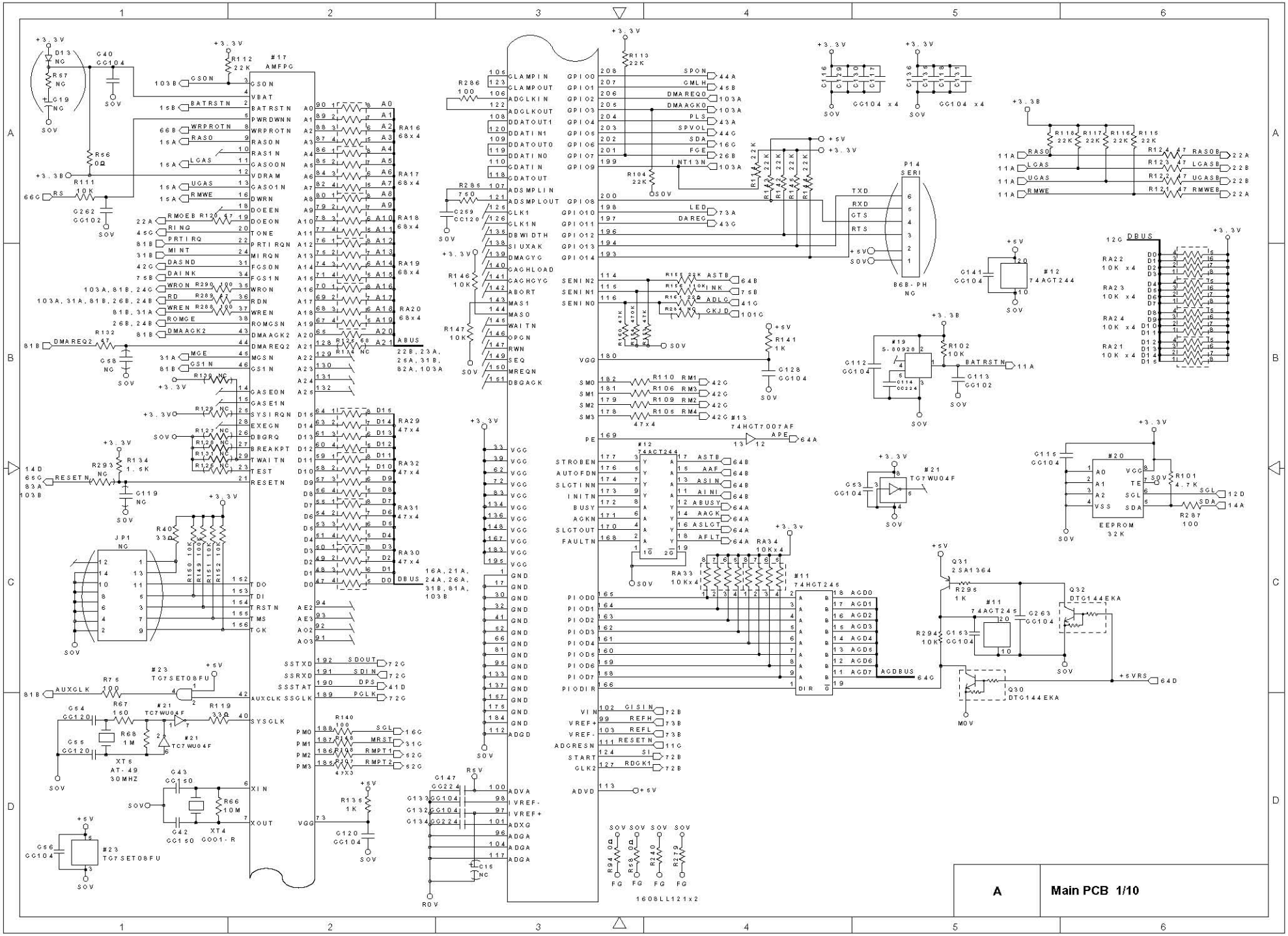
#17
AMFPG
#13
74HGT7007AF
#12
74ACT244
#11
74HGT245
#20
EEPROM
32K
#19
S-80928
#21
TC7WU04F
#23
TC7SET08FU
P14
SERI
B6B-PH
NC
JP1
NC
XT5
AT-49
30MHZ
XT4
GOO1-R
1608LL121x2
A
Main PCB 1/10

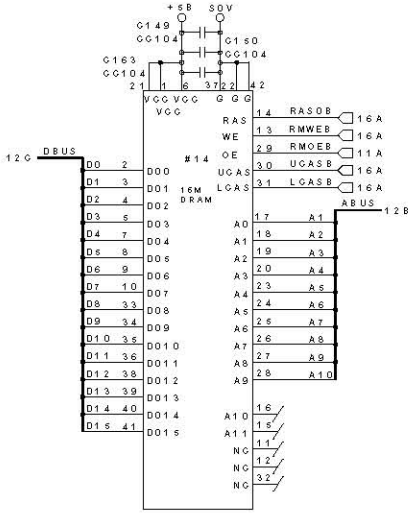

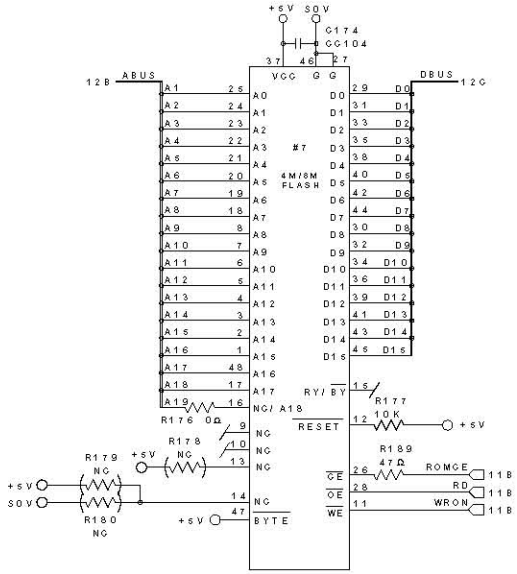

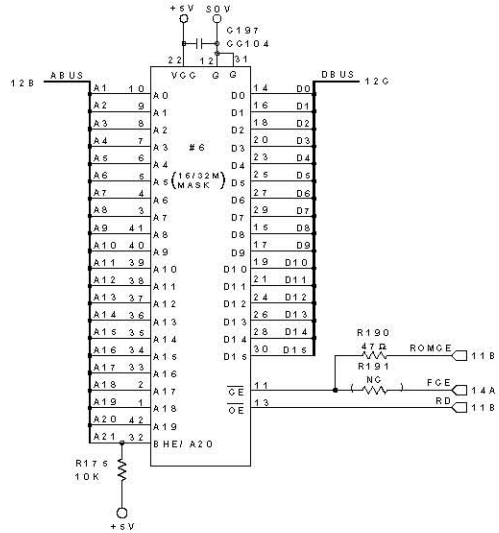

A	Main PCB 2/10

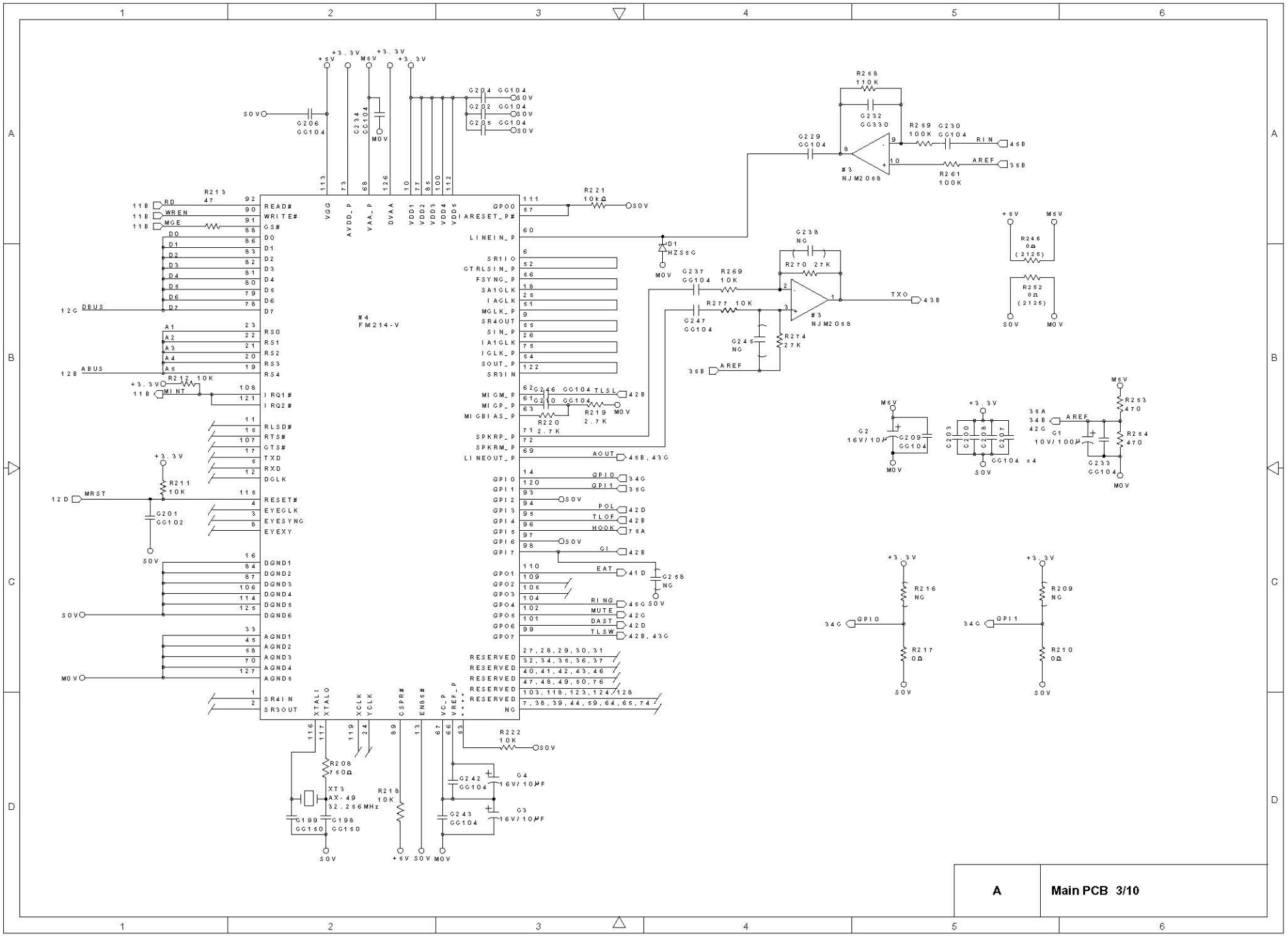
#4
FM214-V
#3
NJM2058
#3
NJM2058
A
Main PCB 3/10

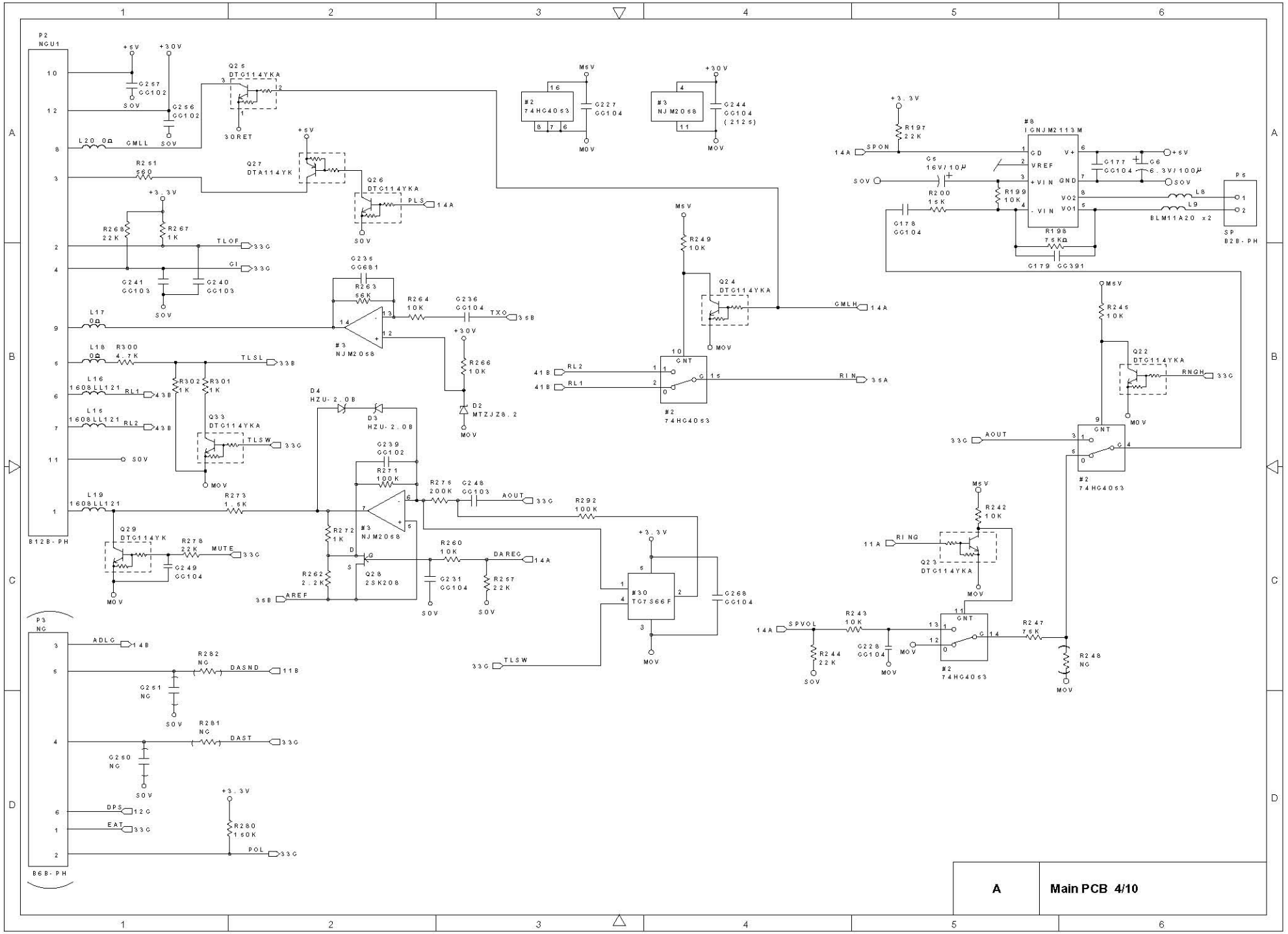
A
Main PCB 4/10

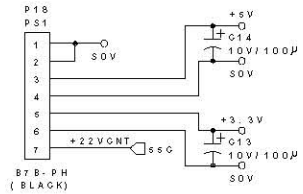

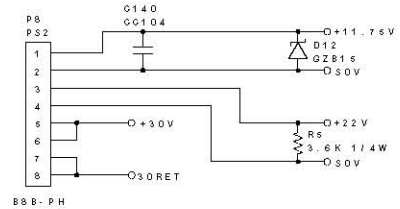

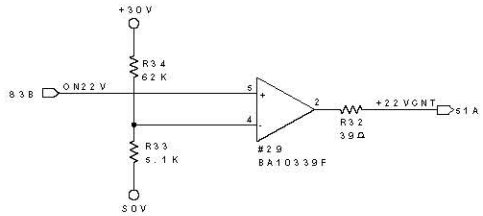

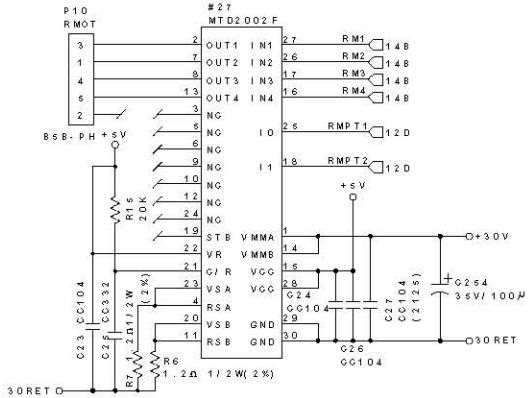

A	Main PCB 5/10

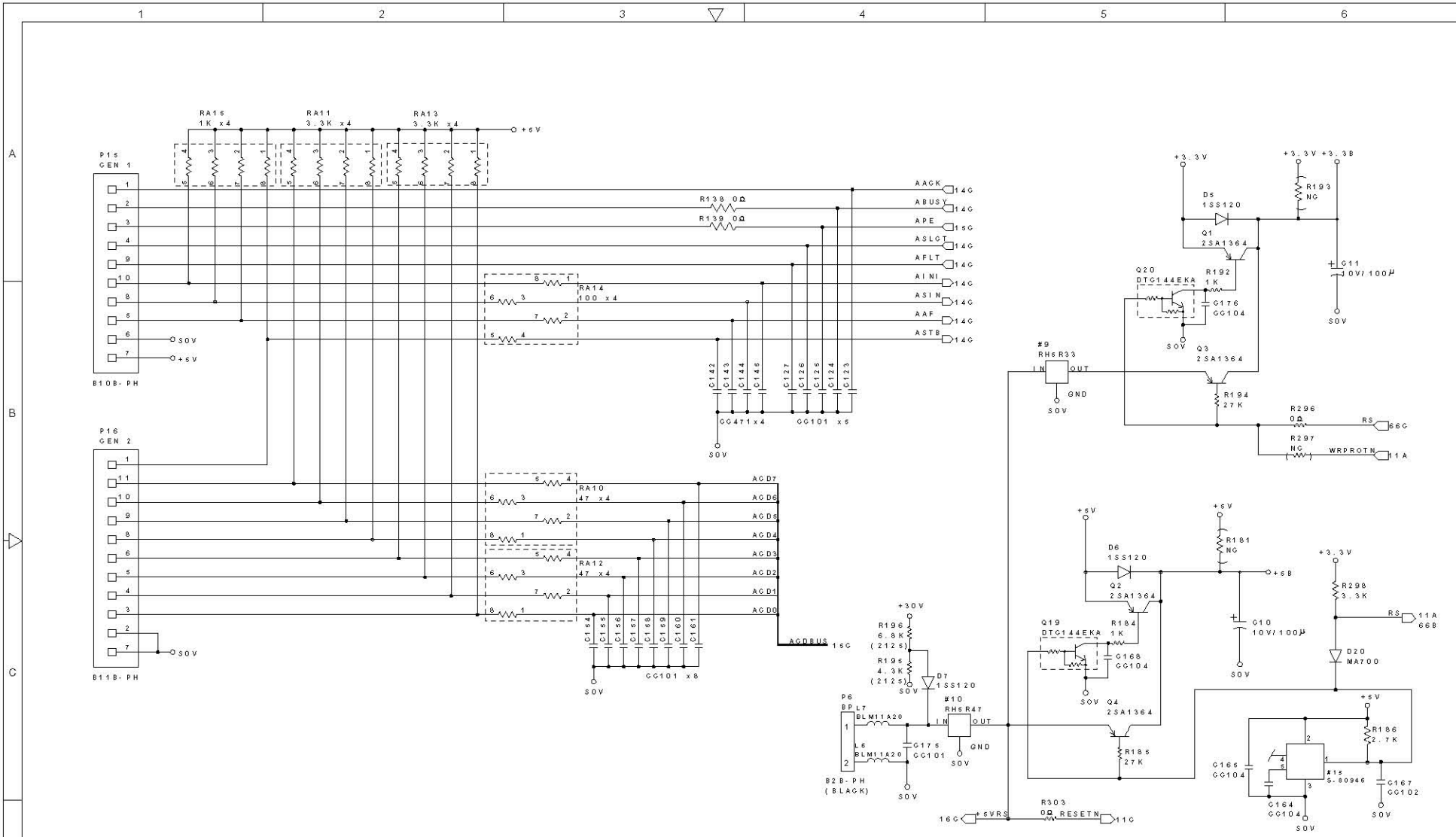

A	Main PCB 6/10

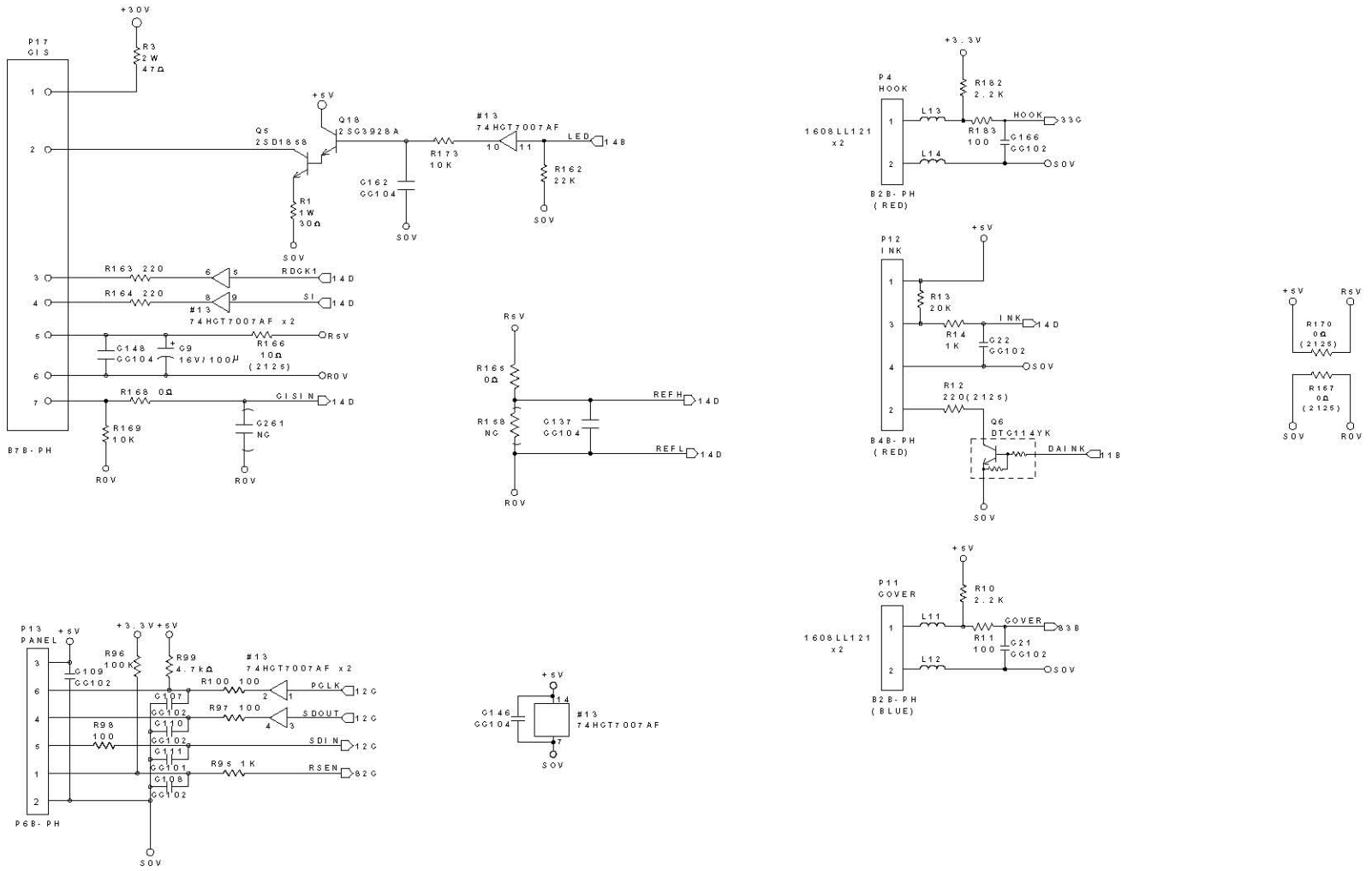

A	Main PCB 7/10

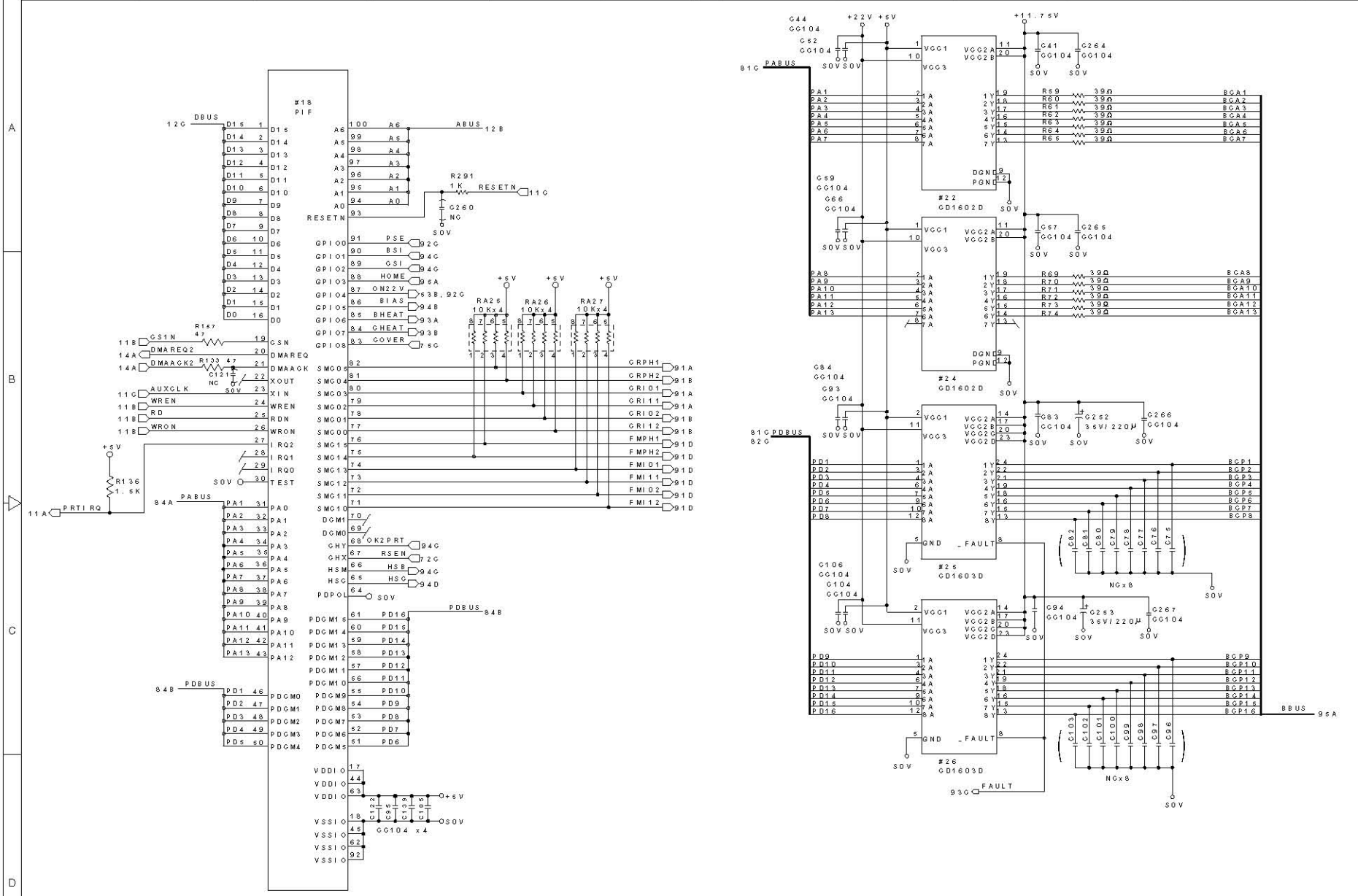
#18
PIF
DBUS
ABUS
RESETN
PABUS
PDBUS
PRTIRQ
AUXCLK
WREN
RD
WRON
CS1N
DMAREQ2
DMAACK2
PSE
BSI
GSI
HOME
ON22V
BIAS
BHEAT
CHEAT
GOVER
OK2PRT
RSEN
HSB
HSC
GRPH1
GRPH2
GRI01
GRI11
GRI02
GRI12
FMPH1
FMPH2
FMI01
FMI11
FMI02
FMI12
RA25 10Kx4
RA26 10Kx4
RA27 10Kx4
CG104 x4
#22 GD1602D
#24 GD1602D
#25 GD1603D
#26 GD1603D
NCx8
NCx8
BBUS
FAULT
+5V
+22V
+11.75V
SOV
A
Main PCB 8/10

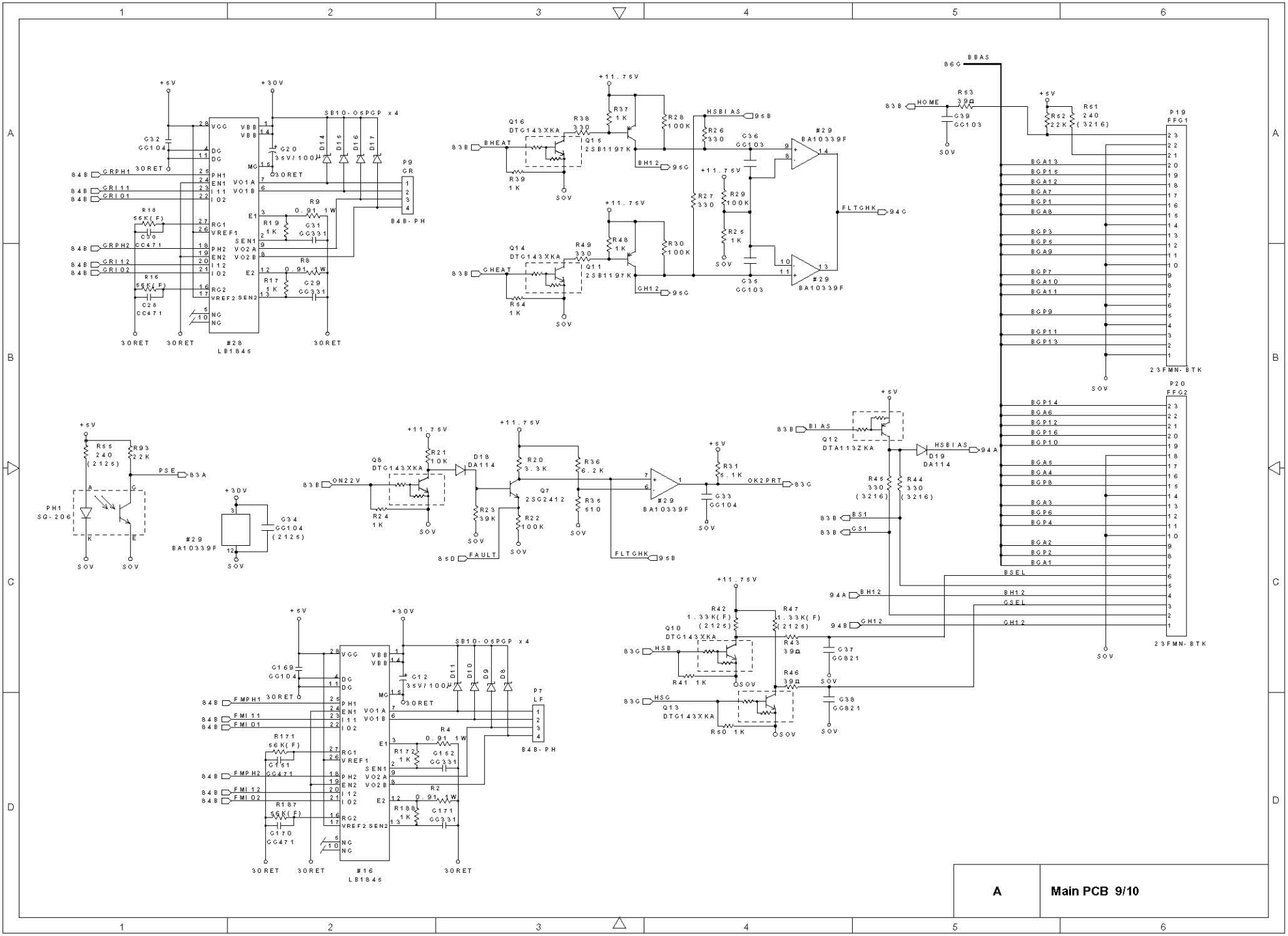
A
Main PCB 9/10

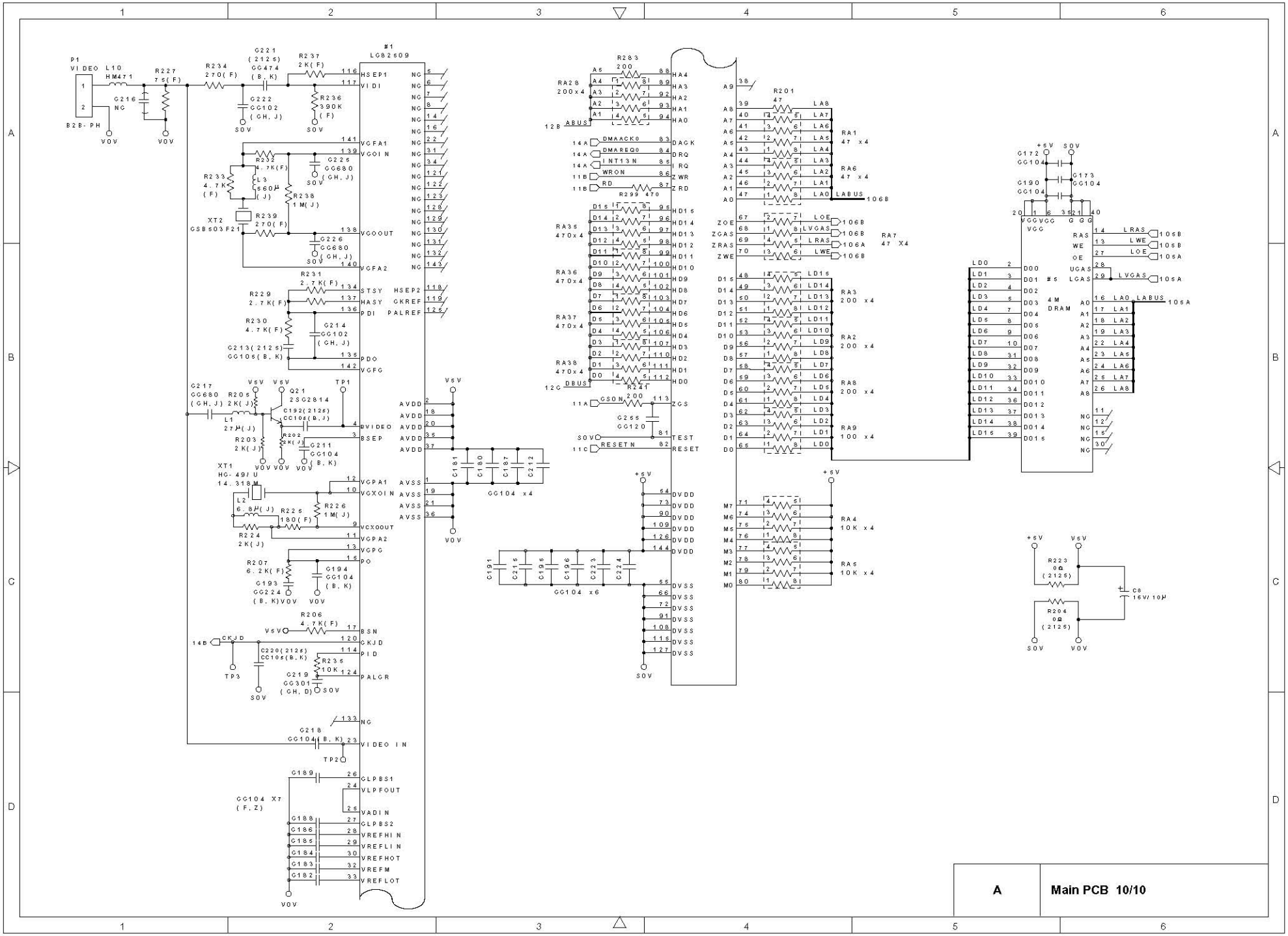
A
Main PCB 10/10

1．指示ナキ抵抗ノ消費電力ハ1／4Wトスル。

1．UNLESS OTHERWISE SPECIFIED, POWER CONSUMPTION OF RESISTORS IS 1/4W.

2．指示ナキコンデ゛ンサモノ耐圧ハ25V又ハ50Vトスル。

2．UNLESS OTHERWISE SPECIFIED, THE VOLTAGE RESISTANCE OF CAPACITORS IS 25V OR 50V.

3．（ ）内ノ部品ハ未実装トスル。

3．COMPONENTS IN PARENTHESIS NOT TO BE MOUNTED.

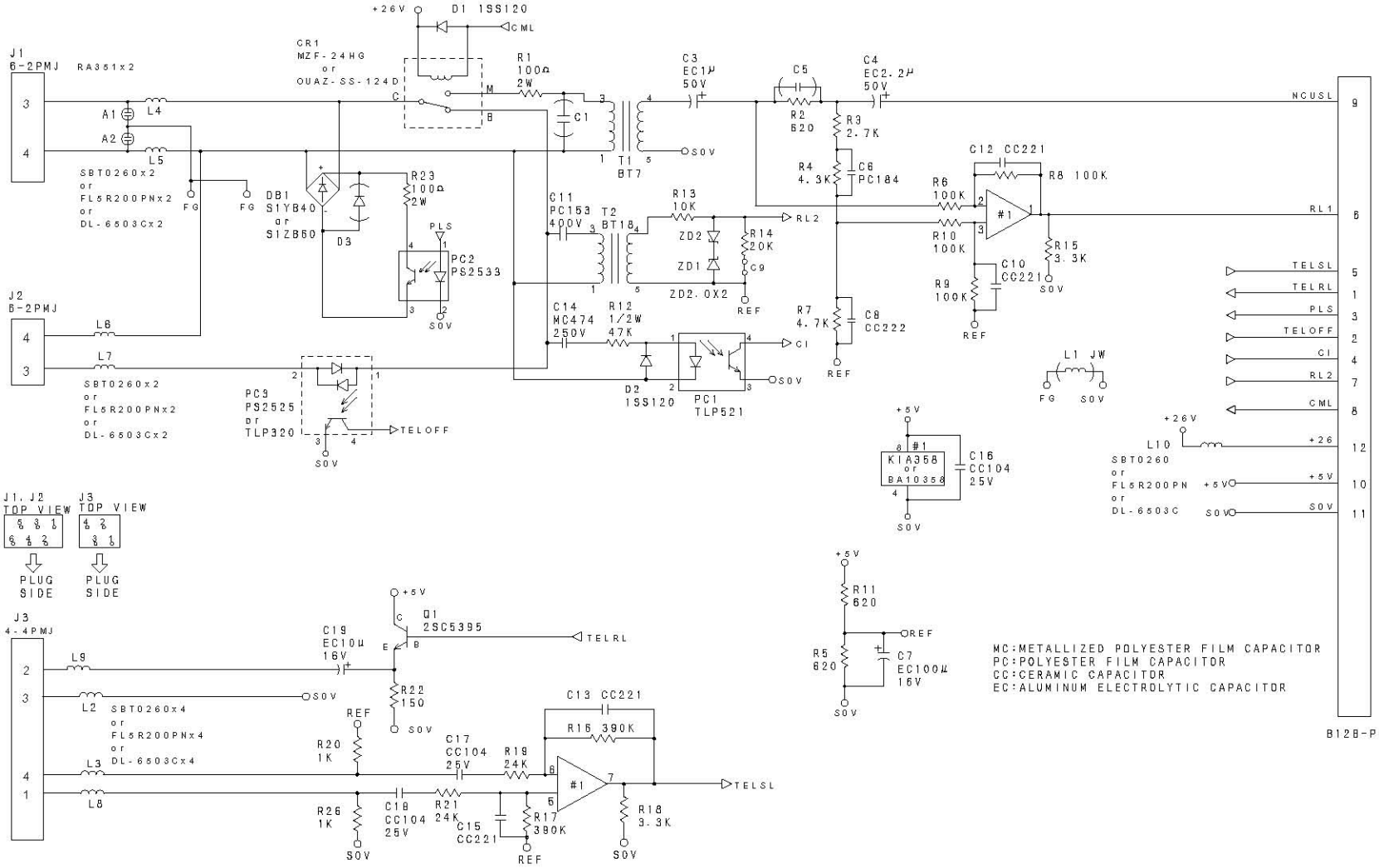

B	NCU PCB (U.S.A./Canada)

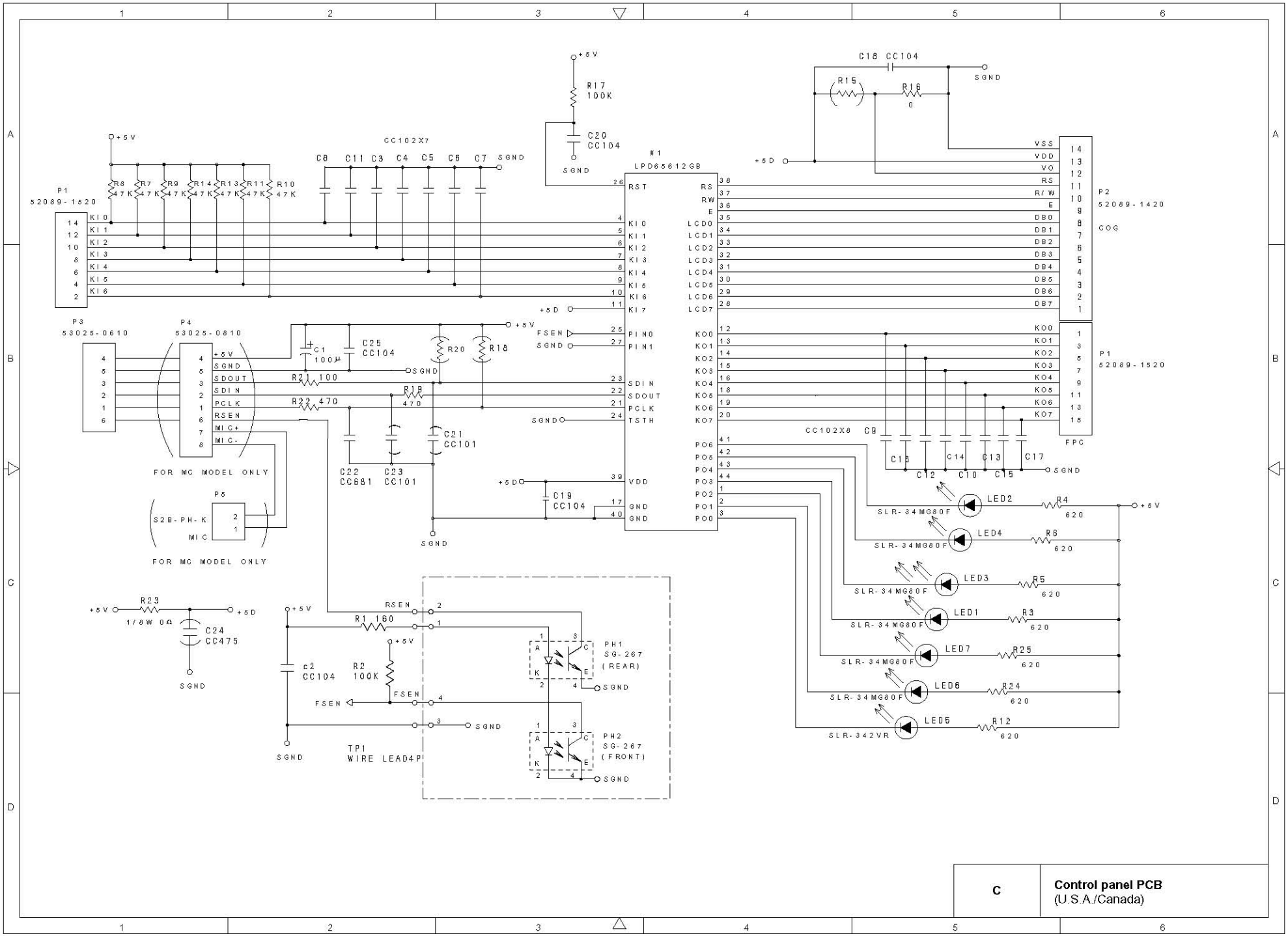
C
Control panel PCB
(U.S.A./Canada)
P1
52089-1520
P2
52089-1420
COG
P3
53025-0610
P4
53025-0810
P5
S2B-PH-K
MIC
FOR MC MODEL ONLY
FOR MC MODEL ONLY
#1
LPD65612GB
TP1
WIRE LEAD4P
PH1
SG-267
(REAR)
PH2
SG-267
(FRONT)
FPC
SLR-34MG80F
SLR-342VR
CC102X7
CC102X8
C18 CC104
C20 CC104
C19 CC104
C25 CC104
C24 CC475
C2 CC104
C21 CC101
C22 CC681
C23 CC101
R17 100K
R15
R16 0
R2 100K
R1 180
R21 100
R22 470
R18 470
R20
R23 1/8W 0Ω
C1 100μ
+5V
+5D
SGND
FSEN
RSEN
SDIN
SDOUT
PCLK
TSTH
VDD
GND
RST
VSS
VDD
VO
RS
R/W
E
DB0
DB1
DB2
DB3
DB4
DB5
DB6
DB7
LED1
LED2
LED3
LED4
LED5
LED6
LED7
R3 620
R4 620
R5 620
R6 620
R12 620
R24 620
R25 620

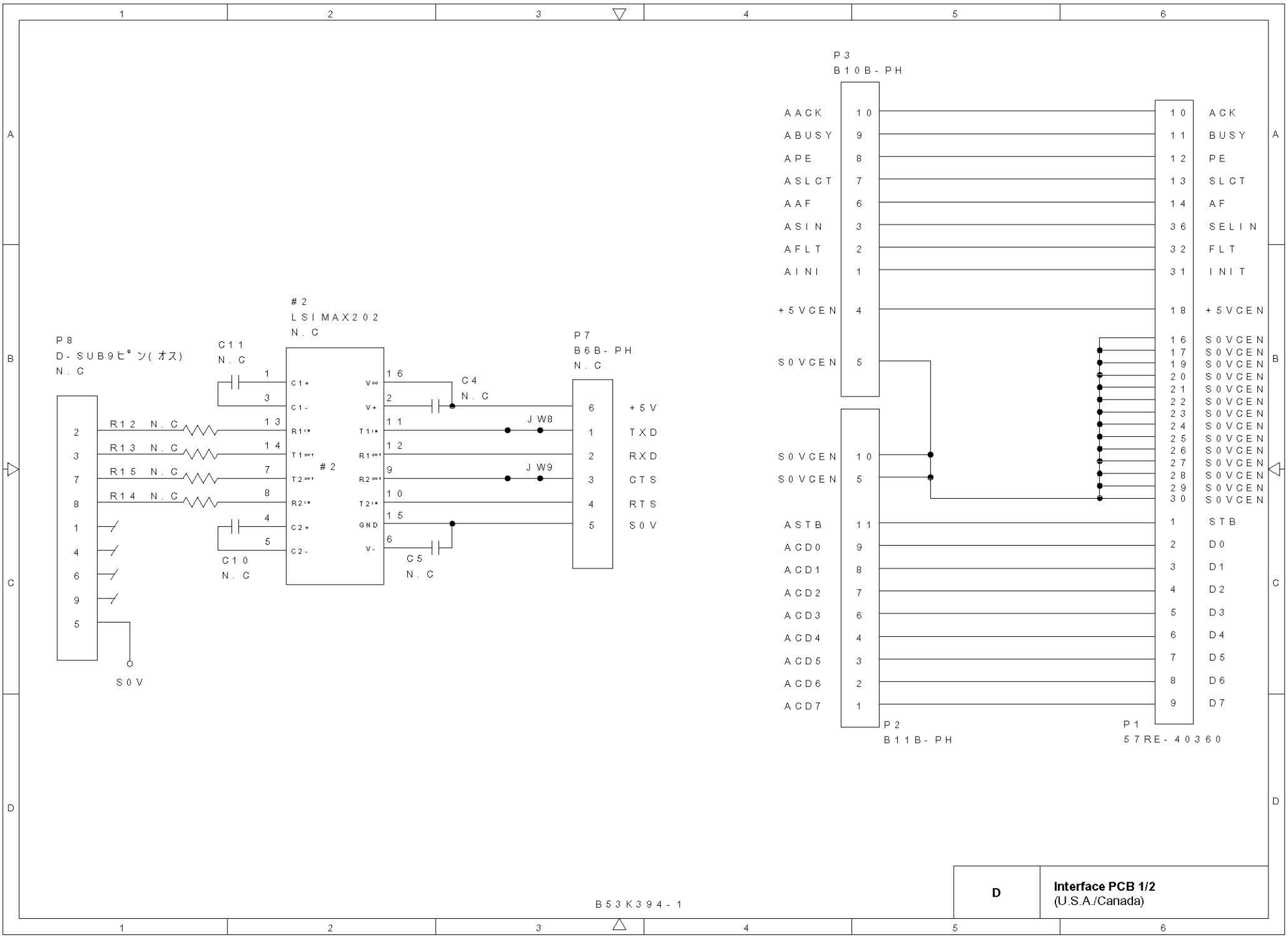

B53K394-1

D	**Interface PCB 1/2** (U.S.A./Canada)

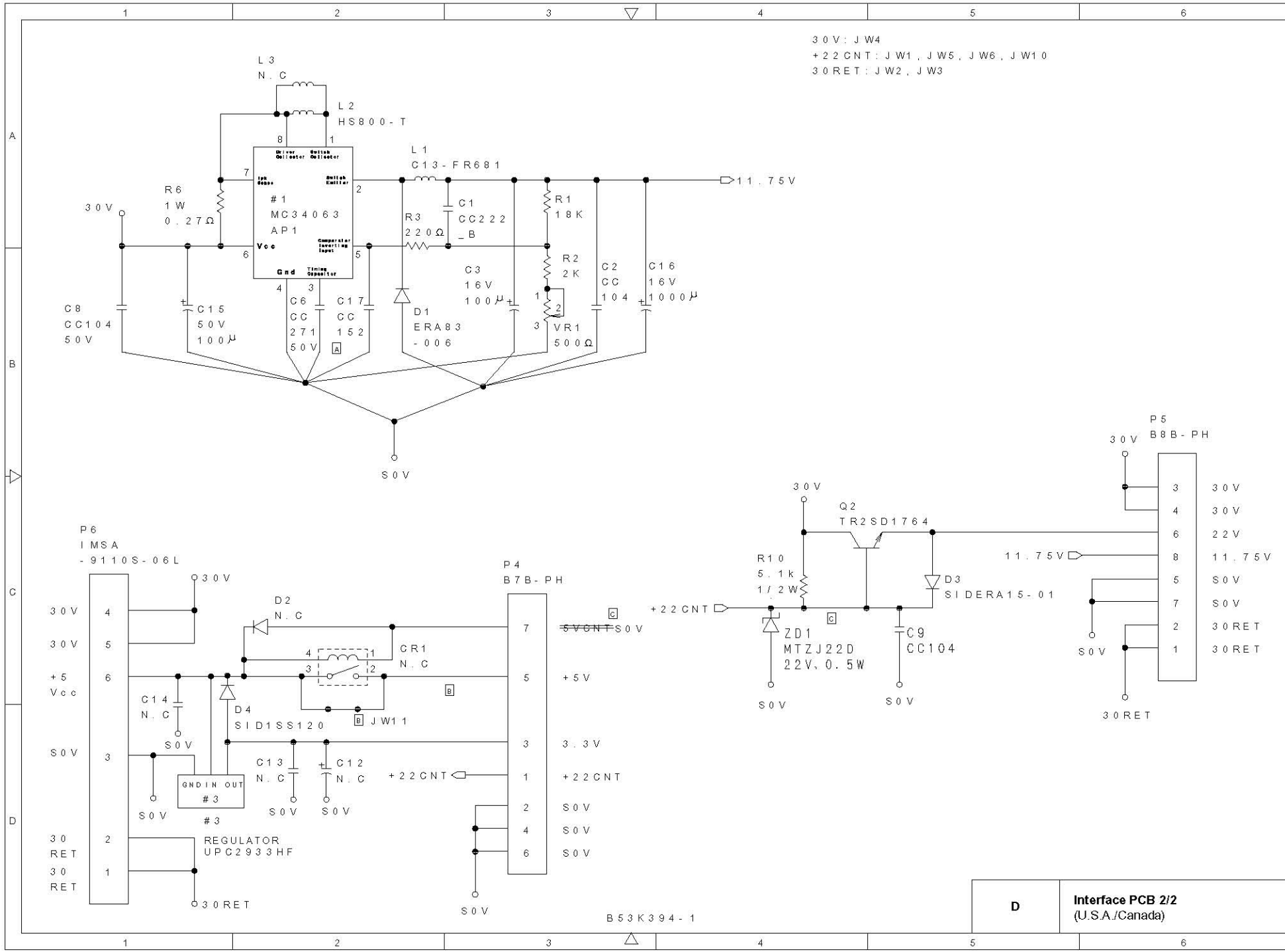
30V : JW4
+22CNT : JW1 , JW5 , JW6 , JW10
30RET : JW2 , JW3
L3
N.C
L2
HS800-T
L1
C13-FR681
11.75V
R6
1W
0.27Ω
30V
#1
MC34063
AP1
Vcc
Gnd
R3
220Ω
C1
CC222
_B
R1
18K
R2
2K
VR1
500Ω
C2
CC
104
C16
16V
1000μ
C3
16V
100μ
C8
CC104
50V
C15
50V
100μ
C6
CC
271
50V
C17
CC
152
D1
ERA83
-006
S0V
P5
B8B-PH
30V
30V
30V
22V
11.75V
S0V
S0V
30RET
30RET
Q2
TR2SD1764
R10
5.1k
1/2W
+22CNT
ZD1
MTZJ22D
22V, 0.5W
C9
CC104
D3
SIDERA15-01
P6
IMSA
-9110S-06L
30V
30V
+5
Vcc
S0V
30
RET
30
RET
D2
N.C
CR1
N.C
D4
SID1SS120
JW11
C14
N.C
GNDIN OUT
#3
C13
N.C
C12
N.C
REGULATOR
UPC2933HF
30RET
P4
B7B-PH
5VCNT
+5V
3.3V
+22CNT
S0V
S0V
S0V
S0V
B53K394-1
D
Interface PCB 2/2
(U.S.A./Canada)

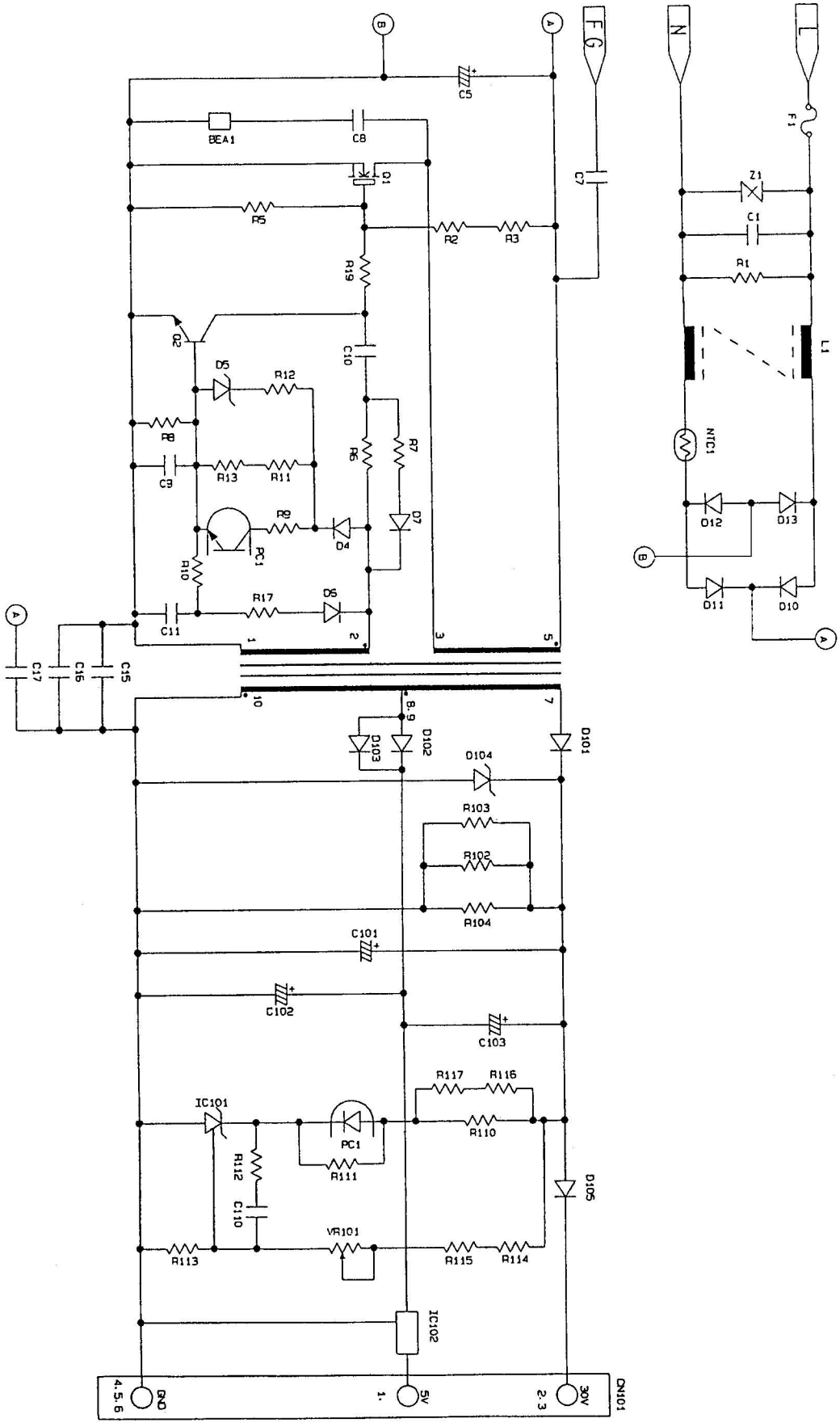

E	Power Supply PCB