HITACHI

MODEL V-211/V-212 V-222/V-422 OSCILLOSCOPE

SERVICE MANUAL

Hitachi Denshi, Ltd.

CONTENTS

1. Specifications 1
2. Accessories 6
3. Preventive maintenance 7
4. Calibration 9
   - 4.1 Calibration interval 9
   - 4.2 Test equipment required 9
   - 4.3 Preliminary procedure 9
   - 4.4 Preliminary control settings 11
   - 4.5 Initial starting procedure 11
5. Semiconductor lead configurations 22
6. Circuit description 24
7. Electrical parts arrangement (with Adjustment Locations) 27
8. Block diagram 31
9. Electrical parts list 33
   - ◇1 INPUT AMP 33
   - ◇2 VERT PREAMP, TRIG PICKOFF CH SW MULTI 36
   - ◇3 V OUT AMP 40
   - ◇4 TRIG GENERATOR 42
   - ◇5 SWEEP GEN 43
   - ◇6 H AMP 45
   - ◇7 HV Z AMP 47
   - ◇8 POWER SUPPLY 49
   - ◇9 RV/LAMP 50
10. Schematic diagrams 51

"WARNING – THESE SERVICING INSTRUCTIONS ARE FOR USE BY QUALIFIED PERSONNEL ONLY. TO REDUCE THE RISK OF ELECTRIC SHOCK, DO NOT PERFORM ANY SERVICING OTHER THAN CONTAINED IN THE OPERATING INSTRUCTIONS UNLESS YOU ARE QUALIFIED TO DO SO."

V-211

1 INPUT AMP 51
2 VERT PREAMP TRIG PICKOFF CAL 53
3 V OUT 55
4 TRIG GEN 57
5 SWEEP GEN 59
6 H AMP 61
7 HV & Z AMP 63
8 POWER SUPPLY 65
9 RV/LAMP 67
WIRING DIAGRAM 69

V-212

1 INPUT AMP 71
2 VERT PREAMP TRIG PICKOFF & CH SW MULTI 73
3 V OUT 75
4 TRIG GEN 77
5 SWEEP GEN 79
6 H AMP 81
7 HV & Z AMP 83
8 POWER SUPPLY 85
9 RV/LAMP 87
WIRING DIAGRAM 89

V-222

1 INPUT AMP 91
2 VERT PREAMP TRIG PICKOFF & CH SW MULTI 93
3 V OUT 95
4 TRIG GEN 97
5 SWEEP GEN 99
6 H AMP 101
7 HV & Z AMP 103
8 POWER SUPPLY 105
9 RV/LAMP 107
WIRING DIAGRAM 109

V-422

1 INPUT AMP 111
2 VERT PREAMP TRIG PICKOFF & CH SW MULTI 113
3 V OUT AMP 115
4 TRIG GEN 117
5 SWEEP GEN 119
6 H AMP 121
7 HV & Z AMP 123
8 POWER SUPPLY 125
9 RV/LAMP 127
WIRING DIAGRAM 129

11. Mechanical parts list and exploded view 130
V-211/V212 130
V-222/V-422 132

NOTICE

This Service Manual describes the most typical product of this model. If there are any specific differences between this Manual and the servicing unit, please contact Hitachi Denshi sales office in your area.

MODEL V-211/V-212/V-222/V-422

OSCILLOSCOPE

Service Manual

1. SPECIFICATIONS

[ ] : Specifications for V-422

CRT

Type

Large 6" screen with internal graticule

Approximate 2kV [12kV] acceleration potential

Screen type

P31 phosphor standard

Useful screen area

8 × 10 div

Graticule

Internal graticule with centimeter divisions and 2 mm subdivisions along the centeral axis, 10 % and 90 % lines are indicated.

Illumination continuously variable. (For : V-222, V-422)

Focussing

Possible (with automatic focus correction circuit : V-222 and V-422)

Trace rotation	Provided
Scale illumination	Variable (For : V-222, V-422)
Intensity control	Provided

Z-AXIS INPUT (INTENSITY MODULATION)

DC-coupled, positive-going signal decreases intensity: 5 Vp-p signal causes noticeable modulation at normal intensity: DC to 2 MHz.

Input impedance	47 kΩ (typ.) [33 kΩ (typ.)]
Maximum input voltage	30 V (DC + peak AC)
Coupling	DC

VERTICAL DEFLECTION SYSTEMS (2 Identical Channels)

Bandwidth and rise time

DC to at least 20 MHz [40 MHz] and rise time 17.5 ns [8.8 ns] or less.

DC to at least 7 MHz and rise time 50 ns or less at magnifier extends. The AC coupled lower -3 dB point is 10 Hz or less.

Deflection factor

5 mV/div to 5 V/div in 10 calibrated steps, in a 1-2-5 sequence. The uncalibrated continuous control extends deflection factor to at least 12.5 V per division in the 5 volts/div position. The ×5 magnifier increases sensitivity of each deflection factor setting to 1 mV/div.

Accuracy

±3 % (+10 to +35 °C)

Additional error for magnifier ±2 %

Display modes

CH1, CH2 (normal or invert), Alternate, Chopped (Approx. 250 kHz), Added

Input impedance

1 MΩ ±3 % in parallel with 23 ± 3 pF

Maximum input voltage

300 V (DC + peak AC)

Input coupling

AC, GND, DC

HORIZONTAL DEFLECTION SYSTEM

Time base

0.2 μs/div to 0.2 s/div in 19 calibrated steps, in a 1-2-5 sequence. The uncalibrated continuous control extends deflection factor to at least 0.5 seconds per division in the 0.2 sec/div position. The ×10 magnifier extends maximum sweep rate to 100 ns/div [20 ns/div].

Accuracy

±3 % (+10 to +35 °C)

Additional error for magnifier ±2 %

TRIGGERING SYSTEM

Trigger modes

Automatic, Normal, TV (TV-H or TV-V)

Trigger source

Internal (CH1, CH2, V.MODE), Line, External : V-212, V-222, V-422

Internal, Line, External, EXT-H : V-211

Trigger slope

+ or -

TV sync polarity

TV (-)

Triggering level variable range — Internal ; ±6 div or more; External ; approx. ±2 V

Triggering sensitivity and frequency

Frequency	Internal (V. MODE)	External
20 Hz - 2 MHz [20 Hz - 5 MHz]	0.5 div (2.0 div)	200 mV
2 - 20 MHz [5 - 40 MHz]	1.5 div (3.0 div)	800 mV

(Except ; (V.MODE) : V-211)

TV-V, TV-H sensitivity: SYNC level more than 1 div or 1 V

AUTO: Approx. 25 Hz (when time base is 0.1 μs/div to 2 ms/div)

Trigger coupling

AC : 25 Hz to full bandwidth

External trigger input impedance

1 MΩ +20 % in parallel with 25 pF ±5 pF

(EXT ⊠ ; about 100 kΩ : V-211)

Maximum input voltage

300 V (DC + AC to 1 kHz or less)

X-Y OPERATION

V·INPUT ; Vert, EXT TRIG IN ; Horiz : V-211

CH1 ; Horiz, CH2 ; Vert : V-212, V-222, V-422

Deflection factor

Same as vertical deflection

(X-axis; about 200 mV/div : V-211)

Accuracy

Y: ±3 % (+10 to +35 °C)

X: ±5 % (+10 to +35 °C)

Additional error for magnifier ±2 %

X-bandwidth

DC to at least 500 kHz

Phase error

3° or less from DC to 50 kHz : V-212, V-222, V-422

3° or less from DC to 10 kHz : V-211

CALIBRATOR

An approx. 1 kHz frequency 0.5 V (± 3%) square wave.

POWER SUPPLY

VOLTAGE (50/60 Hz)	FUSE
100 V (90 - 110 V)	2A
120 V (108 - 132 V)	2A
220 V (198 - 242 V)	1A
240 V (216 - 264 V)	1A

Nominal voltage ± 5 % at 400 Hz

Power supply frequency : 50, 60, 400 Hz

Power consumption : Approximately 30 W

ENVIRONMENT

Limit of operation temperature	0 - 40 °C
Limit of operation humidity	35 - 85 %
Rated range of use temperature	10 - 35 °C
Rated range of use humidity	45 - 85 %
Storage and transportation temperature	-20 - 70 °C

DIMENSIONS AND WEIGHT

Approx. 310(W) × 130(H) × 370(D) mm
(12.4(W) × 5.2(H) × 14.8(D) inch)

Approx. 6 kg (13.5 lbs): for V-211, V-212

Approx. 6.5 kg (14.6 lbs): for V-222, V-422

2. ACCESSORIES

This instrument is shipped along with following accessories.

—— V-211 ——

1 Probe (AT-10AJ 1.5)

1 AC power cord

1 Operation Manual

—— V-212 ——

2 Probes (AT-10AJ 1.5)

1 AC power cord

1 Operation Manual

—— V-222/V-422 ——

2 Probes (AT-10AK 1.5)

1 AC power cord

1 Operation Manual

3. PREVENTIVE MAINTENENCE

Preventive maintenance, when performed on a regular basis, can prevent instrument breakdown and may improve the reliability of the oscilloscope. The severity of environment to which this instrument is subjected will determine the frequency of maintenance. A convenient time to perform preventive maintenance is just prior to the recalibration of the instrument.

Disassembly

Remove all of the screws on the top cover of the instrument, then gently remove the top cover.

Take the same procedure for the bottom cover.

Most of the internal parts of the instrument are now accessible.

(See section 10. Exploded view)

Cleaning

The instrument should be cleaned as often as the operating conditions require, since the accumulation of dirt in the instrument may cause the component breakdown.

The covers can provide protection against dust in the interior of the instrument. Loose dust accumulated on these covers can be removed with a soft cloth or small brush.

Dirt that remains can be removed with a soft cloth applying in a mild detergent and water solution. Abrasive cleaners should not be used.

Cleaning the interior should be only occasionally necessary. The best way to clean the interior is to blow off the dust with a dry, low-velocity stream of air. A soft-bristle brush or a cotton-tipped applicator is useful for cleaning narrow spaces or for cleaning more delicate components.

Visual inspection

The instrument should be inspected occasionally for such defects as broken connections, improperly seated transistors, damaged circuit boards, and heat-damaged parts. The corrective procedure for most visible defects is apparent; however, particular care must be taken if heat-damaged components are found. Overheating usually indicates

other trouble in the instrument; therefore, correcting the cause of the overheating is important to prevent the recurrance of the damage.

4. CALIBRATION

Hitachi Denshi, Ltd. provides complete instrument repair and recalibration at our office, and authorized dealer. Contact your local Hitachi Denshi sales office or representative.

4. 1 Calibration interval

To maintain instrument accuracy, perform the calibration of the V-211, V-212, V-222, V-422 at least every 1000 hours of operations or every six month if used infrequently.

4. 2 Test equipment required

The following test equipment and accessories, or its equivalent, are required for the complete calibration of the V-211, V-212, V-222, V-422. Specifications given for the test equipment are the minimum necessary for accurate calibration. Therefore, the specifications of any test equipment used must meet or exceed the listed specifications.

All the test equipment is assumed to be correctly calibrated and operated within the listed specification. Operating instructions for the test equipment are not given in this procedure. Refer to the instruction manual for the test equipment if more information is needed.

4. 3 Preliminary procedure

This instrument should be calibrated at an ambient temperature of +20 °C (±5 °C) for best overall accuracy.

1. Connect the instrument to AC line voltage, 50/60/400 Hz line source.
2. Set the instrument controls as given in the preliminary control settings. Allow at least fifteen minutes of warmup before proceeding.
3. See the adjustment locations in the pullout pages.

Table 4-2

TEST EQUIPMENT REQUIRED

Description	Minimum specification	Usage	Example of applicable test equipment
1. Constant amplitude signal generator	50kHz reference frequency; maximum frequency 70MHz; variable amplitude	Check horizontal, vertical and trigger bandwidth.	
2. Standard amplitude calibrator	Amplitude accuracy: 0.25%, variable amplitude; 5mV to 40V; frequency: 1 kHz square wave	Check horizontal and vertical gain.	
3. Square-wave generator	Variable frequency: 10Hz to 1MHz; output amplitude; 10mV to 100V	Check probe and vertical compensation.	
4. Digital voltmeter	0.1% accuracy	Check power supply.	
5. Time mark generator	0.1% accuracy	Check horizontal timing.	
6. Cable	Impedance, 50 ohms; type, RG-58/U; length, 42 inches, connectors, BNC	External trigger operation check. Horizontal gain check and adjustment.	Hitachi part No.4202
7. Termination	Impedance, 50 ohms; connectors, BNC	Vertical amplifier compensation checks and adjustment.	
8. Attenuator	Ratio, 1/10; connectors, BNC; impedance, 50 ohms	Vertical amplifier bandwidth check.	
9. T-connector	Connectors, BNC	External trigger operation checks.	Hitachi part No.1301

4. 4 Preliminary control settings

Set the instrument controls as follows, when starting the calibration procedures.

Controls	Settings	Controls	Settings
FOCUS	Midrange		
TRACE ROTATION	As desired		
- VERT -			
V. POSITION	Midrange, pushed in	SWP VAR	Fully clockwise
V. VARIABLE	CAL, fully clockwise	CH1 ALT MAG	Normal (Button Out)
INPUT COUPLING	GND (AC-GND-DC)	- TRIG -	
VOLTS/DIV	5 mV/DIV		
V.MODE	CH1	LEVEL	Midrange, Normal
CH2 INV	Normal, Pushed in	SLOPE	+ Normal
- HORZ -			
H. POSITION	Midrange	MODE	AUTO
PULL ×10 MAG	Normal, Pushed in	SOURCE	INT
TIME/DIV	1 ms	INT TRIG	CH1

4. 5 Initial starting procedure

1. Rotate the INTENsity control to the midrange and set the POWER switch to ON.
2. Wait a few seconds for the cathode ray tube (CRT) to warm up. A trace should appear on the CRT.
3. If trace disappears, increase (clockwise) the INTENsity control setting until the trace is easily observed, or roughly check/adjust the DC balance to get a trace as same as (13).
4. Adjust the FOCUS control for the best focused display.
5. Readjust the POSITION controls if necessary, to center the trace.

POWER SUPPLY SYSTEM

NOTE

Before you start operation, see the adjustment locations in the pullout pages.

Control settings

Preset the controls as given in the preliminary control setting

(1) Check low-voltage supply, if necessary.

a. Connect the digital voltmeter (DVM) between the +8 V line (P1105-2) and ground

: +7.3 to +8.3 V

b. Connect the DVM between the -8 V line (P1105-4) and ground

: -8.3 to -7.7 V

c. Connect the DVM between the +5 V line (P1105-3) and ground

: +4.8 to +5.2 V

d. Connect the DVM from the +120 V/+75 V line (P1105-1) and ground

: +110 to +130 V (For V-211, V-212, V-222)

: +67.5 to +82.5 V(For V-422)

(2) Check high voltage supply.

a. Connect the DVM to the H.V. test point (P1001-1) with a high voltage probe.

b. Check for a reading of -1.995 to 1.805 kV --- V-211, V-212, V-222

-1.732 to 1.568 kV --- V-422

DISPLAY

Control setting

Preset the controls as given in the preliminary control setting.

(3) Check/adjust CRT bias.

Set the Trig MODE switch to the AUTO, and set the TIME/DIV switch to the 1 ms.

a. Connect the digital voltmeter (DVM) to the R904 (or D1022-Ⓐ) and ground.

b. Adjust the INTENSITY control so that the DVM indicates 15.0 V.

c. Observe the trace of CRT.

d. Adjust the grid bias adjustment RV1021 for the trace makes a just appear.

④ Check/adjust trace rotation.

a. Position the trace to the center graticule line.

b. Check that the trace is in parallel with the center horizontal line.

c. Adjust TRACE ROTATION (screwdriver adjustment on front panel) for a trace that is in parallel with the horizontal graticule lines.

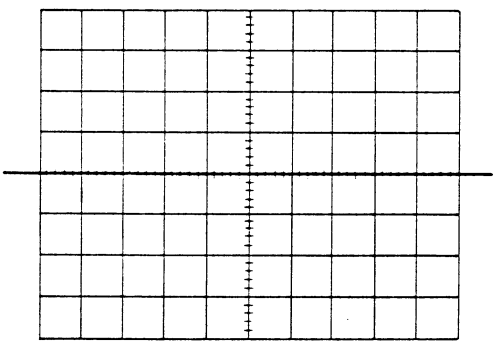

⑤ Check/adjust GEOMetry

a. Set the TIME/DIV to the 0.1 ms, and the input coupling switch to DC.

b. Connect the constant amplitude signal generator to the input.

c. Set the VOLTS/DIV switch setting for a full-screen (8 division) deflection.

d. Check that horizontal bowing is less than ±0.15 division.

For V-422

e. Adjust the GEOM adjustment RV1033 for a display so that horizontal bowing is less than ±0.15 division.

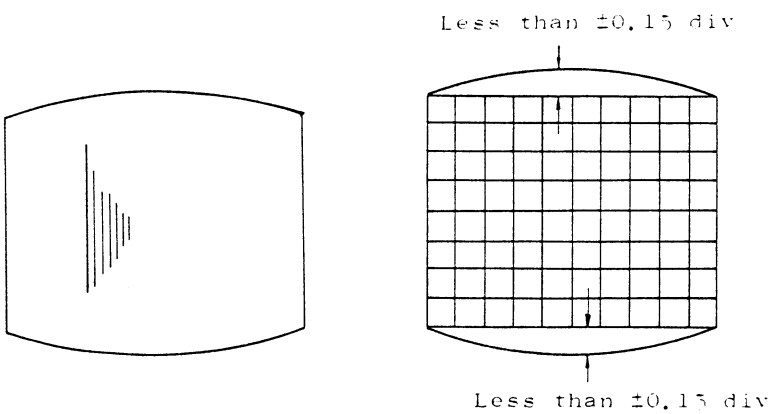

⑥ Check/adjust ASTIGmatism and FOCUS.

a. Set the TIME/DIV switch to the X-Y position, and the input coupling switch to GND.

b. Set the INTENsity control for a small spot, as the following figure, using the position controls.

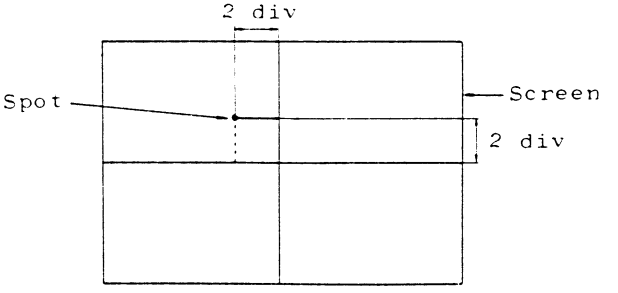

c. Check that the spot is round.

d. Adjust the FOCUS adjustment and ASTIG adjustment RV1035 for a round spot.

HORIZONTAL SYSTEM

Control settings

Preset the controls as given in the preliminary control settings.

⑦ Check/adjust horizontal gain.

a. Set the input AC-GND-DC to DC.

b. Connect the cable to the output of the time mark generator.

c. Set the time mark generator for 1 ms time marks.

d. Check that the time marks align with the graticule lines over the center eight divisions, within 3 %.

e. Adjust the H GAIN adjustment RV824 so that the time marks coincide with the middle eight graticule lines.

⑧ Check/adjust Horizontal ×10 MAG Gain.

a. Set the TIME/DIV switch to 1 ms.

b. Set ×10 MAG (pull out the knob of the POSITION control).

c. Check that the one-cycle time marks align with the ten-divisions graticule lines, within 5 %.

d. Adjust the MAG GAIN adjustment RV831 so that one-cycle time marks coincide with the ten-division graticule lines.

e. Push in the POSITION control after adjustment and check.

(9) Check/adjust MAG CENT.

a. Set the TIME/DIV switch to 1 ms.

b. So that the knob of H.POSITION is pulled out (×10 MAG), the left end of the trace is brought to the center point and then the knob of H.POSITION is depressed.

c. Observe the movement of the left end of the trace.

d. Adjust the MAG CENT adjustment RV821 for the movement of the left end of the trace within ±0.2 div.

(10) Check/adjust low speed sweep accuracy.

a. Set the time mark generator for 10 ms time marks.

b. Set the TIME/DIV switch to 10 ms.

c. Check that the time marks align with the graticule lines over the middle eight divisions, within 3 %.

d. Adjust the 10 ms/DIV adjustment RV542 so that the time marks coincide with the middle eight graticule lines.

(11) Check/adjust high speed sweep accuracy.

a. Set the input coupling switch to DC.

b. Set the time mark generator for 2 μs time marks.

c. Set the TIME/DIV switch to 2 μs.

d. Check that the time marks align with the graticule lines over the middle eight divisions.

e. Adjust CV520 so that the time marks coincide with middle eight graticule lines.

(12) Check/adjust high speed ×10 MAG GAIN

a. Set the TIME/DIV switch to the 2 μs.

b. Set ×10 MAG (pull out the knob of the POSITION control).

c. Check that the one-cycle time marks align with the ten-divisions graticule lines, within 5 %.

d. Adjust the high speed Mag gain adjustment CV840 so that one-cycle time marks align with the ten-division graticule lines.

e. Push in the POSITION control after adjustment and check.

VERTICAL SYSTEM

(13) Check/adjust DC balance (Step attenuator balance).

a. Set the VOLTS/DIV switch to the 5 mV position.

b. Position the trace to the horizontal center line.

c. Change the VOLTS/DIV switch to the 10 mV position.

d. Check that the trace is within ±0.05 division of the center horizontal line.

e. Adjust the CH1 (CH2) DC BAL adjustment, RV22 (CH1) or RV122 (CH2), for a trace at the horizontal center line.

f. Repeat the part (a) through (e) until less than ±0.05 division shift is noted when changing the VOLTS/DIV setting.

(14) Check/adjust vertical position center.

For V-211, V-212

a. Confirm the vertical POSITION control at the midrange.

b. Check the trace is within 1 division.

c. Adjust the position center adjustment RV63 (CH1), RV163 (CH2) for a trace at the horizontal center line.

For V-222, V-422 (CH1 only)

a. Pull out the vertical POSITION control (set the DC OFFSET mode).

b. Connect a DVM to the DC OFFSET VOLT OUTput terminal.

c. Adjust the vertical POSITION control so that the DVM indicates 0 V.

d. Adjust the position center adjustment RV63 (CH1 only), for a trace at the horizontal center line.

For V-222, V-422 (CH2)

e. Confirm the vertical POSITION control at the midrange.

f. Check the trace is within 1 division.

g. Adjust the position center adjustment RV163 (CH2) for a trace at the horizontal center line.

(15) Check/adjust ×1 AC GAIN.

a. Set the TIME/DIV switch to the 1 ms position.

b. Set the VOLTS/DIV switch to the 10 mV position.

c. Set the input coupling switch to DC.

d. Connect the square-wave generator (using 1 kHz output range).

e. Adjust the output amplitude of that generator for 5 division deflection of screen.

f. Check the high-voltage level of pulse is flat.

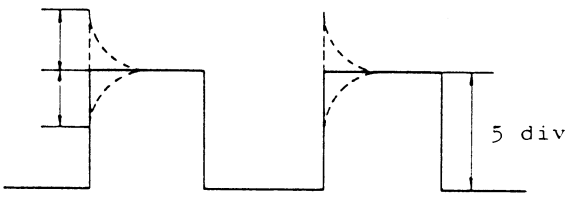

g. Adjust the ×1 AC GAIN RV33 (CH1), RV133 (CH2) adjustment for a flat level.

(16) Check/adjust vertical gain.

a. Set the VOLTS/DIV switch to the 10 mV position and the input coupling switch to DC.

b. Connect the standard amplitude calibrator to the input connector.

c. Set the standard amplitude calibrator for a 50 mVp-p (5 divisions for display) signal.

d. Check for a display of five divisions.

e. Adjust the GAIN adjustment RV62 (CH1), RV162 (CH2) for a display of 5 divisions within 2 %.

f. Check all the VOLTS/DIV switch settings.

(17) Check/adjust input capacity (ATT: ÷1).

a. Set the VOLTS/DIV switch to the 10 mV position.

b. Set the input coupling switches to DC.

c. Connect the L-C meter to the input terminals.

d. Check the input capacity for approx. 23 pF.

(18) Check/adjust vertical step response.

a. Set the VOLTS/DIV switch to the 5 mV position.

b. Set the TIME/DIV switch to the 0.5 μs position.

c. Connect the fast-rise, positive output (50 mV, 1 MHz) of the square-wave generator to the input. Use a 50 Ω termination and cable.

d. Adjust the square-wave generator output for a 5-divisions display.

e. CH1 - Adjust CV336 (and CV355 : V-422 only) so that a square wave is flat. Then, adjust CV337 for overshoot of +0.2 div.

CH2 - Adjust CV161 for overshoot of +0.2 div.

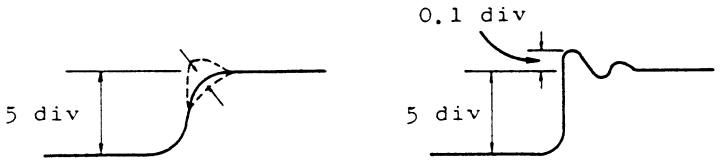

⑲ Check/adjust attenuation compensation.
(ATT : ÷10, ÷100)

a. Set the input coupling switch to DC.

b. Connect the square-wave generator to the CH1 (CH2) input terminal check for a square wave that is flat (flat top) under the following settings.

ATT	VOLTS/DIV	Square-wave generator output
÷ 10	0.1 V	0.5 V
÷ 100	1 V	5 V

c. Adjust the trimmer capacitors (refer to the circuit board illustration with adjustment location - page 27) for a square wave that is flat (flat top) under the following settings.

ATT	VOLTS/DIV	Square-wave generator output	Adjust CH1 (CH2)
÷ 10	0.1 V	0.5 V	CV4 (CV104)
÷ 100	1 V	5 V	CV7 (CV107)

⑳ Check/adjust input capacity (ATT: ÷ 10, ÷ 100).

a. Connect the L-C meter to the input connector.

b. Check the input capacity for approximately 23 pF.

c. Adjust the trimmer capacitors for a 2 pF input capacity under the following settings.

ATT	VOLTS/DIV	Adjust CH1 (CH2)
÷ 1	5 mV	—
÷ 10	0.1 V	CV3 (CV103)
÷ 100	1 V	CV6 (CV106)

(21) X-Y operation

For V-212, V-222, V-422

21-1 Check/adjust X gain.

a. Set the TIME/DIV switch to X-Y, the input coupling switch of CH1 to AC, the input coupling switch of CH2 to GND.

b. Set the VOLTS/DIV switch to the 10 mV position.

c. Connect the standard amplitude calibrator to the CH1 input connector.

d. Set the standard amplitude calibrator for 50 mV.

e. Check for a display of five divisions.

f. Adjust the X GAIN adjustment RV550 for a display of five divisions within 6 %.

For V-211

21-2 Check/adjust X gain.

a. Set the TIME/DIV switch to X-Y, the trig SOURCE switch to EXT ⊠, the input coupling switch of vertical INPUT to GND.

b. Connect the standard amplitude calibrator to the EXT TRIG OR ⊠ INput connector.

c. Set the standard amplitude calibrator for 1 V.

d. Check for a display of five divisions.

e. Adjust the X GAIN adjustment RV550 for a display of five divisions within 6 %.

21-3 Check/adjust X position center.

a. Set the TIME/DIV switch to the X-Y position, and the horizontal

POSITION control to the midposition, the input coupling switch of CH1 to GND.

b. Check to see that the round spot is near the center graticule and is within ±0.2 division against horizontal line.

c. Adjust the X CENT adjustment RV85 to the position spot at the center.

TRIGGER SYSTEM

(22) Check/adjust TRIG CENT.

a. Set the TRIG SOURCE switch to INT, the INT TRIG switch to CH1, the TRIG SLOPE knob push in, the VOLTS/DIV switch to 50 mV, the TIME/DIV switch to 10 μs.

b. Connect the sine-wave generator to the input connector for a 0.5 div (50 kHz).

c. Set the TRIG LEVEL knob to the midposition.

d. Adjust RV420 so that synchronization is effected on the waveform, 0.5 div on the screen.

e. Next, set the TRIG SLOPE to - (pulled out state) and insure that the waveform is triggered. After confirmation, leave the TRIG SLOPE in depressed state. Readjust when stepped out.

(23) Check/adjust CH2 TRIG BAL.

a. Set the VOLTS/DIV switch to 50 mV (CH1 and CH2), the TIME/DIV switch to 10 μs, the TRIG SOURCE switch to INT, the INT TRIG switch to VERT MODE, the V.MODE switch to ALT, and the CH1 POSITION knob to the midposition.

b. Connect the sine-wave generator to the input connectors (CH1 and CH2) for a 5 div (50 kHz).

c. Adjust CH2 POSITION control so that CH2 waveform comes to CH1.

d. Next, adjust RV185 so that both waveforms (CH1 and CH2) coincides.

CALIBRATOR

(24) Check/adjust CAL terminal (0.5 Vp-p, 1 kHz).

a. Connect the CAL terminal to the digital multimeter, short the terminal 1 to 3 of the connector (P1206).

b. Check for the CAL output of 0.5 V, within 1 %.

c. Adjust the 0.5 V adjustment RV1201 for the CAL output of 0.495 to 0.505 V.

5. SEMICONDUCTOR LEAD CONFIGURATIONS

Lead configurations and case styles are typical, but may vary due to vendor changes or instrument modifications.

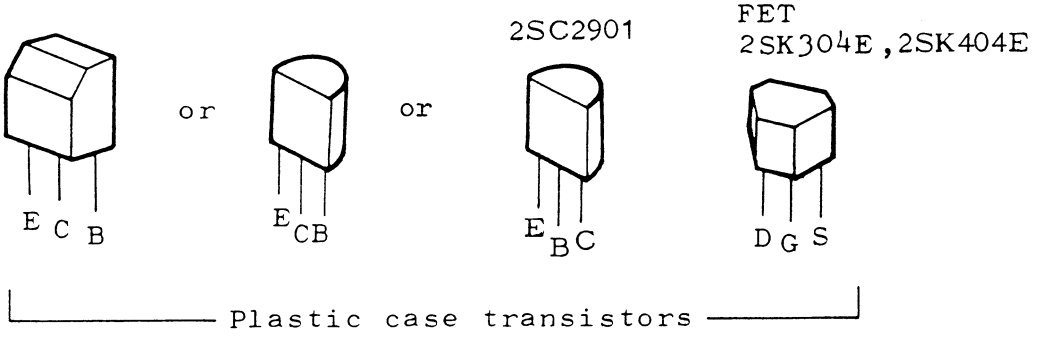

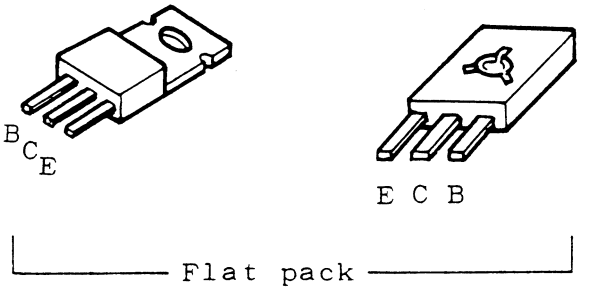

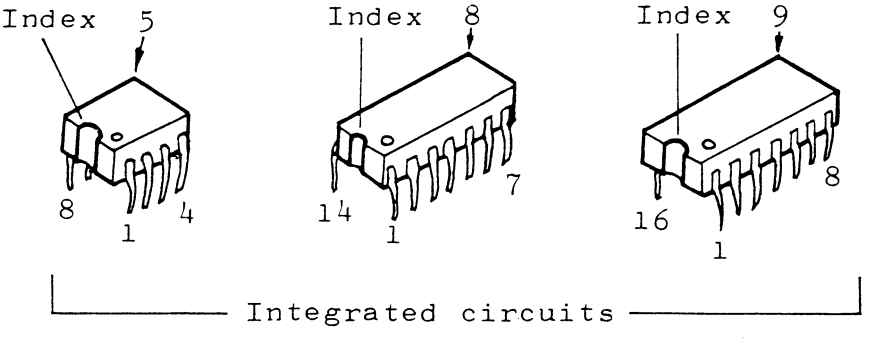

1SS83

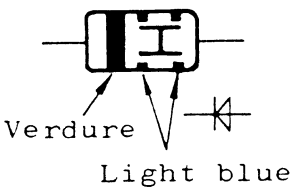

MA161

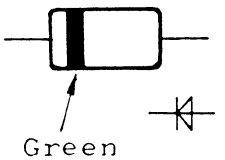

HZ3B, 5B, 7B, 12B
Type No. (Navy blue)

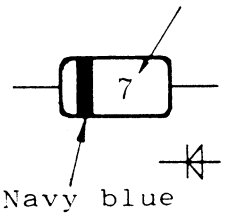

1SS133

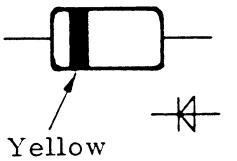

V06C

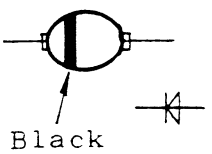

S5566B

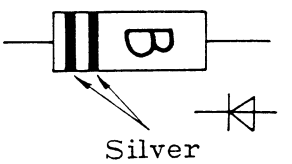

S5566J

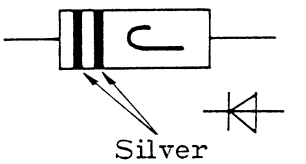

Y-10GA

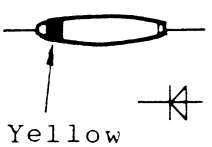

SR503D

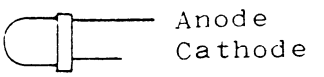

1SS110

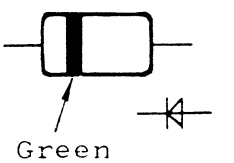

6. CIRCUIT DESCRIPTION

— Introduction —

This section of the manual contains a description of the circuitry used in V-211/V-212/V-222/V-422 Oscilloscope.
The block diagram (p. 31) shows the overall relationship between all of the circuits. Complete schematics of each circuit are also given in section Schematic diagrams (p. 51 to 129). Refer to these diagrams throughout the following circuit description for electrical values and relationships.

CHANNELS 1 and 2 VERTICAL PREAMP

Input signals for vertical deflection on the CRT can be connected to the "CH1 OR X " and (or) "CH2 OR Y " input connectors. In the X-Y mode of operation, CH1 input signal provides the horizontal (X-axis) deflection and CH2 input signal provides the vertical (Y-axis) deflection.
The Channel 1 and 2 Vertical Preamp circuits provide control of input coupling, vertical deflection factor, DC balance, vertical position and vertical gain.
They also contain a stage to provide a sample of the input signal to the Trigger Preamp circuit for internal triggering from the Channel 1 and (or) Channel 2 signal only.

VERTICAL SWITCHING CIRCUIT

The vertical switching circuit determines whether the CH1 or CH2 or both Vertical Preamp output signals are connected to the Vertical Output Amplifier circuit (through the Delay Line Driver and Delay Line stages: V-422 only).
In the ALT and CHOP modes, both channels are alternately displayed on a shared time basis.

VERTICAL OUTPUT AMPLIFIER

The Vertical Output Amplifier circuit provides the final amplification for the signal before it is applied to the vertical deflection plates of the CRT.

TRIGGER PREAMP

The Trigger Preamp circuit amplifies the internal trigger signal to the

level necessary to drive the Trigger Generator circuit.
Input signal for the Trigger Preamp circuit is obtained by sampling the signal applied to Channel 1 or the composite vertical signal from the Vertical Switching circuit.
This circuit also provides a signal to the Horizontal Amplifier for X-Y mode operation.

TRIGGER GENERATOR

The Trigger Generator circuit produces trigger pulses to start the Sweep Generator circuit. These trigger pulses are derived either from the internal trigger signal from the vertical deflection system, an external signal connected to the EXT TRIG INput connector or a sample of the line voltage applied to the instrument.
Controls are provided in this circuit to select trigger level, slope and source.
The Trigger MODE switch determines the operating mode for the trigger circuit. In the NORM Trig position, a sweep is produced only when a trigger pulse is received from the Trigger Generator circuit. Operation in the AUTO Trig mode is the same mode as NORM Trig mode, except that a free-running trace is displayed when a trigger pulse is not present or when the amplitude of the trigger signal is not adequate.

SWEEP GENERATOR

The Sweep Generator circuit produces a sawtooth voltage which is amplified by the Horizontal Amplifier circuit to provide horizontal deflection on the CRT. This sawtooth voltage is generated on command (trigger pulse) from the Trigger Generator circuit.
The Sweep Generator circuit also produces an unblanking gate to unblank the CRT during sweep time.

HORIZONTAL AMPLIFIER

The Horizontal Amplifier circuit provides the output signal to the CRT horizontal deflection plates. In all positions of the TIME/DIV select switch except X-Y, the horizontal deflection signal is a sawtooth from the Sweep Generator circuit. In the X-Y position, the horizontal deflection

signal is obtained from the Channel 1 Vertical Preamp (or X-SIGNAL PREAMP : V-211 only) through the Trigger Preamp circuit. In addition, the horizontal amplifier contains the horizontal magnifier and the horizontal positioning circuits.

POWER SUPPLY

The low-voltage Power Supply circuit provides the operating power for this instrument from four regulated supplies and one unregulated supply. The Power Input stage is provided with a Voltage Selector Assembly. This selector allows selection of the nominal operating voltage and regulating range for the instrument.

CALIBRATOR

The Calibrator circuit produces a square-wave output with accurate amplitude and frequency. This output is available as a square-wave voltage at the CAL 0.5 V (1 kHz) connector.

Z AXIS AMPLIFIER

The Z-Axis Amplifier circuit controls the CRT intensity level from several inputs. The effect of these input signals is to either increase or decrease the trace intensity, or to completely blank portions of the display.

CRT CIRCUIT

The CRT Circuit provides the high-voltage and control circuits necessary for operation of the cathode-ray tube (CRT).

① INPUT AMP

CH1 and CH2 INPUT

Symbol	Part Code	Description	Q'ty A	B	C	D
C 1	CQX0068	C, Plastic 400V 0.047μF ±10%	1	1	1	1
C 101	CQX0068	C, Plastic 400V 0.047μF ±10%		1	1	1
S 1	8393985	SW, Lever, SLE623	1	1	1	1
S 101	8393985	SW, Lever, SLE623		1	1	1
S 202	8398985	SW, Lever, SLE623		1	1	1
PEF-622		PCB PB-14	R	R	R	R

CH1 1st ATTENUATOR

Symbol	Part Code	Description	Q'ty A	B	C	D
R 2	RME0860	R, MET Chip 1/8W 470Ω ±5%	1	1	1	1
R 4	RMS0043	R, Metal 1/4W 900kΩ ±0.5%	1	1	1	1
R 5	RME1163	R, Metal 1/4W 111kΩ ±0.5%	1	1	1	1
R 7	RMS0044	R, Metal 1/4W 990kΩ ±0.5%	1	1	1	1
R 8	RME1156	R, Metal 1/4W 10.1kΩ ±0.5%	1	1	1	1
R 9	RME0852	R, MET, Chip 1/8W 10Ω ±5%	1	1	1	1
R 10	RME0864	R, MET, Chip 1/8W 100Ω ±5%	1	1	1	1
R 12	RCE0749	R, Carbon 1/4W 22Ω ±5%	1	1	1	1
C 2	CCG0132	C, Ceramic Chip 50V 22pF ±5%				1
C 5	CCG0139	C, Ceramic Chip 50V 47pF ±5%	1	1	1	1
C 9	CCG0144	C, Ceramic Chip 50V 220pF ±5%	1	1	1	1
C 10	CCG0142	C, Ceramic Chip 50V 82pF ±5%	1	1	1	1
CV 3	CVE0046	C, Variable ECR-HA010A11	1	1	1	1
CV 4	CVE0050	C, Variable ECR-HA007A11	1	1	1	1
CV 6	CVE0046	C, Variable ECR-HA010A11	1	1	1	1
CV 7	CVE0048	C, Variable ECR-HA003A11	1	1	1	1
ATT 1	8398872	SW, Rotary ADR-255S	1	1	1	1

CH1 INPUT AMP and 2nd ATTENUATOR

Symbol	Part Code	Description	Q'ty A	B	C	D
R 16	RME1168	R, Metal 1/4W 500kΩ ±0.5%	1	1	1	1
R 17	RME1168	R, Metal 1/4W 500kΩ ±0.5%	1	1	1	1
R 18	RCE0757	R, Carbon 1/4W 100Ω ±5%	1	1	1	1
R 19	RCE0793	R, Carbon 1/4W 100kΩ ±5%	1	1	1	1
R 20	RCE0793	R, Carbon 1/4W 100kΩ ±5%	1	1	1	1
R 21	RSE0434	R, Solid 1/4W 10MΩ ±5%	1	1	1	1
R 22	RCE0791	R, Carbon 1/4W 68kΩ ±5%	1	1	1	1
R 23	RCE0777	R, Carbon 1/4W 4.7kΩ ±5%	1	1	1	1
R 25	RCE0757	R, Carbon 1/4W 100Ω ±5%	1	1	1	1
R 25	RCE0755	R, Carbon 1/4W 68Ω ±0.5%	1	1	1	1
R 26	RME1081	R, Metal 1/4W 5.62kΩ ±1%	1	1	1	1
R 26	RME1079	R, Metal 1/4W 3.92kΩ ±1%				1
R 30	RCE0773	R, Carbon 1/4W 2.2kΩ ±5%				1
R 30	RCE0775	R, Carbon 1/4W 3.3kΩ ±5%	1	1	1	1
R 32	RCE0753	R, Carbon 1/4W 47Ω ±5%				1
R 34	RME1145	R, Metal 1/4W 60.0Ω ±0.5%	1	1	1	1
R 35	RCE0766	R, Carbon 1/4W 560Ω ±5%	1	1	1	1
R 36	RME1154	R, Metal 1/4W 600Ω ±0.5%	1	1	1	1
R 33	RCE0762	R, Carbon 1/4W 270Ω ±5%	1	1	1	1
R 40	RCE0745	R, Carbon 1/4W 10Ω ±5%	1	1	1	1
R 41	RCE0745	R, Carbon 1/4W 10Ω ±5%	1	1	1	1
R 42	RCE0764	R, Carbon 1/4W 390Ω ±5%	1	1	1	1
R 43	RCE0767	R, Carbon 1/4W 680Ω ±5%	1	1	1	1
R 44	RCE0767	R, Carbon 1/4W 680Ω ±5%	1	1		
R 44	RCE0765	R, Carbon 1/4W 470Ω ±5%			1	1
R 45	RCE0745	R, Carbon 1/4W 10Ω ±5%	1	1	1	1
R 46	RME1157	R, Metal 1/4W 16.0kΩ ±0.5%	1	1	1	1
R 47	RME1162	R, Metal 1/4W 80.0kΩ ±0.5%	1	1	1	1
R 48	RME1155	R, Metal 1/4W 4.00kΩ ±0.5%			1	1
RM 43	3173846	R, Block For ATT	1	1	1	1
C 16	CCD0286	C, Ceramic 500V 1000pF +100 -0%	1	1	1	1
C 18	CCC0996	C, Ceramic 50V 2pF ±0.25%	1	1	1	1
C 20	CCC1014	C, Ceramic 50V 47pF ±5%	1	1	1	1
C 23	CQA0091	C, Plastic 50V 0.001μF ±10%	1	1	1	1
C 25	CCC1014	C, Ceramic 50V 47pF ±5%	1	1	1	1
C 26	CES0028	C, Alelyc 10V 47μF ±20%	1	1	1	1
C 30	CES0028	C, Alelyc 10V 47μF ±20%	1	1	1	1
C 32	CCC1002	C, Ceramic 50V 10pF ±0.5%				1
C 40	CES0028	C, Alelyc 10V 47μF ±20%	1	1	1	1
C 42	CCC1007	C, Ceramic 50V 22pF ±5%	1	1	1	1
C 44	CES0028	C, Alelyc 10V 47μF ±20%	1	1	1	1
C 53	CEX0563	C, Alelyc 16V 10μF BP			1	1
RV 22	RNE0057	VR, Metal EVN49C00YB54 (50K)	1	1	1	1
RV 33	RNE0048	VR, Metal EVN39C00YB22 (200)	1	1	1	1
TR 24	HTK0099	Transistor 2SK404E	1	1	1	1
TR 30	HTC0148	Transistor 2SC458C	1	1	1	1
TR 30	HTC0557	Transistor 2SC1674K				1
TR 40	HTA0224	Transistor 2SA1029D	1	1	1	1
L 34	TLE0107	Coil ELE-VR47MA	1	1	1	1
IC 16	8397023	IC LF411CN	1	1	1	1
D 16	HDS0437	Diode 1SS133	1	1	1	1
D 21	HDS0477	Diode 1SS110	1	1	1	1
D 51	HDS0407	Diode SR503D (RED)			1	1

DC OFFSET NETWORK

Symbol		Part Code	Description				Q'ty A	B	C	D
R	48	RME1157	R, Metal	1/4W	16.0kΩ	±0.5%			1	1
R	49	RME1155	R, Metal	1/4W	4.00kΩ	±0.5%			1	1
R	50	RME1157	R, Metal	1/4W	16.0kΩ	±0.5%			1	1
R	51	RCE0769	R, Carbon	1/4W	1kΩ	±5%			1	1
R	52	RME1069	R, Metal	1/4W	562Ω	±5%			1	1
R	53	RCE0777	R, Carbon	1/4W	4.7kΩ	±5%			1	1
R	54	RCE0769	R, Carbon	1/4W	1kΩ	±5%			1	1
R	55	RCE0771	R, Carbon	1/4W	1.5kΩ	±5%			1	1
R	56	RME1157	R, Metal	1/4W	16.0kΩ	±0.5%			1	1
R	57	RME1155	R, Metal	1/4W	4.00kΩ	±0.5%			1	1
RV	61	8348452	VR, Carbon	EVH-CCAK20B14			1	1		
RV	61	RDE0003	VR, Carbon	EVH-YK3325B14					1	1

CH2 1st ATTENUATOR

Symbol		Part Code	Description				Q'ty A	B	C	D
R	102	RME0860	R, MET, Chip	1/8W	47Ω	±5%		1	1	1
R	104	RMS0043	R, Metal	1/4W	900Ω	±0.5%		1	1	1
R	105	RME1163	R, Metal	1/4W	111kΩ	±0.5%		1	1	1
R	107	RMS0044	R, Metal	1/4W	990kΩ	±1%		1	1	1
R	108	RME1156	R, Metal	1/4W	10.1kΩ	±0.5%		1	1	1
R	109	RME0852	R, MET, Chip	1/8W	10Ω	±5%		1	1	1
R	110	RME0864	R, MET, Chip	1/8W	100Ω	±5%		1	1	1
R	112	RCE0749	R, Carbon	1/4W	22Ω	±5%		1	1	1
C	102	CCG0132	C, CER, Chip	50V	22pF	±5%				1
C	105	CCG0139	C, CER, Chip	50V	47pF	±5%		1	1	1
C	109	CCG0144	C, CER, Chip	50V	220pF	±5%		1	1	1
C	110	CCG0142	C, CER, Chip	50V	82pF	±5%		1	1	1
CV	103	CVE0046	C, Variable	ECR-HA010A11				1	1	1
CV	104	CVE0050	C, Variable	ECR-HA007A11				1	1	1
CV	106	CVE0046	C, Variable	ECR-HA010A11				1	1	1
CV	107	CVE0048	C, Variable	ECR-HA003A11				1	1	1
ATT	101	8398872	SW, Rotary	ADR-255S				1	1	1

CH2 INPUT AMP and 2nd ATTENUATOR

Symbol		Part Code	Description				Q'ty A	B	C	D
R	116	RME1168	R, Metal	1/4W	500kΩ	±0.5%		1	1	1
R	117	RME1168	R, Metal	1/4W	500kΩ	±0.5%	1	1	1	1
R	118	RCE0757	R, Carbon	1/4W	100Ω	±5%		1	1	1
R	119	RCE0793	R, Carbon	1/4W	100kΩ	±5%		1	1	1
R	120	RCE0793	R, Carbon	1/4W	100kΩ	±5%		1	1	1
R	121	RSE0434	R, Solid	1/4W	10MΩ	±5%		1	1	1
R	122	RCE0791	R, Carbon	1/4W	68kΩ	±5%		1	1	1
R	123	RCE0777	R, Carbon	1/4W	4.7kΩ	±5%		1	1	1
R	125	RCE0757	R, Carbon	1/4W	100Ω	±5%			1	1
R	125	RCE0755	R, Carbon	1/4W	68Ω	±5%				1
R	126	RME1081	R, Metal	1/4W	5.62kΩ	±1%		1	1	
R	126	RME1079	R, Metal	1/4W	3.92kΩ	±1%				1
R	130	RCE0775	R, Carbon	1/4W	3.3kΩ	±5%		1	1	
R	130	RCE0773	R, Carbon	1/4W	2.2kΩ	±5%				1
R	132	RCE0753	R, Carbon	1/4W	47Ω	±5%				1
R	133	RCE0762	R, Carbon	1/4W	270Ω	±5%		1	1	1
R	134	RME1145	R, Metal	1/4W	60.0Ω	±0.5%		1	1	1
R	135	RCE0766	R, Carbon	1/4W	560Ω	±5%		1	1	1
R	136	RME1154	R, Metal	1/4W	600Ω	±0.5%		1	1	1
R	140	RCE0745	R, Carbon	1/4W	10Ω	±5%		1	1	1
R	141	RCE0745	R, Carbon	1/4W	10Ω	±5%		1	1	1
R	142	RCE0764	R, Carbon	1/4W	390Ω	±5%		1	1	1
R	143	RCE0767	R, Carbon	1/4W	680Ω	±5%		1	1	1
R	144	RCE0767	R, Carbon	1/4W	680Ω	±5%		1	1	
R	144	RCE0766	R, Carbon	1/4W	560Ω	±5%				1
R	145	RCE0745	R, Carbon	1/4W	10Ω	±5%		1	1	1
R	146	RME1157	R, Metal	1/4W	16.0kΩ	±0.5%		1	1	1
R	147	RME1162	R, Metal	1/4W	80.0kΩ	±0.5%		1	1	1
R	148	RME1155	R, Metal	1/4W	4.00kΩ	±0.5%		1	1	1
R	151	RCE0769	R, Carbon	1/4W	1kΩ	±5%			1	1
RM	143	3173846	R, Block For	ATT				1	1	1
C	116	CCD0286	C, Ceramic	500V	1000pF	$^{+100}_{-0}$%		1	1	1
C	118	CCC0996	C, Ceramic	50V	2pF	±0.25%		1	1	1
C	120	CCC1014	C, Ceramic	50V	47pF	±5%		1	1	1
C	123	CQA0091	C, Plastic	50V	1000pF	±10%		1	1	1
C	125	CCC1014	C, Ceramic	50V	47pF	±5%		1	1	1
C	126	CES0028	C, Alelyc	10V	47μF	±20%		1	1	1
C	130	CES0028	C, Alelyc	10V	47μF	±20%		1	1	1
C	132	CCC1002	C, Ceramic	50V	10pF	±0.5%				1
C	140	CES0028	C, Alelyc	10V	47μF	±20%		1	1	1
C	142	CCC1007	C, Ceramic	50V	22pF	±5%		1	1	1
C	144	CES0028	C, Alelyc	10V	47μF	±20%		1	1	1
RV	122	RNE0057	VR, Metal	EVN49C00YB54 (50k)				1	1	1
RV	133	RNE0048	VR, Metal	EVN39C00YB22 (200)				1	1	1
TR	124	HTK0099	Transistor	2SK404E				1	1	1
TR	130	HTC0148	Transistor	2SC458C				1	1	
TR	130	HTC0557	Transistor	2SC1674K						1
TR	140	HTA0224	Transistor	2SA1029D				1	1	1
IC	116	8397023	IC	LF411CN				1	1	1
L	134	TLE0107	Coil	ELE-VR47MA				1	1	1
D	116	HDS0437	Diode	1SS133				1	1	1
D	121	HDS0477	Diode	1SS110				1	1	1
D	151	HDS0407	Diode	SR503D (RED)						1

PANEL and OTHERS

Symbol		Part Code	Description				Q'ty			
							A	B	C	D
R	13	RCE0753	R, Carbon	1/4W	47Ω	±5%				1
R	113	RCE0753	R, Carbon	1/4W	47Ω	±5%				1
C	13	CCC1004	C, Ceramic	50V	15 pF	±5%				1
C	113	CCC1004	C, Ceramic	50V	15 pF	±5%				1
J	1	JHB0088	CON, Coax	BNC071			1	1	1	1
J	5		Jack	TJ-10A	(RED)				1	1
J	101	JHD0088	CON, Coax	BNC071				1	1	1

CH1 PREAMP

Symbol	Part Code	Description	Q'ty A	Q'ty B	Q'ty C	Q'ty D
R 59	RCE0761	R, Carbon 1/4W 22Ω ±5%	1	1	1	
R 59	RCE0759	R, Carbon 1/4W 150Ω ±5%				1
R 60	RCE0797	R, Carbon 1/4W 220kΩ ±5%	1	1	1	
R 60	RCE0795	R, Carbon 1/4W 150kΩ ±5%				1
R 61	RCE0745	R, Carbon 1/4W 10Ω ±5%	1	1	1	
R 61	RCE0752	R, Carbon 1/4W 39Ω ±5%				1
R 62	RCE0755	R, Carbon 1/4W 68Ω ±5%	1	1	1	
R 62	RCE0753	R, Carbon 1/4W 47Ω ±5%				1
R 63	RCE0775	R, Carbon 1/4W 3.3kΩ ±5%	1	1	1	
R 63	RCE0773	R, Carbon 1/4W 2.2kΩ ±5%				1
R 64	RCE0775	R, Carbon 1/4W 3.3kΩ ±5%	1	1	1	
R 64	RCE0773	R, Carbon 1/4W 2.2kΩ ±5%				1
R 65	RCE0781	R, Carbon 1/4W 10kΩ ±5%	1	1	1	1
R 66	RCE0785	R, Carbon 1/4W 22kΩ ±5%	1	1	1	1
R 67	RCE0578	R, Carbon 1/4W 120Ω ±5%	1	1	1	1
R 68	RCE0749	R, Carbon 1/4W 22Ω ±5%	1	1	1	1
R 69	RCE0770	R, Carbon 1/4W 1.2kΩ ±5%	1	1	1	
R 69	RCE0767	R, Carbon 1/4W 680Ω ±5%				1
R 70	RCE0770	R, Carbon 1/4W 1.2kΩ ±5%	1	1	1	
R 70	RCE0767	R, Carbon 1/4W 680Ω ±5%				1
R 71	RCE0749	R, Carbon 1/4W 22Ω ±5%	1	1	1	1
R 72	RCE0753	R, Carbon 1/4W 47Ω ±5%	1	1	1	1
R 73	RME1070	R, Metal 1/4W 681Ω ±1%	1	1	1	
R 73	RME1191	R, Metal 1/4W 432Ω ±1%				1
R 74	RME1070	R, Metal 1/4W 681Ω ±1%	1	1	1	
R 74	RME1191	R, Metal 1/4W 432Ω ±1%				1
R 75	RCE0775	R, Carbon 1/4W 3.3kΩ ±5%	1	1	1	1
R 76	RCE0765	R, Carbon 1/4W 470Ω ±5%	1	1	1	1
R 77	RCE0753	R, Carbon 1/4W 47Ω ±5%	1	1	1	1
C 61	CCC1011	C, Ceramic 50V 33pF ±5%				1
C 61	CCC1007	C, Ceramic 50V 10pF ±0.5pF	1	1	1	
C 67	CQA0099	C, Plastic 50V 0.022μF ±10%	1	1	1	
C 67	CQA0097	C, Plastic 50V 0.001μF ±10%				1
C 69	CCC1365	C, Ceramic 50V 680pF ±10%	1	1	1	1
C 71	CCC1365	C, Ceramic 50V 680pF ±10%	1	1	1	1
C 72	CCC1030	C, Ceramic 50V 10000pF ±10%	1	1	1	1
C 77	CCC0997	C, Ceramic 50V 3pF ±0.25pF	1	1	1	1
RV 62	RNE0049	VR, Metal EVN39C00YB12 (100)	1	1	1	1
RV 63	RNE0047	VR, Metal EVN39C00YB54 (50K)	1	1	1	1
TR 61	HTC0168	Transistor 2SC535C	1	1	1	1
TR 62	HTC0168	Transistor 2SC535C	1	1	1	1
TR 63	HTA0224	Transistor 2SA1029D	1	1	1	1
TR 64	HTA0224	Transistor 2SA1029D	1	1	1	1

CH2 PREAMP and INVERT SW CKT

Symbol	Part Code	Description	Q'ty A	Q'ty B	Q'ty C	Q'ty D
R 159	RCE0761	R, Carbon 1/4W 220Ω ±5%		1	1	
R 159	RCE0759	R, Carbon 1/4W 150Ω ±5%				1
R 160	RCE0797	R, Carbon 1/4W 220kΩ ±5%		1	1	
R 160	RCE0795	R, Carbon 1/4W 150kΩ ±5%				1
R 161	RCE0745	R, Carbon 1/4W 10Ω ±5%		1	1	1
R 162	RCE0753	R, Carbon 1/4W 47Ω ±5%				1
R 162	RCE0755	R, Carbon 1/4W 68Ω ±5%		1	1	
R 163	RCE0775	R, Carbon 1/4W 3.3kΩ ±5%		1	1	
R 163	RCE0773	R, Carbon 1/4W 2.2kΩ ±5%				1
R 164	RCE0775	R, Carbon 1/4W 3.3kΩ ±5%		1	1	
R 164	RCE0773	R, Carbon 1/4W 2.2kΩ ±5%				1
R 165	RCE0781	R, Carbon 1/4W 10kΩ ±5%		1	1	1
R 166	RCE0785	R, Carbon 1/4W 22kΩ ±5%		1	1	1
R 167	RCE0758	R, Carbon 1/4W 120Ω ±5%		1	1	1
R 168	RCE0749	R, Carbon 1/4W 22Ω ±5%		1	1	1
R 169	RCE0767	R, Carbon 1/4W 680Ω ±5%				1
R 169	RCE0770	R, Carbon 1/4W 2.2kΩ ±5%		1	1	
R 170	RCE0770	R, Carbon 1/4W 1.2kΩ ±5%		1	1	
R 170	RCE0767	R, Carbon 1/4W 680Ω ±5%				1
R 171	RCE0749	R, Carbon 1/4W 22Ω ±5%		1	1	1
R 172	RCE0753	R, Carbon 1/4W 47Ω ±5%		1	1	1
R 173	RME1070	R, Metal 1/4W 681Ω ±1%		1	1	
R 173	RME1191	R, Metal 1/4W 432Ω ±1%				1
R 174	RME1070	R, Metal 1/4W 681Ω ±1%		1	1	
R 174	RME1191	R, Metal 1/4W 432Ω ±1%				1
R 175	RCE0775	R, Carbon 1/4W 3.3kΩ ±5%		1	1	1
R 176	RCE0765	R, Carbon 1/4W 470Ω ±5%		1	1	1
R 177	RCE0765	R, Carbon 1/4W 470Ω ±5%		1	1	1
R 178	RCE0775	R, Carbon 1/4W 3.3kΩ ±5%		1	1	1
R 179	RCE0753	R, Carbon 1/4W 47Ω ±5%		1	1	1
C 167	CQA0099	C, Plastic 50V 0.022μF ±10%		1	1	
C 167	CQA0097	C, Plastic 50V 0.01μF ±10%				1
C 169	CCC1365	C, Ceramic 50V 680pF ±10%		1	1	1
C 171	CCC1365	C, Ceramic 50V 680pF ±10%		1	1	1
C 172	CCC1030	C, Ceramic 50V 10000pF ±10%		1	1	1
C 179	CCC1030	C, Ceramic 50V 10000pF ±10%		1	1	1
RV 161	RDE0003	VR, Carbon EVH-YK3325B14		1	1	1
RV 162	RNE0049	VR, Metal EVN39C00YB12 (100)		1	1	1
RV 163	RNE0047	VR, Metal EVN39C00YB54 (50K)		1	1	1
CV 161	CVE0047	C, Variable ECR-HA020D11		1	1	
CV 161	CVE0049	C, Variable ECR-HA040E11				1
TR 161	HTC0168	Transistor 2SC535C		1	1	1
TR 162	HTC0168	Transistor 2SC535C		1	1	1
TR 163	HTA0224	Transistor 2SA1029D		1	1	1
TR 164	HTA0224	Transistor 2SA1029D		1	1	1
TR 165	HTA0224	Transistor 2SA1029D		1	1	1
TR 166	HTA0224	Transistor 2SA1029D		1	1	1

DIODE GATE and VERTICAL AMP

Symbol	Part Code	Symbol				Q'ty A	B	C	D
R 201	RCE0773	R, Carbon	1/4W	2.2kΩ	±5%		1	1	
R 201	RCE0770	R, Carbon	1/4W	1.2kΩ	±5%				1
R 202	RCE0773	R, Carbon	1/4W	2.2kΩ	±5%		1	1	
R 202	RCE0770	R, Carbon	1/4W	1.2kΩ	±5%				1
R 203	RME1066	R, Metal	1/4W	332Ω	±5%	1	1	1	
R 203	RME1063	R, Metal	1/4W	182Ω	±5%				1
R 204	RME1066	R, Metal	1/4W	332Ω	±5%	1	1	1	
R 204	RME1063	R, Metal	1/4W	182Ω	±5%				1
R 205	RCE0769	R, Carbon	1/4W	1kΩ	±5%	1	1	1	
R 205	RCE0766	R, Carbon	1/4W	560Ω	±5%				1
R 206	RCE0769	R, Carbon	1/4W	1kΩ	±5%	1	1	1	1
R 207	RCE0785	R, Carbon	1/4W	22kΩ	±5%	1	1	1	
R 207	RCE0782	R, Carbon	1/4W	12kΩ	±5%				1
R 208	RME1066	R, Metal	1/4W	332Ω	±5%	1	1	1	
R 208	RME1064	R, Metal	1/4W	221Ω	±5%				1
R 209	RME1066	R, Metal	1/4W	332Ω	±5%	1	1	1	
R 209	RME1064	R, Metal	1/4W	221Ω	±5%				1
R 210	RCE0789	R, Carbon	1/4W	47kΩ	±5%				1
R 210	RCE0791	R, Carbon	1/4W	68kΩ	±5%	1	1	1	
R 211	RCE0766	R, Carbon	1/4W	560Ω	±5%	1	1	1	
R 211	RCE0768	R, Carbon	1/4W	820Ω	±5%				1
R 212	RCE0766	R, Carbon	1/4W	560Ω	±5%	1	1	1	
R 212	RCE0768	R, Carbon	1/4W	820Ω	±5%				1
R 213	RME1107	R, Metal	1/4W	86.6Ω	±1%				1
R 213	RCE0753	R, Carbon	1/4W	47Ω	±5%	1	1	1	
R 214	RME1107	R, Metal	1/4W	86.6Ω	±1%				1
R 214	RCE0753	R, Carbon	1/4W	47Ω	±5%	1	1	1	
R 215	RCE0773	R, Carbon	1/4W	2.2kΩ	±5%	1	1	1	
R 215	RCE0772	R, Carbon	1/4W	1.8kΩ	±5%				1
R 216	RCE0773	R, Carbon	1/4W	2.2kΩ	±5%	1	1	1	
R 216	RCE0772	R, Carbon	1/4W	1.8kΩ	±5%				1
R 217	RCE0761	R, Carbon	1/4W	220Ω	±5%				1
C 201	CCC1030	C, Ceramic	50V	10000pF	±10%		1	1	1
C 207	CCC1014	C, Ceramic	50V	47pF	±5%	1	1	1	
C 207	CCC1025	C, Ceramic	50V	100pF	±5%				1
C 210	CEX0563	C, Alelyc	16V	10μF	BP	1	1	1	1
C 217	CCC1002	C, Ceramic	50V	10pF	±0.5pF				1
TR 201	HTC0338	Transistor	2SC1906			1	1	1	1
TR 202	HTC0338	Transistor	2SC1906			1	1	1	1
D 201	HDS0437	Diode	1SS133				1	1	1
D 202	HDS0437	Diode	1SS133				1	1	1
D 203	HDS0437	Diode	1SS133				1	1	1
D 204	HDS0437	Diode	1SS133				1	1	1
D 205	HDS0437	Diode	1SS133				1	1	1
D 206	HDS0437	Diode	1SS133				1	1	1
D 207	HDS0437	Diode	1SS133				1	1	1
D 208	HDS0437	Diode	1SS133				1	1	1

VERTICAL SWITCHING MULTI

Symbol	Part Code	Description				Q'ty A	B	C	D
R 221	RCE0750	R, Carbon	1/4W	27Ω	±5%		1	1	
R 221	RCE0758	R, Carbon	1/4W	120Ω	±5%				1
R 222	RCE0761	R, Carbon	1/4W	220Ω	±5%		1	1	
R 222	RCE0758	R, Carbon	1/4W	120Ω	±5%				1
R 223	RCE0750	R, Carbon	1/4W	27Ω	±5%		1	1	
R 223	RCE0748	R, Carbon	1/4W	18Ω	±5%				1
R 224	RCE0761	R, Carbon	1/4W	220Ω	±5%		1	1	
R 224	RCE0758	R, Carbon	1/4W	120Ω	±5%				1
R 225	RCE0789	R, Carbon	1/4W	47kΩ	±5%		1	1	1
R 226	RCE0749	R, Carbon	1/4W	10Ω	±5%	1	1	1	1
R 228	RCE0789	R, Carbon	1/4W	47kΩ	±5%		1	1	1
T 229	RCE0776	R, Carbon	1/4W	3.9kΩ	±5%		1	1	1
R 230	RCE0777	R, Carbon	1/4W	4.7kΩ	±5%		1	1	1
R 231	RCE0777	R, Carbon	1/4W	4.7kΩ	±5%		1	1	1
R 232	RCE0769	R, Carbon	1/4W	1kΩ	±5%		1	1	
R 232	RCE0768	R, Carbon	1/4W	820Ω	±5%				1
R 233	RCE0781	R, Carbon	1/4W	10kΩ	±5%		1	1	1
R 234	RCE0781	R, Carbon	1/4W	10kΩ	±5%		1	1	1
R 235	RCE0789	R, Carbon	1/4W	47kΩ	±5%		1	1	1
R 236	RCE0789	R, Carbon	1/4W	47kΩ	±5%		1	1	1
R 237	RCE0789	R, Carbon	1/4W	47kΩ	±5%		1	1	1
R 390	RCE0781	R, Carbon	1/4W	10kΩ	±5%			1	1
R 391	RCE0765	R, Carbon	1/4W	740Ω	±5%			1	1
R 392	RCE0778	R, Carbon	1/4W	5.6kΩ	±5%			1	1
R 393	RCE0767	R, Carbon	1/4W	680Ω	±5%			1	1
R 394	RCE0775	R, Carbon	1/4W	3.3kΩ	±5%			1	1
R 395	RCE0775	R, Carbon	1/4W	3.3kΩ	±5%			1	1
R 396	RCE0785	R, Carbon	1/4W	22Ω	±5%			1	1
C 221	CCC1160	C, Ceramic	50V	330pF	±10%		1	1	1
C 222	CES0028	C, Alelyc	10V	47μF	±20%		1	1	1
C 223	CCC1160	C, Ceramic	50V	330pF	±10%		1	1	1
C 224	CES0028	C, Alelyc	10V	47μF	±20%	1	1	1	1
TR 232	HTA0224	Transistor	2SA1029D				1	1	1
TR 390	HTC0148	Transistor	2SC458C					1	1
TR 396	HTC0148	Transistor	2SC458C					1	1
IC 222	IDH0467	IC	HD74LS00P				1	1	1
IC 226	IDH0586	IC	HD74LS74AP			1	1	1	1
D 221	HDS0437	Diode	1SS133				1	1	1
D 223	HDS0437	Diode	1SS133				1	1	1
D 224	HDS0437	Diode	1SS133				1	1	1
D 225	HDS0437	Diode	1SS133				1	1	1
D 226	HDS0437	Diode	1SS133				1	1	1
D 230	HDS0437	Diode	1SS133				1	1	1
D 231	HDS0437	Diode	1SS133				1	1	1
D 394	HDS0437	Diode	1SS133					1	1
D 395	HDS0437	Diode	1SS133					1	1
S 201	3165210	SW, Rotary	SBU 1025				1	1	1
D 243	HDS0437	Diode	1SS133				1	1	1
D 244	HDS0437	Diode	1SS133				1	1	1
D 245	HDH0029	Diode	HZ5B			1	1	1	1

CH1 TRIG PICKOFF and CH1 OUT

Symbol		Part Code	Description				Q'ty A	B	C	D
R	81	RCE0693	R, Carbon	1/2W	100Ω	±5%				1
R	82	RME1107	R, Metal	1/4W	86.6Ω	±1%	1	1	1	1
R	83	RCE0757	R, Carbon	1/4W	100Ω	±5%	1	1	1	1
R	84	RCE0759	R, Carbon	1/4W	150Ω	±5%	1	1	1	1
R	85	RCE0783	R, Carbon	1/4W	15kΩ	±5%		1	1	1
R	86	RCE0771	R, Carbon	1/4W	1.5kΩ	±5%	1	1	1	
R	87	RCE0755	R, Carbon	1/4W	68Ω	±5%		1	1	
R	87	RCE0756	R, Carbon	1/4W	82Ω	±5%	1			
R	87	RCE0751	R, Carbon	1/4W	33Ω	±5%				1
R	88	RCE0777	R, Carbon	1/4W	4.7kΩ	±5%	1	1	1	
R	88	RCE0773	R, Carbon	1/4W	2.2kΩ	±5%				1
R	89	RCE0773	R, Carbon	1/4W	4.7kΩ	±5%	1	1	1	
R	89	RCE0773	R, Carbon	1/4W	2.2kΩ	±5%				1
R	90	RCE0763	R, Carbon	1/4W	330Ω	±5%	1	1	1	
R	90	RCE0745	R, Carbon	1/4W	10Ω	±5%				1
R	91	RCE0763	R, Carbon	1/4W	330Ω	±5%	1	1	1	
R	91	RCE0761	R, Carbon	1/4W	220Ω	±5%				1
R	92	RCE0787	R, Carbon	1/4W	33kΩ	±5%	1	1	1	1
R	93	RCE0773	R, Carbon	1/4W	2.2kΩ	±5%				1
R	93	RCE0777	R, Carbon	1/4W	4.7kΩ	±5%	1	1	1	
R	94	RME1070	R, Metal	1/4W	681Ω	±5%				1
R	94	RCE0771	R, Carbon	1/4W	1.5kΩ	±5%	1	1	1	
R	95	RCE0753	R, Carbon	1/4W	47Ω	±5%	1	1	1	1
R	96	RCE0755	R, Carbon	1/4W	68Ω	±5%	1	1	1	
R	86	RCE0757	R, Carbon	1/4W	100Ω	±5%				1
R	96	RCE0753	R, Carbon	1/4W	47Ω	±5%				1
R	97	RCE0769	R, Carbon	1/4W	1kΩ	±5%	1			
R	97	RCE0773	R, Carbon	1/4W	2.2kΩ	±5%		1	1	
R	97	RCE0781	R, Carbon	1/4W	10kΩ	±5%				1
R	98	RCE0767	R, Carbon	1/4W	680Ω	±5%		1	1	1
R	99	RCE0768	R, Carbon	1/4W	820Ω	±5%		1	1	
R	99	RCE0767	R, Carbon	1/4W	680Ω	±5%				1
C	83	CES0028	C, Alelyc	10V	47μF/LB		1	1	1	1
C	86	CCC1034	C, Ceramic	50V	68 pF	±5%				1
C	86	CCC1365	C, Ceramic	50V	680 pF	±10%	1	1	1	
C	90	CCC1365	C, Ceramic	50V	680 pF	±10%	1	1	1	1
C	91	CCC1365	C, Ceramic	50V	680 pF	±10%	1	1	1	1
C	94	CES0028	C, Alelyc	10V	47μF/LB		1	1	1	1
C	96	CCC1030	C, Ceramic	50V	10000 pF	±10%	1	1	1	1
C	97	CCC1007	C, Ceramic	50V	22 pF	±5%				1
C	97	CCC1027	C, Ceramic	50V	220 pF	±10%		1	1	
RV	85	RNE0051	VR, Metal	EVN39C00YB14 (10K)				1	1	1
TR	85	HTC0168	Transistor	2SC535C			1	1	1	1
TR	86	HTC0168	Transistor	2SC535C			1	1	1	1
TR	87	HTC0148	Transistor	2SC458C			1	1	1	1
D	97	HDH0024	Diode	HZ3B				1	1	1
L	98	TLF0067	Coil	FL-5H101K						1

CH2 TRIG PICKOFF

Symbol		Part Code	Description				Q'ty A	B	C	D
R	181	RCE0757	R, Carbon	1/4W	100Ω	±5%				1
R	184	RCE0759	R, Carbon	1/4W	150Ω	±5%		1	1	1
R	185	RCE0783	R, Carbon	1/4W	15kΩ	±5%		1	1	1
R	186	RCE0771	R, Carbon	1/4W	1.5kΩ	±5%		1	1	
R	186	RCE0753	R, Carbon	1/4W	100Ω	±5%				1
R	187	RCE0755	R, Carbon	1/4W	68Ω	±5%		1	1	
R	187	RCE0751	R, Carbon	1/4W	33Ω	±5%				1
R	188	RCE0777	R, Carbon	1/4W	4.7kΩ	±5%		1	1	
R	188	RCE0773	R, Carbon	1/4W	2.2kΩ	±5%				1
R	189	RCE0777	R, Carbon	1/4W	4.7kΩ	±5%		1	1	
R	189	RCE0773	R, Carbon	1/4W	2.2kΩ	±5%				1
R	190	RCE0763	R, Carbon	1/4W	330Ω	±5%		1	1	
R	190	RCE0745	R, Carbon	1/4W	100Ω	±5%				1
R	191	RCE0776	R, Carbon	1/4W	3.9kΩ	±5%		1	1	
R	191	RCE0775	R, Carbon	1/4W	3.3kΩ	±5%				1
R	192	RCE0773	R, Carbon	1/4W	2.2kΩ	±5%		1	1	
R	192	RCE0770	R, Carbon	1/4W	1.2kΩ	±5%				1
RV	185	RNE0051	VR, Metal	EVN39C00YB14 (10K)				1	1	1
C	186	CCC1365	C, Ceramic	50V	680 pF	±10%		1	1	
C	186	CCC1034	C, Ceramic	50V	68 pF	±5%				1
C	190	CCC1365	C, Ceramic	50V	680 pF	±10%		1	1	1
TR	185	HTC0168	Transistor	2SC535C				1	1	1
TR	186	HTC0168	Transistor	2SC535C				1	1	1

TRIG PREAMP

Symbol		Part Code	Description				Q'ty A	B	C	D
R	241	RCE0777	R, Carbon	1/4W	4.7kΩ	±5%		1	1	1
R	242	RCE0777	R, Carbon	1/4W	4.7kΩ	±5%		1	1	1
R	243	RCE0765	R, Carbon	1/4W	470kΩ	±5%		1	1	1
R	244	RCE0765	R, Carbon	1/4W	2.2kΩ	±5%		1	1	1
R	245	RCE0766	R, Carbon	1/4W	560Ω	±5%				1
R	245	RCE0770	R, Carbon	1/4W	1.2kΩ	±5%	1	1	1	
R	246	RCE0768	R, Carbon	1/4W	560Ω	±5%				1
R	246	RCE0770	R, Carbon	1/4W	1.2kΩ	±5%	1	1	1	
R	247	RCE0768	R, Carbon	1/4W	820Ω	±5%	1	1	1	
R	247	RCE0765	R, Carbon	1/4W	470Ω	±5%				1
R	248	RCE0753	R, Carbon	1/4W	47Ω	±5%	1	1	1	1
R	249	RCE0757	R, Carbon	1/4W	100Ω	±5%				1
C	241	CCC1030	C, Ceramic	50V	10000 pF	±10%		1	1	1
C	242	CES0028	C, Alelyc	10V	47μF	±20%		1	1	1
C	243	CCC1007	C, Ceramic	50V	22 pF	±5%		1	1	1
C	244	CCC1007	C, Ceramic	50V	22 pF	±5%		1	1	1
C	245	CES0028	C, Alelyc	10V	47μF	±20%	1	1	1	1
C	248	CCC1025	C, Ceramic	50V	100 pF	±5%				1
C	248	CCC1032	C, Ceramic	50V	82 pF	±5%	1	1	1	
C	249	CCC0999	C, Ceramic	50V	5 pF	±0.25pF				1
C	270	CES0028	C, Alelyc	10V	47μF	±20%	1	1	1	1

Symbol	Part Code	Description	Q'ty A	B	C	D
C 271	CES0028	C, Alelyc 10V 47μF ±20%	1	1	1	1
TR 241	HTC0192	Transistor 2SC641K		1	1	1
TR 242	HTC0192	Transistor 2SC641K		1	1	1
TR 246	HTA0224	Transistor 2SA1029D	1	1	1	
TR 246	HTA0099	Transistor 2SA781K				1

SQUARE WAVE CAL 1kHz

Symbol	Part Code	Description	Q'ty A	B	C	D
R 1201	RME1174	R, Metal 1/4W 2.00kΩ ±1%	1	1	1	1
R 1202	RME1065	R, Metal 1/4W 267Ω ±1%	1	1	1	1
R 1203	RCE0783	R, Carbon 1/4W 15kΩ ±5%	1	1	1	1
R 1204	RCE0781	R, Carbon 1/4W 10kΩ ±5%	1	1	1	1
R 1205	RCE0783	R, Carbon 1/4W 15kΩ ±5%	1	1	1	1
R 1206	RCE0789	R, Carbon 1/4W 47kΩ ±5%	1	1	1	1
R 1207	RCE0781	R, Carbon 1/4W 10kΩ ±5%	1	1	1	1
R 1208	RCE0787	R, Carbon 1/4W 33kΩ ±5%	1	1	1	1
R 1209	RCE0781	R, Carbon 1/4W 10kΩ ±5%	1	1	1	1
R 1210	RCE0745	R, Carbon 1/4W 10Ω ±5%	1	1	1	1
C 1201	CCC1002	C, Ceramic 50V 10pF ±0.5pF	1	1	1	1
C 1202	CQA0091	C, Plastic 50V 0.001μF ±10%	1	1	1	1
C 1208	CQA0099	C, Plastic 50V 0.022μF ±10%	1	1	1	1
C 1210	CES0028	C, Alelyc 10V 47μF ±20%	1	1	1	1
RV 1201	RNE0058	VR, Metal EVN39C00YB13 (1K)	1	1	1	1
TR 1201	HTA0224	Transistor 2SA1029D	1	1	1	1
TR 1208	HTC0148	Transistor 2SC458C	1	1	1	1
TR 1209	HTC0148	Transistor 2SC458C	1	1	1	1

PANEL and OTHERS

Symbol	Part Code	Description	Q'ty A	B	C	D
J 80	JHB0088	CON, Coax BNC071	1	1	1	1
J 1201	JHB0088	CON, Coax BNC071	1	1	1	1

DELAY LINE

Symbol	Part Code	Description	Q'ty A	B	C	D
DL 201	8311741	Delay Line CD-3A				1
PEF-624		PCB PB-14				R

③ V OUT AMP

Symbol	Part Code	Description				Q'ty A	B	C	D
R 331	RME1062	R, Metal	1/4W	150Ω	±1%	1	1	1	
R 331	RME1060	R, Metal	1/4W	100Ω	±1%				1
R 332	RME1062	R, Metal	1/4W	150Ω	±1%	1	1	1	
R 332	RME1060	R, Metal	1/4W	100Ω	±1%				1
R 333	RCE0777	R, Carbon	1/4W	4.7kΩ	±5%				1
R 336	RCE0754	R, Carbon	1/4W	56Ω	±5%	1	1	1	
R 336	RCE0758	R, Carbon	1/4W	120Ω	±5%				1
R 337	RCE0745	R, Carbon	1/4W	10Ω	±5%				1
R 337	RCE0753	R, Carbon	1/4W	47Ω	±5%	1	1	1	
R 338	RCE0775	R, Carbon	1/4W	3.3kΩ	±5%				1
R 338	RCE0759	R, Carbon	1/4W	150Ω	±5%	1	1	1	
R 339	RCE0765	R, Carbon	1/4W	470Ω	±5%				1
R 339	RCE0766	R, Carbon	1/4W	560Ω	±5%		1	1	
R 339	RCE0768	R, Carbon	1/4W	820Ω	±5%	1			
R 340	RCE0768	R, Carbon	1/4W	820Ω	±5%	1			
R 340	RCE0766	R, Carbon	1/4W	560Ω	±5%		1	1	
R 340	RCE0765	R, Carbon	1/4W	470Ω	±5%				1
R 341	RCE0745	R, Carbon	1/4W	10Ω	±5%				1
R 342	RCE0797	R, Carbon	1/4W	220kΩ	±5%	1	1	1	
R 343	RCE0797	R, Carbon	1/4W	220kΩ	±5%	1	1	1	
R 344	RCE0757	R, Carbon	1/4W	100Ω	±5%	1			
R 344	RCE0755	R, Carbon	1/4W	68Ω	±5%		1	1	
R 345	RCE0753	R, Carbon	1/4W	47Ω	±5%				1
R 346	RCE0753	R, Carbon	1/4W	47Ω	±5%				1
R 347	RCE0759	R, Carbon	1/4W	150Ω	±5%				1
R 348	RCE0759	R, Carbon	1/4W	150Ω	±5%				1
R 349	RCE0759	R, Carbon	1/4W	150Ω	±5%				1
R 350	RCE0759	R, Carbon	1/4W	150Ω	±5%				1
R 355	RCE0756	R, Carbon	1/4W	82Ω	±5%				1
R 356	RCE0757	R, Carbon	1/4W	100Ω	±5%				1
R 357	RCE0745	R, Carbon	1/4W	10Ω	±5%				1
R 360	RCE0766	R, Carbon	1/4W	560Ω	±5%				1
R 361	RCE0766	R, Carbon	1/4W	560Ω	±5%				1
R 362	RCE0781	R, Carbon	1/4W	10kΩ	±5%				1
R 363	RME1065	R, Metal	1/4W	267Ω	±1%	1	1	1	
R 363	RME1066	R, Metal	1/4W	332Ω	±1%				1
R 364	RME1065	R, Metal	1/4W	267Ω	±1%	1	1	1	
R 364	RME1066	R, Metal	1/4W	332Ω	±1%				1
R 365	RCE0765	R, Carbon	1/4W	470Ω	±5%	1	1	1	
R 365	RCE0769	R, Carbon	1/4W	1kΩ	±5%				1
R 366	RCE0765	R, Carbon	1/4W	470Ω	±5%	1	1	1	
R 366	RCE0769	R, Carbon	1/4W	1kΩ	±5%				1
R 367	RMR3724	R, Metal	1W	10kΩ	±5%	1	1	1	
R 367	RMR3778	R, Metal	1W	6.8kΩ	±5%				1
R 368	RMR3724	R, Metal	1W	10kΩ	±5%	1	1	1	
R 368	RMR3778	R, Metal	1W	6.8kΩ	±5%				1
R 369	RCE0749	R, Carbon	1/4W	22Ω	±5%	1	1	1	1
R 371	RCE0751	R, Carbon	1/4W	33Ω	±5%	1	1	1	1
R 372	RCE0751	R, Carbon	1/4W	33Ω	±5%	1	1	1	1
R 373	RCE0749	R, Carbon	1/4W	22Ω	±5%	1	1	1	1
R 374	RCE0749	R, Carbon	1/4W	22Ω	±5%	1	1	1	1
R 375	RCE0751	R, Carbon	1/4W	33Ω	±5%	1	1	1	1
R 376	RCE0751	R, Carbon	1/4W	33Ω	±5%	1	1	1	1
R 377	RCE0769	R, Carbon	1/4W	1kΩ	±5%	1	1	1	1
R 378	RCE0769	R, Carbon	1/4W	1kΩ	±5%	1	1	1	1
R 381	RCE0715	R, Carbon	1/4W	6.8kΩ	±5%	1	1	1	
R 381	RCE0711	R, Carbon	1/4W	3.3kΩ	±5%				1
R 382	RCE0715	R, Carbon	1/4W	6.8kΩ	±5%	1	1	1	
R 382	RCE0711	R, Carbon	1/4W	3.3kΩ	±5%				1
R 383	RCE0749	R, Carbon	1/4W	22Ω	±5%	1	1	1	1
R 384	RCE0749	R, Carbon	1/4W	22Ω	±5%	1	1	1	1
R 385	RCE0761	R, Carbon	1/4W	220Ω	±5%	1	1	1	
R 385	RCE0763	R, Carbon	1/4W	330Ω	±5%				1

Symbol	Part Code	Description				Q'ty A	B	C	D
R 386	RCE0761	R, Carbon	1/4W	220Ω	±5%	1	1	1	
R 386	RCE0763	R, Carbon	1/4W	330Ω	±5%				1
R 387	RCE0715	R, Carbon	1/4W	6.8kΩ	±5%	1	1	1	
R 387	RCE0711	R, Carbon	1/4W	3.3kΩ	±5%				1
R 388	RCE0715	R, Carbon	1/4W	6.8kΩ	±5%	1	1	1	
R 388	RCE0711	R, Carbon	1/4W	3.3kΩ	±5%				1
R 389	RCE0723	R, Carbon	1/4W	33kΩ	±5%	1	1	1	
R 389	RCE0721	R, Carbon	1/4W	22kΩ	±5%				1
R 398	RCE0414	R, Carbon	1/4W	120Ω	±5%	1	1	1	1
R 399	RCE0414	R, Carbon	1/4W	120Ω	±5%	1	1	1	1
C 355	CCC1002	C, Ceramic	50V	10pF	±0.5pF				1
C 357	CCC0999	C, Ceramic	50V	5pF	±0.25pF				1
C 365	CCC1034	C, Ceramic	50V	68pF	±5%	1	1	1	
C 365	CCC1004	C, Ceramic	50V	15pF	±5%				1
C 366	CCC1014	C, Ceramic	50V	47pF	±5%	1	1	1	
C 366	CCC1002	C, Ceramic	50V	10pF	±0.5pF				1
C 367	CCD0273	C, Ceramic	500V	2pF	±0.25pF	1	1	1	1
C 368	CCD0273	C, Ceramic	500V	2pF	±0.25pF	1	1	1	1
C 379	CCD0217	C, Ceramic	500V	1000pF	+100 -0%	1	1	1	1
C 380	CCD0217	C, Ceramic	500V	1000pF	+100 -0%	1	1	1	1
C 385	CCC0591	C, Ceramic	500V	10000pF	+100 - 0%	1	1	1	1
C 386	CCC0591	C, Ceramic	500V	10000pF	+100 - 0%	1	1	1	1
C 389	CCD0287	C, Ceramic	500V	4700pF	+100 - 0%	1	1	1	1
C 363	CCC1030	C, Ceramic	50V	10000pF	+80 -20%	1	1	1	1
C 301	CET0033	C, Alelyc	160V	1μF	±20%	1	1	1	1
C 302	CES0028	C, Alelyc	10V	47μF	±20%	1	1	1	1
C 303	CES0028	C, Alelyc	10V	47μF	±20%	1	1	1	1
C 304	CES0028	C, Alelyc	10V	47μF	±20%	1	1	1	1
C 305	CES0028	C, Alelyc	10V	47μF	±20%	1	1	1	1
C 337	CCC1032	C, Ceramic	50V	82pF	±10%	1	1	1	
C 338	CCC1011	C, Ceramic	50V	33pF	±10%	1	1	1	1
C 345	CCC1029	C, Ceramic	50V	1000pF	+80 -20%				1
C 346	CCC1029	C, Ceramic	50V	1000pF	+80 -20%				1
C 364	CES0028	C, Alelyc	10V	47μF	±20%	1	1	1	1
TR 331	HTA0099	Transistor	2SA781K						1
TR 331	HTC0192	Transistor	2SC641K			1	1	1	
TR 332	HTA0099	Transistor	2SA781K						1
TR 332	HTC0192	Transistor	2SC641K			1	1	1	
TR 349	HTC0721	Transistor	2SC2901						1
TR 350	HTC0721	Transistor	2SC2901						1
TR 365	HTC0721	Transistor	2SC2901			1	1	1	1
TR 366	HTC0721	Transistor	2SC2901			1	1	1	1
TR 376	HTA0258	Transistor	2SA1210S			1	1	1	1
TR 377	HTA0099	Transistor	2SA781K			1	1	1	1
TR 378	HTA0099	Transistor	2SA781K			1	1	1	1
TR 371	HTC0669	Transistor	2SC2912S			1	1	1	1
TR 372	HTC0669	Transistor	2SC2912S			1	1	1	1
TR 375	HTA0259	Transistor	2SA1210S			1	1	1	1
L 385	TLE0091	Coil	ELE-V 2R2 MA			1	1	1	
L 385	TLE0109	Coil	ELE-V R68 MA						1
L 386	TLE0091	Coil	ELE-V 2R2 MA			1	1	1	
L 386	TLE0109	Coil	ELE-V R68 MA						1
RV 339	RNE0050	VR, Metal	EVN39C00YB52 (500)				1	1	
RV 339	RNE0048	VR, Metal	EVN39C00YB22 (200)						1

Symbol	Part Code	Description		Q'ty			
				A	B	C	D
CV 337	CVE0049	C, Variable	ECR-HA040E11	1	1	1	1
CV 355	CVE0049	C, Variable	ECR-HA040E11				1
CV 366	CVE0049	C, Variable	ECR-HA040E11	1	1	1	
CV 366	CVE0047	C, Variable	ECR-HA020D11				1
D 374	HDH0029	Diode	HZ5B	1	1	1	1
D 375	HDH0029	Diode	HZ5B	1	1	1	1
D 377	HDH0029	Diode	HZ5B	1	1	1	1
PEF-620		PCB	PB-14	R	R	R	R

④ TRIG GENERATOR

Symbol	Part Code	Description				Q'ty A	B	C	D
R 401	RCE0800	R, Carbon	1/4W	470kΩ	±5%	1	1	1	1
R 402	RCE0755	R, Carbon	1/4W	68Ω	±5%	1	1	1	1
R 404	RCE0764	R, Carbon	1/4W	390Ω	±5%	1	1	1	1
R 406	RCE0800	R, Carbon	1/4W	470kΩ	±5%	1	1	1	1
R 407	RCE0761	R, Carbon	1/4W	220Ω	±5%	1	1	1	1
R 408	RCE0757	R, Carbon	1/4W	100Ω	±5%	1	1	1	1
R 409	RCE0777	R, Carbon	1/4W	4.7kΩ	±5%	1	1	1	
R 409	RCE0779	R, Carbon	1/4W	6.8kΩ	±5%				1
R 410	RCE0772	R, Carbon	1/4W	1.8kΩ	±5%				1
R 417	RCE0769	R, Carbon	1/4W	1kΩ	±5%	1	1	1	1
R 418	RCE0779	R, Carbon	1/4W	6.8kΩ	±5%	1	1	1	1
R 420	RCE0781	R, Carbon	1/4W	10kΩ	±5%	1	1	1	1
R 425	RCE0745	R, Carbon	1/4W	10Ω	±5%	1	1	1	1
R 430	RCE0757	R, Carbon	1/4W	100Ω	±5%	1	1	1	1
R 432	RCE0767	R, Carbon	1/4W	680Ω	±5%	1	1	1	1
R 433	RCE0768	R, Carbon	1/4W	820Ω	±5%				1
R 433	RCE0769	R, Carbon	1/4W	1kΩ	±5%	1	1	1	
R 434	RCE0689	R, Carbon	1/2W	47Ω	±5%	1	1	1	1
R 435	RCE0774	R, Carbon	1/4W	2.7kΩ	±5%	1	1	1	1
R 436	RCE0775	R, Carbon	1/4W	3.3kΩ	±5%	1	1	1	1
R 437	RCE0775	R, Carbon	1/4W	3.3kΩ	±5%	1	1	1	1
R 438	RCE0789	R, Carbon	1/4W	47kΩ	±5%	1	1	1	1
R 439	RCE0789	R, Carbon	1/4W	47kΩ	±5%	1	1	1	1
R 441	RCE0769	R, Carbon	1/4W	1kΩ	±5%	1	1	1	1
R 443	RCE0769	R, Carbon	1/4W	47kΩ	±5%	1	1	1	1
R 444	RCE0771	R, Carbon	1/4W	1.5kΩ	±5%	1	1	1	1
R 445	RCE0777	R, Carbon	1/4W	4.7kΩ	±5%	1	1	1	1
R 450	RCE0777	R, Carbon	1/4W	4.7kΩ	±5%	1	1	1	1
R 452	RCE0785	R, Carbon	1/4W	22kΩ	±5%	1	1	1	1
R 460	RCE0745	R, Carbon	1/4W	10Ω	±5%	1	1	1	
R 460	RCE0749	R, Carbon	1/4W	22Ω	±5%				1
R 470	RCE0800	R, Carbon	1/4W	470kΩ	±5%	1			
R 471	RCE0777	R, Carbon	1/4W	4.7kΩ	±5%	1			
R 472	RCE0777	R, Carbon	1/4W	1.5kΩ	±5%	1			
R 473	RCE0781	R, Carbon	1/4W	10kΩ	±5%	1			
C 402	CCD0279	C, Ceramic	500V	22pF	±5%	1	1	1	1
C 403	CQX0068	C, Plastic	400V	0.047μF	±10%	1	1	1	1
C 404	CCC1029	C, Ceramic	50V	1000pF	+80 -20%	1	1	1	1
C 405	CQA0101	C, Plastic	50V	47000pF	±10%	1	1	1	1
C 407	CCC0999	C, Ceramic	50V	5pF	±0.25pF	1	1	1	1
C 408	CES0028	C, AL Elyc	10V	47μF	±20%	1	1	1	1
C 417	CEC0176	C, AL Elyc	25V	10μF	±20%	1	1	1	1
C 418	CCC1030	C, Ceramic	50V	1000pF	+80 -20%	1	1	1	1
C 425	CES0028	C, AL Elyc	10V	47μF	±20%	1	1	1	1
C 442	CEX0230	C, AL Elyc	50V	1BP	+80 -20%	1	1	1	1
C 444	CES0028	C, AL Elyc	10V	47μF	±20%	1	1	1	1
C 452	CQA0097	C, Plastic	50V	10000pF	±10%	1	1	1	1
C 460	CES0028	C, AL Elyc	10V	47μF	±20%	1	1	1	1
C 470	CCC1030	C, Ceramic	50V	10000pF	+80 -20%	1			
RV 418	RDE0003	VR, Carbon	EVH-YK3325B14			1	1	1	1
RV 420	RNE0051	VR, Metal	EVN39C00YB14 (10K)			1	1	1	1
RV 473	RNE0047	VR, Metal	EVN39C00&B54 (50K)			1			
TR 401	HTK0099	Transistor	2SK404E			1	1	1	1
TR 402	HTC0148	Transistor	2SC458C						1
TR 431	HTC0168	Transistor	2SC535C			1	1	1	1

Symbol	Part Code	Description		Q'ty A	B	C	D
TR4 432	HTC0168	Transistor	2SC535C	1	1	1	1
TR 441	HTA0224	Transistor	2SA1029D	1	1	1	1
TR 470	HTK0099	Transistor	2SK404E	1			
L 432	TLE0111	Coil	ELE-V 6R8KA				1
IC 401	IDH0402	Digital IC	HD74S00				1
IC 401	IDH0467	Digital IC	HD74LS00P	1	1	1	
S 401		SW Lever	SLR024	1	1	1	1
S 403		SW Lever	SLR024	1	1	1	1
D 401	HDS0437	Diode	1SS133	1	1	1	1
D 444	HDS0437	Diode	1SS133	1	1	1	1

PANEL and OTHERS

Symbol	Part Code	Description		Q'ty A	B	C	D
J 403	JHB0088	CON. Coax	BNC071	1	1	1	1

⑤ SWEEP GEN

Symbol	Part Code	Description				Q'ty A	B	C	D
R 501	RCE0745	R, Carbon	1/4W	10Ω	±5%	1	1	1	1
R 502	RCE0769	R, Carbon	1/4W	1kΩ	±5%	1	1	1	1
R 503	RCE0777	R, Carbon	1/4W	4.7kΩ	±5%	1	1	1	1
R 504	RCE0789	R, Carbon	1/4W	47kΩ	±5%	1	1	1	1
R 505	RCE0775	R, Carbon	1/4W	3.3kΩ	±5%	1	1	1	1
R 506	RCE0789	R, Carbon	1/4W	47kΩ	±5%	1	1	1	1
R 507	RCE0781	R, Carbon	1/4W	10kΩ	±5%	1	1	1	1
R 508	RCE0745	R, Carbon	1/4W	10Ω	±5%	1	1	1	
R 509	RCE0773	R, Carbon	1/4W	2.2kΩ	±5%	1	1	1	1
R 510	RCE0753	R, Carbon	1/4W	47Ω	±5%	1	1	1	1
R 513	RCE0780	R, Carbon	1/4W	8.2kΩ	±5%	1	1	1	1
R 514	RCE0771	R, Carbon	1/4W	1.5kΩ	±5%	1	1	1	1
R 515	RCE0783	R, Carbon	1/4W	15kΩ	±5%	1	1	1	1
R 519	RCE0773	R, Carbon	1/4W	2.2kΩ	±5%	1	1	1	1
R 520	RCE0773	R, Carbon	1/4W	2.2kΩ	±5%	1	1	1	1
R 521	RCE0789	R, Carbon	1/4W	47kΩ	±5%	1	1	1	1
R 522	RCE0762	R, Carbon	1/4W	270Ω	±5%	1	1	1	1
R 523	RCE0777	R, Carbon	1/4W	4.7kΩ	±5%	1	1	1	1
R 524	RCE0793	R, Carbon	1/4W	100kΩ	±5%	1	1	1	
R 524	RCE0789	R, Carbon	1/4W	47kΩ	±5%				1
R 525	RCE0753	R, Carbon	1/4W	47Ω	±5%	1	1	1	1
R 526	RCE0779	R, Carbon	1/4W	6.8kΩ	±5%	1	1	1	1
R 529	RCE0757	R, Carbon	1/4W	100Ω	±5%	1	1	1	1
R 530	RCE0765	R, Carbon	1/4W	470Ω	±5%	1	1	1	1
R 531	RME1174	R, Metal	1/4W	2.00kΩ	±1%	1	1	1	1
R 532	RCE0775	R, Carbon	1/4W	3.3kΩ	±5%	1	1	1	1
R 533	RCE0776	R, Carbon	1/4W	3.9kΩ	±5%	1	1	1	
R 533	RCE0775	R, Carbon	1/4W	3.3kΩ	±5%				1
R 534	RCE0785	R, Carbon	1/4W	22kΩ	±5%	1	1	1	1
R 535	RCE0773	R, Carbon	1/4W	2.2kΩ	±5%	1	1	1	1
R 536	RCE0774	R, Carbon	1/4W	2.7kΩ	±5%	1	1	1	
R 536	RCE0773	R, Carbon	1/4W	2.2kΩ	±5%				1
R 537	RCE0773	R, Carbon	1/4W	2.2kΩ	±5%			1	1
R 538	RCE0783	R, Carbon	1/4W	15kΩ	±5%			1	1
RM 520	3173847	R, Block	FOR TIMING			1	1	1	1
C 501	CCC1030	C, Ceramic	50V	10000pF	+80 -20%	1	1	1	1
C 525	CCC1133	C, Ceramic	50V	1pF	±0.25pF	1	1	1	1
C 508	CCC1030	C, Ceramic	50V	10000pF	+80 -20%	1	1	1	1
C 510	CCC1030	C, Ceramic	50V	10000pF	+80 -20%	1	1	1	1
C 511	CES0036	C, AL Elyc	25V	22μF	±20%	1	1	1	1
C 519	CES0028	C, AL Elyc	10V	47μF	±20%	1	1	1	1
C 520	CCC1032	C, Ceramic	50V	82pF	±5%	1	1	1	1
C 524	CCC1001	C, Ceramic	50V	8pF	±0.5pF	1	1	1	1
C 525	CQE0049	C, Plastic	ECQ-E1105JN(JNB)Type			1	1	1	1
C 526	CQR0048	C, Plastic	ECQ-E1103JN (JNB)			1	1	1	1
C 527	CCC1030	C, Ceramic	50V	10000pF	+80 -20%	1	1	1	1
C 528	CES0028	C, AL Elyc	10V	47μF	±20%	1	1	1	1
C 530	CCC1025	C, Ceramic	50V	100pF	±10%	1	1	1	1
C 538	CCC1014	C, Ceramic	50V	47pF	±5%			1	
C 538	CCC1011	C, Ceramic	50V	33pF	±5%				1
CV 520	CVE0049	C, Variable	ECR-HA040E11			1	1	1	1
TR 503	HTA0224	Transistor	2SA1029D			1	1	1	1
TR 514	HTC0148	Transistor	2SC458C			1	1	1	1
TR 520	HTK0081	Transistor	2SK304E			1	1	1	1
TR 521	HTC0148	Transistor	2SC458C			1	1	1	1
TR 522	HTC0148	Transistor	2SC458C			1	1	1	1
TR 532	HTC0148	Transistor	2SC458C			1	1	1	1

Symbol	Part Code	Description				Q'ty A	B	C	D
IC 501	IDH0586	Digital, IC	HD74LS74AP			1	1	1	
IC 501	IDH0428	Digital, IC	HD74S74						1
IC 502	IDH0469	Digital, IC	HD74LS03P			1	1	1	1
D 501	HDS0437	Diode	1SS133			1	1	1	1
D 520	HDM0051	Diode	MA161			1	1	1	1
D 521	HDM0051	Diode	MA161			1	1	1	1
D 522	HDM0051	Diode	MA161			1	1	1	1
D 530	HDS0437	Diode	1SS133			1	1	1	1
D 535	HDM0051	Diode	MA161			1	1	1	1
D 536	HDS0437	Diode	1SS133			1	1	1	1
R 527	RSE0434	R, Solid	1/4W	10MΩ	±5%	1	1	1	1
R 528	RCE0936	R, Carbon	1/2W	1.5MΩ	±5%	1	1	1	1

HORIZONTAL DISPLAY CKT

Symbol	Part Code	Description				Q'ty A	B	C	D
R 540	RCE0766	R, Carbon	1/4W	560Ω	±5%	1	1	1	1
R 541	RCE0764	R, Carbon	1/4W	390Ω	±5%	1	1	1	1
R 542	RCE0770	R, Carbon	1/4W	1.2kΩ	±5%	1	1	1	1
R 543	RCE0769	R, Carbon	1/4W	1kΩ	±5%			1	1
R 544	RCE0783	R, Carbon	1/4W	15kΩ	±5%	1	1	1	1
R 545	RCE0780	R, Carbon	1/4W	8.2kΩ	±5%	1	1	1	1
R 546	RCE0773	R, Carbon	1/4W	2.2kΩ	±5%	1	1	1	1
R 547	RCE0775	R, Carbon	1/4W	3.3kΩ	±5%	1	1	1	1
R 548	RCE0778	R, Carbon	1/4W	5.6kΩ	±5%	1	1	1	1
R 549	RCE0781	R, Carbon	1/4W	10kΩ	±5%	1	1	1	1
R 550	RCE0778	R, Carbon	1/4W	5.6kΩ	±5%	1	1	1	1
R 551	RCE0777	R, Carbon	1/4W	4.7kΩ	±5%	1	1	1	1
R 552	RCE0775	R, Carbon	1/4W	3.3kΩ	±5%	1	1	1	1
R 553	RCE0781	R, Carbon	1/4W	10kΩ	±5%	1	1	1	1
R 554	RCE0765	R, Carbon	1/4W	470Ω	±5%	1	1	1	1
R 555	RCE0765	R, Carbon	1/4W	470Ω	±5%	1	1	1	1
R 556	RCE0767	R, Carbon	1/4W	680Ω	±5%	1	1	1	1
C 544	CQA0097	C, Plastic	50V	10000pF	±10%	1	1	1	1
C 545	CET0031	C, AL Elyc	50V	1μF		1	1	1	1
C 550	CCC1014	C, Ceramic	50V	47pF	±5%	1	1	1	1
C 551	CCC1030	C, Ceramic	50V	10000pF	+80 -20%	1	1	1	1
C 552	CCC1030	C, Ceramic	50V	10000pF	+80 -20%	1	1	1	1
C 553	CES0028	C, AL Elyc	10V	47μF	±10%	1	1	1	1
C 554	CES0028	C, AL Elyc	10V	47μF	±10%	1	1	1	1
RV 540	8397021	VR, Carbon	V16L5(7x6.5)20KC-B2k				1	1	1
RV 540	840074	VR, Carbon	V16L420KC-B2k+B100k			1			
RV 542	RNE0052	VR, Metal	39C00YB23 (2K)			1	1	1	1
RV 550	RNE0058	VR, Metal	39C00YB13 (1K)			1	1	1	1
TR 544	HTC0148	Transistor	2SC458C			1	1	1	1
TR 545	HTC0148	Transistor	2SC458C			1	1	1	1
IC 550	IDH0802	Digital IC	HD14053BP			1	1	1	1
D 541	HDS0437	Diode	1SS133			1	1	1	1
D 543	HDS0407	Diode	SR503D with mount(red)					1	1

CHOP PULSE GENERATOR

Symbol		Part Code	Description					Q'ty			
								A	B	C	D
R	571	RCE0769	R, Carbon	1/4W	1kΩ	±5%			1	1	1
R	572	RCE0776	R, Carbon	1/4W	3.9kΩ	±5%			1	1	1
R	573	RCE0765	R, Carbon	1/4W	470Ω	±5%			1	1	1
R	574	RCE0783	R, Carbon	1/4W	15kΩ	±5%			1	1	1
R	576	RCE0745	R, Carbon	1/4W	10Ω	±5%		1	1	1	1
R	578	RCE0776	R, Carbon	1/4W	3.9kΩ	±5%			1	1	1
C	571	CCC1030	C, Ceramic	50V	10000pF	+80 -20%			1	1	1
C	572	CCC1014	C, Ceramic	50V	47pF	±5%			1	1	1
C	573	CCC1027	C, Ceramic	50V	220pF	±10%			1	1	1
C	575	CCC1027	C, Ceramic	50V	220pF	±10%			1	1	1
C	576	CCC1030	C, Ceramic	50V	10000pF	+80 -20%		1	1	1	1
IC	571	IDH0646	Digital, IC	HD74LS02P				1	1	1	1
L	537	TLE0138	Coil	ELE-V 681KA						1	
L	537	TLE0092	Coil	ELE-V 331KA							1
L	571	TLE0128	Coil	ELE-V 330KA					1	1	1
D	571	HDS0437	Diode	1SS133					1	1	1
D	572	HDS0437	Diode	1SS133					1	1	1
D	573	HDS0437	Diode	1SS133					1	1	1
D	574	HDS0437	Diode	1SS133					1	1	1

⑥ H AMP

Symbol	Part Code	Description				Q'ty A	B	C	D
R 801	RCE0779	R, Carbon	1/4W	6.8kΩ	±5%	1	1	1	1
R 802	RCE0761	R, Carbon	1/4W	220Ω	±5%	1	1	1	1
R 804	RCE0781	R, Carbon	1/4W	10kΩ	±5%	1	1	1	1
R 805	RCE0765	R, Carbon	1/4W	470Ω	±5%	1	1	1	1
R 806	RCE0753	R, Carbon	1/4W	47Ω	±5%	1	1	1	1
R 807	RCE0761	R, Carbon	1/4W	220Ω	±5%	1	1	1	1
R 811	RME1076	R, Metal	1/4W	2.21kΩ	±1%	1	1	1	1
R 812	RME1076	R, Metal	1/4W	2.21kΩ	±1%	1	1	1	1
R 813	RCE0770	R, Carbon	1/4W	1.2kΩ	±5%	1	1	1	1
R 814	RCE0770	R, Carbon	1/4W	1.2kΩ	±5%	1	1	1	1
R 821	RME1095	R, Metal	1/4W	82.5kΩ	±1%	1	1		
R 821	RCE0773	R, Carbon	1/4W	2.2kΩ	±5%			1	
R 821	RCE0769	R, Carbon	1/4W	1kΩ	±5%				1
R 822	RME1095	R, Metal	1/4W	82.5kΩ	±1%	1	1		
R 822	RCE0773	R, Carbon	1/4W	2.2kΩ	±5%			1	
R 822	RCE0769	R, Carbon	1/4W	1kΩ	±5%				1
R 823	RCE0745	R, Carbon	1/4W	10Ω	±5%	1	1	1	1
R 824	RCE0775	R, Carbon	1/4W	3.3kΩ	±5%	1	1		
R 824	RCE0779	R, Carbon	1/4W	6.8kΩ	±5%			1	
R 824	RCE0774	R, Carbon	1/4W	2.7kΩ	±5%				1
R 831	RCE0762	R, Carbon	1/4W	270Ω	±5%			1	
R 831	RCE0757	R, Carbon	1/4W	100Ω	±5%				1
R 832	RCE0749	R, Carbon	1/4W	22Ω	±5%	1	1	1	1
R 833	RME1195	R, Metal	1/4W	110kΩ	±1%	1	1		
R 833	RME1076	R, Metal	1/4W	2.21kΩ	±1%			1	
R 833	RME1073	R, Metal	1/4W	1.21kΩ	±1%				1
R 834	RME1195	R, Metal	1/4W	110kΩ	±1%	1	1		
R 834	RME1076	R, Metal	1/4W	2.21kΩ	±1%			1	
R 834	RME1073	R, Metal	1/4W	1.21kΩ	±1%				1
R 840	RCE0765	R, Carbon	1/4W	470Ω	±5%	1	1	1	
R 840	RCE0761	R, Carbon	1/4W	100Ω	±5%				1
R 841	RME1079	R, Metal	1/4W	3.92kΩ	±1%	1	1	1	
R 841	RME1074	R, Metal	1/4W	1.50kΩ	±1%				1
R 842	RME1079	R, Metal	1/4W	3.92kΩ	±1%	1	1	1	
R 842	RME1074	R, Metal	1/4W	1.50kΩ	±1%				1
R 843	RCE0775	R, Carbon	1/4W	3.3kΩ	±5%	1	1	1	
R 843	RCE0773	R, Carbon	1/4W	2.2kΩ	±5%				1
R 844	RCE0775	R, Carbon	1/4W	3.3kΩ	±5%	1	1	1	
R 844	RCE0773	R, Carbon	1/4W	2.2kΩ	±5%				1
R 845	RMR3779	R, Metal	1/4W	100kΩ	±1%	1	1	1	
R 845	RMR3726	R, Carbon	1W	22kΩ	±1%				1
R 846	RMR3779	R, Metal	1/4W	100kΩ	±1%	1	1	1	
R 846	RMR3726	R, Carbon	1W	22kΩ	±1%				1
R 847	RCE0757	R, Carbon	1/4W	100Ω	±5%	1	1		
R 847	RCE0755	R, Carbon	1/4W	68Ω	±5%			1	1
R 851	RCE0721	R, Carbon	1/2W	22kΩ	±5%	1	1	1	
R 851	RCE0714	R, Carbon	1/2W	5.6kΩ	±5%				1
R 852	RCE0721	R, Carbon	1/2W	22kΩ	±5%	1	1	1	
R 852	RCE0714	R, Carbon	1/2W	5.6kΩ	±5%				1
R 853	RCE0721	R, Carbon	1/2W	22kΩ	±5%	1	1	1	
R 853	RCE0714	R, Carbon	1/2W	5.6kΩ	±5%				1
R 854	RCE0721	R, Carbon	1/2W	22kΩ	±5%	1	1	1	
R 854	RCE0714	R, Carbon	1/2W	5.6kΩ	±5%				1
R 855	RCE0721	R, Carbon	1/2W	22kΩ	±5%	1	1	1	
R 855	RCE0714	R, Carbon	1/2W	5.6kΩ	±5%				1
R 856	RCE0721	R, Carbon	1/2W	22kΩ	±5%	1	1	1	
R 856	RCE0714	R, Carbon	1/2W	5.6kΩ	±5%				1
R 857	RCE0763	R, Carbon	1/4W	330Ω	±1%	1	1	1	1
R 858	RCE0763	R, Carbon	1/4W	330Ω	±5%	1	1	1	1
R 859	RZZ0032	R, Fusing	PF-25S	470Ω		1	1	1	
R 859	RZZ0031	R, Fusing	PF-25S	220Ω					1
R 867	RCE0779	R, Carbon	1/4W	10kΩ	±5%	1	1		
R 868	RCE0778	R, Carbon	1/4W	8.2kΩ	±5%	1	1		

Symbol	Part Code	Description				Q'ty A	B	C	D
R 871	RCE0757	R, Carbon	1/4W	100Ω	±5%	1	1	1	1
R 872	RCE0757	R, Carbon	1/4W	100Ω	±5%	1	1	1	1
R 873	RCE0761	R, Carbon	1/4W	220Ω	±5%	1	1	1	1
R 874	RCE0761	R, Carbon	1/4W	220Ω	±5%	1	1	1	1
R 880	RCE0761	R, Carbon	1/4W	220Ω	±5%	1	1	1	1
R 881	RCE0761	R, Carbon	1/4W	220Ω	±5%	1	1	1	1
C 801	CES0028	C, AL Elyc	10V	47μF	±10%	1	1	1	1
C 805	CCC1030	C, Ceramic	50V	10000pF	+80 -20%	1	1	1	1
C 806	CES0028	C, AL Elyc	10V	47μF	±10%	1	1	1	1
C 808	CES0028	C, AL Elyc	10V	47μF	±10%	1	1	1	1
C 811	CCC1002	C, Ceramic	50V	10pF	±0.5pF	1	1	1	
C 811	CCC0996	C, Ceramic	50V	2pF	±0.25pF				1
C 812	CCC1002	C, Ceramic	50V	10pF	±0.5pF	1	1	1	
C 812	CCC0996	C, Ceramic	50V	2pF	±0.25pF				1
C 832	CCC1007	C, Ceramic	50V	22pF	±5%	1	1	1	1
C 840	CCC1002	C, Ceramic	50V	10pF	±0.5pF				1
C 845	CCD0273	C, Ceramic	500V	2pF	±0.25pF	1	1	1	1
C 846	CCD0273	C, Ceramic	500V	2pF	±0.25pF	1	1	1	1
C 847	CCC1007	C, Ceramic	50V	22pF	±5%	1	1	1	1
C 848	CCC1007	C, Ceramic	50V	22pF	±5%	1	1	1	1
C 857	CCD0287	C, Ceramic	500V	4700pF	+100 - 0%	1	1	1	1
C 861	CCC1030	C, Ceramic	50V	10000pF	+80 -20%			1	1
C 873	CCC1025	C, Ceramic	50V	100pF	±10%	1	1	1	1
C 874	CCC1025	C, Ceramic	50V	100pF	±10%	1	1	1	1
C 823	CCC1004	C, Ceramic	50V	15pF	±5%	1	1	1	1
C 880	CCC1030	C, Ceramic	50V	10000pF	+80 -20%	1	1	1	1
RV 805	RDE0003	VR, Carbon	EVH-YK3325B14			1	1	1	1
RV 821	RNE0047	VR, Metal	EVN39C00YB54 (50K)			1	1		
RV 821	RNE0052	VR, Metal	EVN39C00YB23 (2K)					1	
RV 821	RNE0050	VR, Metal	EVN39C00YB52 (500)						1
RV 824	RNE0052	VR, Metal	EVN39C00YB23 (2K)			1	1		
RV 824	RNE0051	VR, Metal	EVN39C00YB14 (10K)					1	1
RV 831	RNE0050	VR, Metal	EVN39C00YB52 (500)			1	1	1	
RV 831	RNE0048	VR, Metal	EVN39C00YB22 (200)						1
CV 840	CVE0049	C, Variable	ECR-HA040E11			1	1	1	1
TR 811	HTC0148	Transistor	2SC458C			1	1	1	1
TR 812	HTC0148	Transistor	2SC458C			1	1	1	1
TR 821	HTA0224	Transistor	2SA1029D			1	1	1	1
TR 822	HTA0224	Transistor	2SA1029D			1	1	1	1
TR 831	HTA0224	Transistor	2SA1029D			1	1	1	1
TR 832	HTA0224	Transistor	2SA1029D			1	1	1	1
TR 843	HTA0224	Transistor	2SA1029D			1	1	1	1
TR 844	HTA0224	Transistor	2SA1029D			1	1	1	1
TR 851	HTC0649	Transistor	2SC2610			1	1	1	
TR 851	HTC0722	Transistor	2SC2909S						1
TR 852	HTC0649	Transistor	2SC2610			1	1	1	
TR 852	HTC0722	Transistor	2SC2909S						1
TR 853	HTC0649	Transistor	2SC2610			1	1	1	
TR 853	HTC0722	Transistor	2SC2909S						1
TR 854	HTC0649	Transistor	2SC2610			1	1	1	
TR 854	HTC0722	Transistor	2SC2909S						1
L 852	TLE0138	Coil	ELE-V 681KA						1
L 852	TLE0148	Coil	FL-7H 682J			1	1	1	
S 501	8394003	SW, Rotary				1	1	1	1
VS 502	8376780	SW PB	SPJ222N					1	1

Symbol		Part Code	Description		Q'ty			
					A	B	C	D
D	851	HDS0437	Diode	1SS133	1	1	1	1
D	852	HDS0437	Diode	1SS133	1	1	1	1
D	853	HDS0437	Diode	1SS133	1	1	1	1
D	854	HDS0437	Diode	1SS133	1	1	1	1

ALT MAG SWITCHING

Symbol		Part Code	Description				Q'ty			
							A	B	C	D
R	860	RCE0770	R, Carbon	1/4W	1.2kΩ	±5%				1
R	860	RME1192	R, Metal	1/4W	24.3kΩ	±1%			1	
R	861	RCE0777	R, Carbon	1/4W	4.7kΩ	±5%			1	1
R	862	RCE0777	R, Carbon	1/4W	4.7kΩ	±5%			1	1
R	863	RCE0777	R, Carbon	1/4W	4.7kΩ	±5%			1	1
R	864	RCE0765	R, Carbon	1/4W	470Ω	±5%			1	1
R	865	RCE0765	R, Carbon	1/4W	470Ω	±5%			1	1
R	866	RME1085	R, Metal	1/4W	12.1kΩ	±1%				1
R	861	RME1090	R, Metal	1/4W	33.2kΩ	±1%			1	
R	869	RCE0745	R, Carbon	1/4W	10Ω	±5%			1	1
TR	860	HTA0224	Transistor	2SA1029D					1	1
TR	861	HTA0224	Transistor	2SA1029D					1	1
IC	801	IDH0586	Digital IC	HD74LS74AP					1	1

⑦ HV Z AMP

HIGH VOLTAGE CKT

Symbol	Part Code	Description					Q'ty A	B	C	D
R 1001	RMS0023	R, Metal	1/4W	1.43MΩ	±0.5%		1	1	1	
R 1001	RMS0018	R, Metal	1/4W	1MΩ	±1%					1
R 1002	RCE0789	R, Carbon	1/4W	47kΩ	±5%		1	1	1	1
R 1003	RCE0797	R, Carbon	1/4W	220kΩ	±5%		1	1	1	1
R 1004	RCE0769	R, Carbon	1/4W	1kΩ	±5%		1	1	1	1
R 1005	RCE0777	R, Carbon	1/4W	4.7kΩ	±5%		1	1	1	
R 1005	RCE0775	R, Carbon	1/4W	3.3kΩ	±5%					1
R 1006	RCE0757	R, Carbon	1/4W	100Ω	±5%		1	1	1	1
R 1012	RCE0789	R, Carbon	1/4W	47kΩ	±5%					1
R 1014	RCE0715	R, Carbon	1/2W	6.8kΩ	±5%		1	1	1	1
R 1017	RMV0004	R, Metal	1/2W	22.1MΩ	±1%		1	1	1	1
R 1016	RCE0800	R, Carbon	1/4W	470kΩ	±5%		1	1	1	
R 1016	RCE0745	R, Carbon	1/4W	10Ω	±5%					1
R 1020	RCE0798	R, Carbon	1/4W	330kΩ	±5%		1	1	1	1
R 1021	RCE0785	R, Carbon	1/4W	22kΩ	±5%		1	1	1	
R 1021	RCE0773	R, Carbon	1/4W	2.2kΩ	±5%					1
R 1023	RCE0777	R, Carbon	1/4W	4.7kΩ	±5%		1	1	1	1
R 1024	RSE0434	R, Solid	ERC14G	10MΩ			1	1	1	1
R 1033	RCE0781	R, Carbon	1/4W	10kΩ	±5%					1
R 1034	RCE0785	R, Carbon	1/4W	22kΩ	±5%					1
R 1038	RCE0793	R, Carbon	1/4W	100kΩ	±5%					1
R 1038	RCE0798	R, Carbon	1/4W	330kΩ	±5%		1	1	1	1
R 1350	RCE0749	R, Carbon	1/4W	22Ω	±5%		1	1	1	1
C 1001	CQA0099	C, Plastic	50V	0.022μF	±10%		1	1	1	1
C 1002	CES0035	C, AL Elyc	50V	47μF	±10%		1	1	1	1
C 1005	CQA0101	C, Plastic	50V	0.047μF	±10%		1	1	1	1
C 1012	CCD0231	C, Ceramic	2000V	4700pF	+80 -20%		1	1	1	1
C 1013	CCD0231	C, Ceramic	2000V	4700pF	+80 -20%		1	1	1	1
C 1014	CCD0231	C, Ceramic	2000V	4700pF	+80 -20%		1	1	1	1
C 1016	CCD0245	C, Ceramic	2000V	100pF	±10%		1	1	1	1
C 1020	CCD0286	C, Ceramic	500V	1000pF	+100 -0%		1	1	1	1
C 1021	CEC0213	C, AL Elyc	160V	1μF	1		1	1	1	1
C 1023	CCD0246	C, Ceramic	2kV	1000pF	±10%		1	1	1	1
C 1025	CCD0231	C, Ceramic	2000V	4700pF	+80 -20%		1	1	1	1
C 1034	CCD0287	C, Ceramic	500V	4700pF	+100 -0%					1
C 1035	CCD0287	C, Ceramic	500V	4700pF	+100 -0%		1	1	1	1
C 1038	CCD0287	C, Ceramic	500V	4700pF	+100 -0%		1	1	1	1
RV 1021	RNE0054	VR, Metal	EVN39C00YB15 (100K)				1	1	1	1
RV 1033	RNE0054	VR, Metal	EVN39C00YB15 (100K)							1
RV 1035	RNE0055	VR, Metal	EVN39C00YB25 (200K)				1	1	1	
RV 1035	RNE0054	VR, Metal	EVN39C00YB15 (100K)							1
RV 1348	8348450	VR, Metal	CR29R	22kΩ			1	1	1	1
TR 1001	HTK0081	Transistor	2SK304E				1	1	1	1
TR 1002	HTA0224	Transistor	2SA1029D				1	1	1	1
TR 1006	HTD0155	Transistor	2SD313E				1	1	1	1
	HYX0010		30F-TO-220				1	1	1	1
TR 1348	HTC0148	Transistor	2SC458C				1	1	1	1
TR 1349	HTA0224	Transistor	2SA1029D				1	1	1	1
D 1012	HDY0031	Diode	Y10GA				1	1	1	
D 1013	HDY0031	Diode	Y10GA							1
D 1020	HDH0072	Diode	HZ22							1
D 1021	HDS0250	Diode	1SS83				1	1	1	1
D 1022	HDS0250	Diode	1SS83				1	1	1	1
D 1023	HDS0250	Diode	1SS83				1	1	1	1
D 1024	HDS0250	Diode	1SS83				1	1	1	1
D 1038	HDH0072	Diode	HZ22				1	1	1	1

Symbol	Part Code	Description		Q'ty A	B	C	D
T 1001	3180008	XFMR	FOR V-211,212,222, 422	1	1	1	1
F 1001		Fuse	TSCR UL 125V 0.25A	1	1	1	
MUT1001	3180009	Multiplier	10KV X5				1
NL 1024	ELL0019	Lamps	NE-2	1	1	1	1
NL 1025	ELL0019	Lamps	NE-2	1	1	1	1
F 1001	EFL0147	Fuse	TSCR UL 125V 0.5A				1

PANEL and OTHERS

Symbol	Part Code	Description		Q'ty A	B	C	D
V 1001	DPX0076	CRT	150BTB31 (IG)	1	1	1	
V 1001	DPX0077	CRT	2977B31				1
	8338351	Terminal	Z-048	1	1	1	1
J 9	JHB0088	CON. Coax	BNC071	1	1	1	1
L 1350		Coil	Trace Rotation	1	1	1	1

Z AXIS AMP

Symbol	Part Code	Description				Q'ty A	B	C	D
R 901	RCE0789	R, Carbon	1/4W	47kΩ	±5%	1	1	1	
R 901	RCE0787	R, Carbon	1/4W	33kΩ	±5%				1
R 902	RCE0776	R, Carbon	1/4W	3.9kΩ	±5%	1	1	1	1
R 903	RCE0784	R, Carbon	1/4W	18kΩ	±5%				1
R 903	RCE0779	R, Carbon	1/4W	6.8kΩ	±5%	1	1	1	
R 904	RCE0725	R, Carbon	1/2W	47kΩ	±5%	1	1	1	
R 904	RCE0723	R, Carbon	1/2W	33kΩ	±5%				1
R 906	RCE0793	R, Carbon	1/4W	100kΩ	±5%				1
R 906	RCE0793	R, Carbon	1/4W	100kΩ	±5%	1	1	1	
R 907	RCE0757	R, Carbon	1/4W	100Ω	±5%	1	1	1	1
R 908	RCE0771	R, Carbon	1/4W	1.5kΩ	±5%				1
R 908	RCE0773	R, Carbon	1/4W	2.2kΩ	±5%	1	1	1	
R 909	RCE0798	R, Carbon	1/4W	330kΩ	±5%	1	1	1	
R 909	RCE0797	R, Carbon	1/4W	220kΩ	±5%				1
R 910	RCE0783	R, Carbon	1/4W	15kΩ	±5%				1
R 910	RCE0793	R, Carbon	1/4W	100kΩ	±5%	1	1	1	
R 911	RCE0781	R, Carbon	1/4W	10kΩ	±5%	1	1	1	
R 911	RCE0769	R, Carbon	1/4W	1kΩ	±5%				1
R 912	RCE0745	R, Carbon	1/4W	10Ω	±5%	1	1	1	
R 912	RCE0745	R, Carbon	1/4W	10Ω	±5%				1
R 915	RCE0761	R, Carbon	1/4W	220Ω	±5%	1	1	1	1
R 930	RCE0776	R, Carbon	1/4W	3.9kΩ	±5%				1
R 930	RCE0777	R, Carbon	1/4W	4.7kΩ	±5%	1	1	1	
R 931	RCE0787	R, Carbon	1/4W	33kΩ	±5%			1	1
R 905	RCE0795	R, Carbon	1/4W	150kΩ	±5%				1

Symbol	Part Code	Description				Q'ty A	B	C	D
C 901	CES0028	C, AL Elyc	10V	47μF	±10%	1	1	1	1
C 904	CCD0272	C, Ceramic	500V	1 pF	±0.25pF	1	1	1	1
C 908	CCD0287	C, Ceramic	500V	4700 pF	+100 -0%	1	1	1	1
C 912	CET0033	TC 04SM	160V	1μ		1	1	1	1
TR 901	HTC0192	Transistor	2SC641K-C			1	1	1	1
TR 906	HTC0148	Transistor	2SC458C			1	1	1	1
TR 910	HTA0277	Transistor	2SA1207S			1	1	1	1
TR 912	HTC0722	Transistor	2SC2909S			1	1	1	1
TR 931	HTA0104	Transistor	2SA778AK					1	1
D 901	HDS0437	Diode	1SS133			1	1	1	1
D 902	HDS0437	Diode	1SS133			1	1	1	1
D 910	HDS0437	Diode	1SS133			1	1	1	1

CRT

Symbol	Part Code	Description				Q'ty A	B	C	D
R 1018	RCE0738	R, Carbon	1/2W	2.2MΩ	±5%	1	1	1	
R 1030	RCE0781	R, Carbon	1/4W	10kΩ	±5%	1	1	1	
R 1031	RCE0793	R, Carbon	1/4W	100kΩ	±5%	1	1	1	
J 1001	8390152	Socket	1339 (CRT)			1	1	1	
PEF-626		PCB	PB-14			R	R	R	

CRT

Symbol	Part Code	Description				Q'ty A	B	C	D
R 1018	RCE0738	R, Carbon	1/2W	2.2MΩ	±5%				1
R 1030	RCE0777	R, Carbon	1/4W	4.7kΩ	±5%				1
R 1031	RCE0793	R, Carbon	1/4W	100kΩ	±5%				1
R 1032	RCE0757	R, Carbon	1/4W	100Ω	±5%				1
J 1001	8390152	Socket	1339 (CRT)						1
PEF-627		PCB	PB-14						R

⑧ POWER SUPPLY

Symbol	Part Code	Description				Q'ty A	B	C	D
R 1101	RCE0793	R, Carbon	1/4W	100kΩ	±5%	1	1	1	1
R 1102	RCE0769	R, Carbon	1/4W	1.0kΩ	±5%	1	1	1	1
R 1103	RCE0775	R, Carbon	1/4W	3.3kΩ	±5%	1	1	1	
R 1103	RCE0774	R, Carbon	1/4W	2.7kΩ	±5%				1
R 1104	RME1096	R, Metal	1/4W	100kΩ	±1%	1	1	1	
R 1104	RME1091	R, Metal	1/4W	39.2kΩ	±5%				1
R 1105	RCE0777	R, Carbon	1/4W	4.7kΩ	±5%	1	1	1	
R 1105	RCE0775	R, Carbon	1/4W	3.3kΩ	±5%				1
R 1106	RME1086	R, Metal	1/4W	15.0kΩ	±1%	1	1	1	
R 1106	RME1084	R, Metal	1/4W	10.0kΩ	±1%				1
R 1107	RCE0785	R, Carbon	1/4W	22kΩ	±5%	1	1	1	1
R 1109	RCE0769	R, Carbon	1/4W	1kΩ	±5%	1	1	1	1
R 1110	RCE0761	R, Carbon	1/4W	220Ω	±5%	1	1	1	1
R 1110	RCE0767	R, Carbon	1/4W	220Ω	±5%	1	1	1	1
R 1121	RCE0761	R, Carbon	1/4W	220Ω	±5%	1	1	1	1
R 1124	RCE0783	R, Carbon	1/4W	15kΩ	±5%	1	1	1	1
R 1125	RCE0753	R, Carbon	1/4W	47Ω	±5%	1	1	1	1
R 1131	RCE0685	R, Carbon	1/2W	22Ω	±5%	1	1	1	
R 1131	RCE0689	R, Carbon	1/2W	47Ω	±5%				1
R 1132	RCE0689	R, Carbon	1/2W	47Ω	±5%				1
R 1141	RCE0800	R, Carbon	1/4W	470kΩ	±5%	1	1	1	1
R 1142	RCE0787	R, Carbon	1/4W	33kΩ	±5%	1	1	1	1
C 1101	CES0201	C, AL Elyc	160V	47μF		1	1	1	1
C 1102	CES0203	C, AL Elyc	250V	47μF		1	1	1	1
C 1109	CES0201	C, AL Elyc	160V	47μF		1	1	1	1
C 1110	CQA0092	C, Plastic	50V	0.0015μF		1	1	1	1
C 1111	CES0204	C, AL Elyc	25V	2200μF		1	1	1	1
C 1112	CES0028	C, AL Elyc	10V	47μF/LB		1	1	1	1
C 1121	CES0204	C, AL Elyc	25V	2200μF		1	1	1	1
C 1121	CES0028	C, AL Elyc	10V	47μF/LB		1	1	1	1
C 1124	CQA0101	C, Plastic	50V	0.047μF	±10%	1	1	1	1
C 1131	CES0036	C, AL Elyc	25V	22μF/LB		1	1	1	1
C 1138	CES0028	C, AL Elyc	10V	47μF/LB		1	1	1	1
TR 1102	HTC0671	Transistor	2SC1505L			1	1	1	1
TR 1101	HTA0104	Transistor	2SA778AK			1	1	1	1
TR 1103	HTA0224	Transistor	2SA1029D			1	1	1	1
TR 1104	HTC0148	Transistor	2SC458C			1	1	1	1
IC 1111	ILH0109	Digital IC	HA17808P			1	1	1	1
IC 1121	ILM0342	Digital IC	M PC7808			1	1	1	1
IC 1131	ILH0108	Digital IC	HA17805P			1	1	1	1
D 1101	HDS0476	Diode	S5566J			1	1	1	1
D 1102	HDS0476	Diode	S5566J			1	1	1	1
D 1103	HDS0476	Diode	S5566J			1	1	1	1
D 1104	HDS0476	Diode	S5566J			1	1	1	1
D 1105	HDS0476	Diode	S5566J			1	1	1	1
D 1106	HDS0476	Diode	S5566J			1	1	1	1
D 1111	HDS0475	Diode	S5566B			1	1	1	1
D 1112	HDS0475	Diode	S5566B			1	1	1	1
D 1113	HDS0475	Diode	S5566B			1	1	1	1
D 1114	HDS0475	Diode	S5566B			1	1	1	1
P 1101	JBX0703	Connector	1-171825-0			1	1	1	1
PEF-621		PCB	PB-15			R	R	R	R

SCALE, ILLUM LAMP

Symbol	Part Code	Description		Q'ty A	B	C	D
PL 1401	8400068	Lamp	8V			1	1
PL 1402	8400068	Lamp	8V			1	1
PL 1403	8400068	Lamp	8V			1	1
PEF-623		PCB	PB-15			R	R

PANEL and OTHERS

Symbol	Part Code	Description		Q'ty A	B	C	D
J 1102	JJC0026	Connector	CM3 (C-170)	1	1	1	1
J 1103	3142147	Unit PWP	S-17221 (100/120/220/240V)	1	1	1	1
S 1101	8400067	SW, PB	SDV 3P	1	1	1	1
T 1101	3173880	XFMR	For V-211,212, 222, 422	1	1	1	1
D 1110	HDS0408	Diode	SR503D with mount(red)	1	1	1	1
TR 1310	HTD0155	Transistor	2SD313E			1	1

⑨ RV/LAMP

Symbol	Part Code	Description				Q'ty A	Q'ty B	Q'ty C	Q'ty D
R 932	RCE0737	R, Carbon	1/2W	1.8MΩ	±5%			1	
R 932	RCE0738	R, Carbon	1/2W	2.2MΩ	±5%				1
R 933	RMW0008	R, Metal	VR37-15MΩ		±5%	1	1	1	1
R 1019	RCE0793	R, Carbon	1/4W	100kΩ	±5%			1	
R 1019	RCE0798	R, Carbon	1/4W	330kΩ	±5%				1
R 1301	RCE0773	R, Carbon	1/4W	2.2kΩ	±5%				1
R 1301	RCE0775	R, Carbon	1/4W	3.3kΩ	±5%	1	1	1	
R 1310	RCE0777	R, Carbon	1/4W	4.7kΩ	±5%			1	1
R 1311	RCE0775	R, Carbon	1/4W	3.3kΩ	±5%			1	1
R 932	RCE0715	R, Carbon	1/2W	6.8kΩ	±5%	1	1		
R 1019	RCE0800	R, Carbon	1/4W	470kΩ	±5%	1	1		
R 1312	RCE0773	R, Carbon	1/4W	2.2kΩ	±5%			1	1
RV 1301	8348452	VR, Carbon	EVH-CCAK20B14			1	1	1	1
RV 1311	8348452	VR, Carbon	EVH-CCAK20B14					1	1
RV 1401	RNE0059	VR, Metal	EVHNDGK20B26			1	1	1	1
TR 1311	HTA0224	Transistor	2SA1029D					1	1
D 1310	HDS0437	Diode	1SS133					1	1
PEF-625		PCB	PB-15					R	R

7. ELECTRICAL PARTS ARRANGEMENT (WITH ADJUSTMENT LOCATIONS)

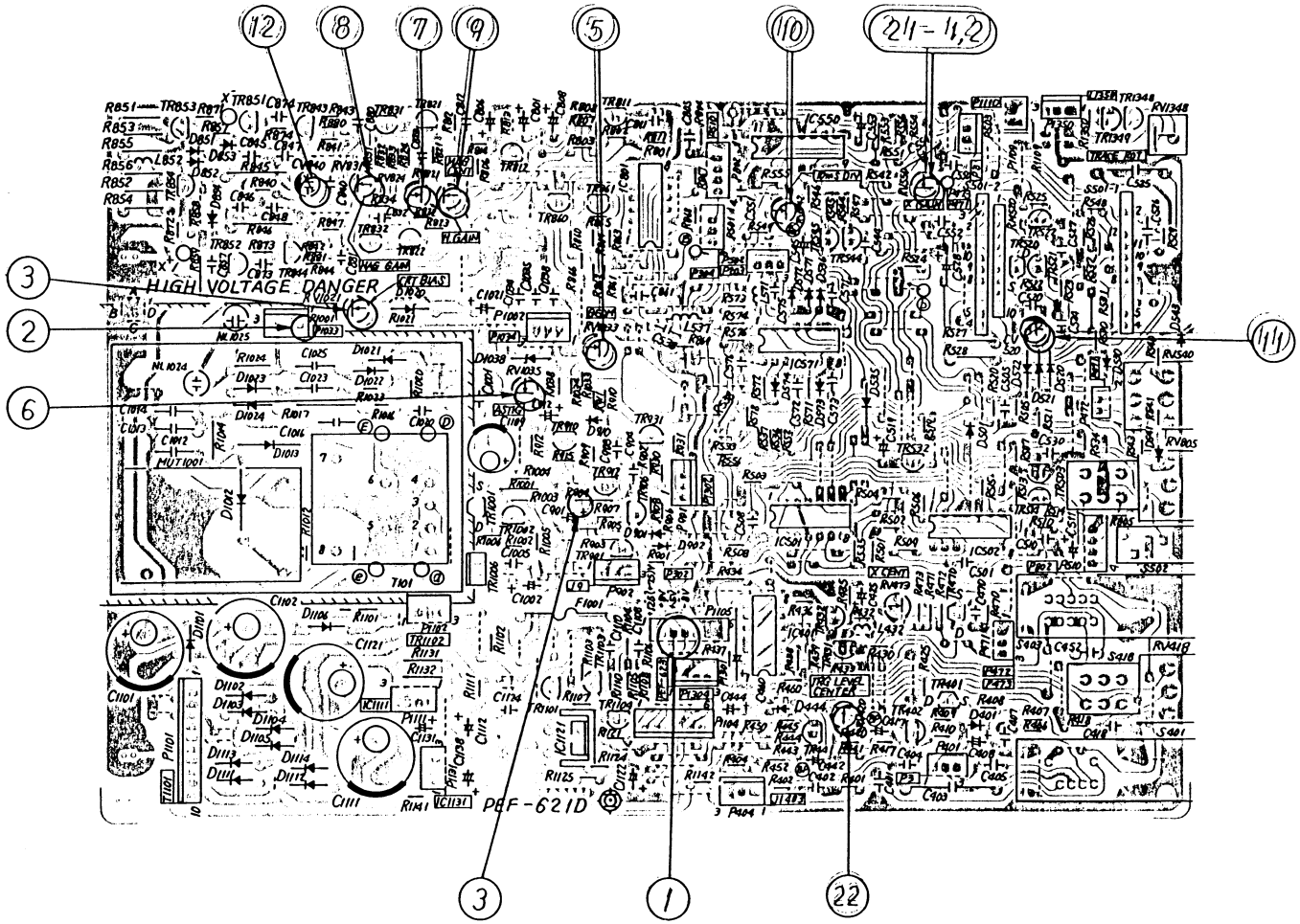

PEF-621D PCB

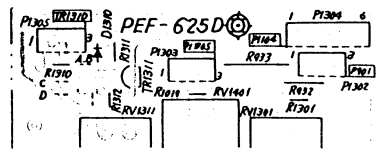

PEF-625D PCB

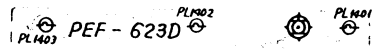

PEF-623D PCB

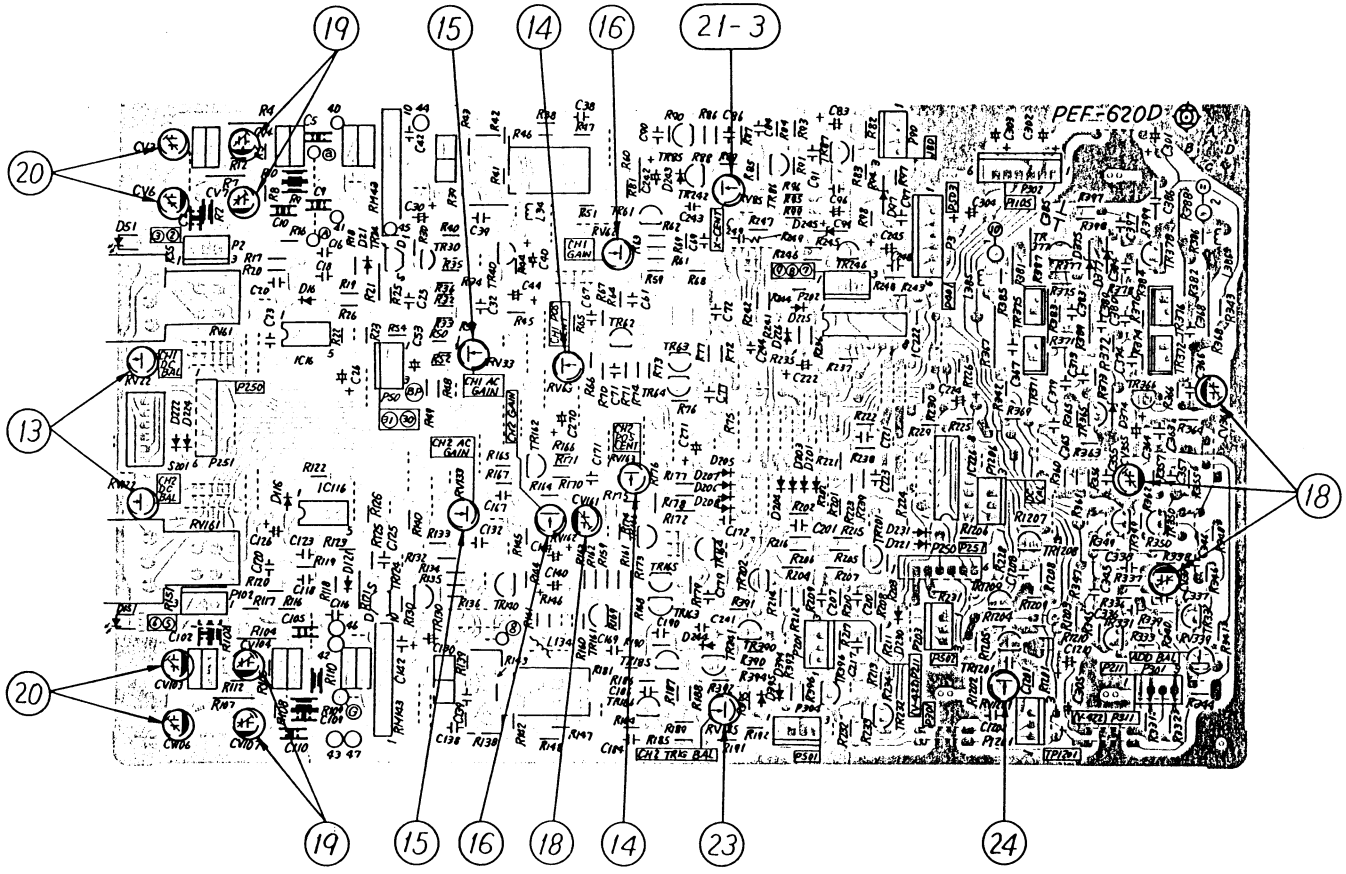

PEF-620D PCB

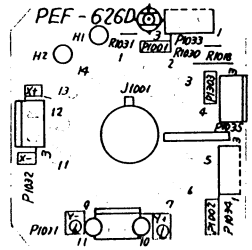

PEF-626D PCB

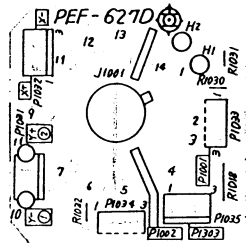

PEF-627D PCB

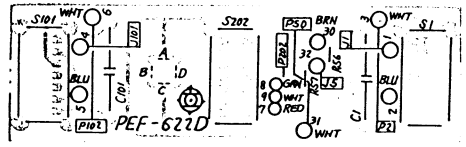

PEF-622D PCB

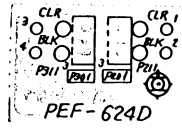

PEF-624D PCB

8. BLOCK DIAGRAM

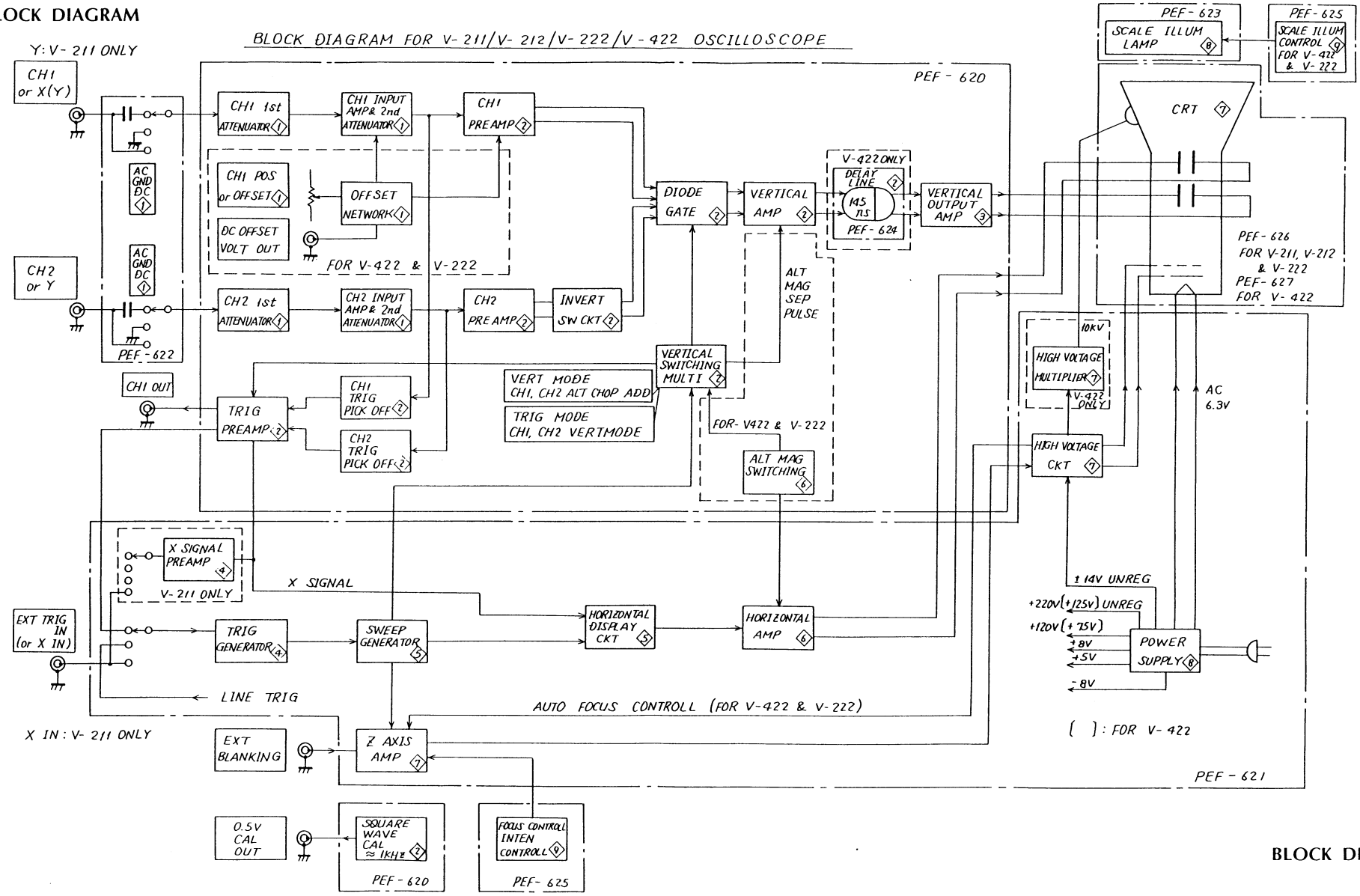

BLOCK DIAGRAM

10. SCHEMATIC DIAGRAMS

Note

1. This basic circuit diagram is subject to change without notice.
2. All resistor values in ohm: 1/4W and all capacitor values in microfarad unless indicated.
3. * Factory selected values.

DC VOLTAGE MEASUREMENT CONDITIONS

TRIG LEVEL	:	CENTER
AC-GND-DC	:	DC
VOLTS/DIV	:	10 mV
INPUT	:	CH1
TRIG MODE	:	AUTO
TRIG SOURCE	:	INT
INT TRIG	:	CH1
SWEEP TIME	:	0.5 ms
PROBE	:	10 : 1

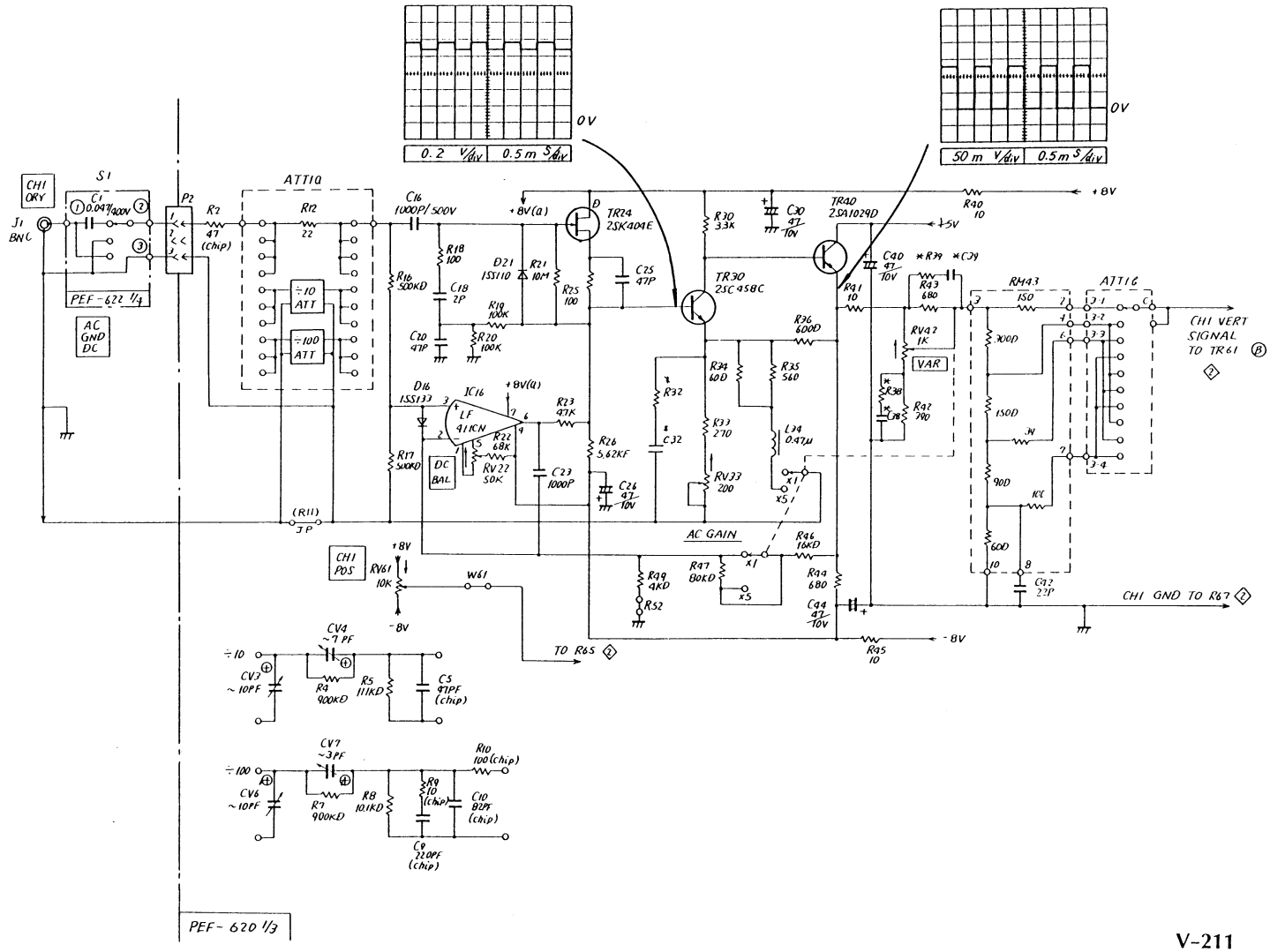

V-211

INPUT AMP ①

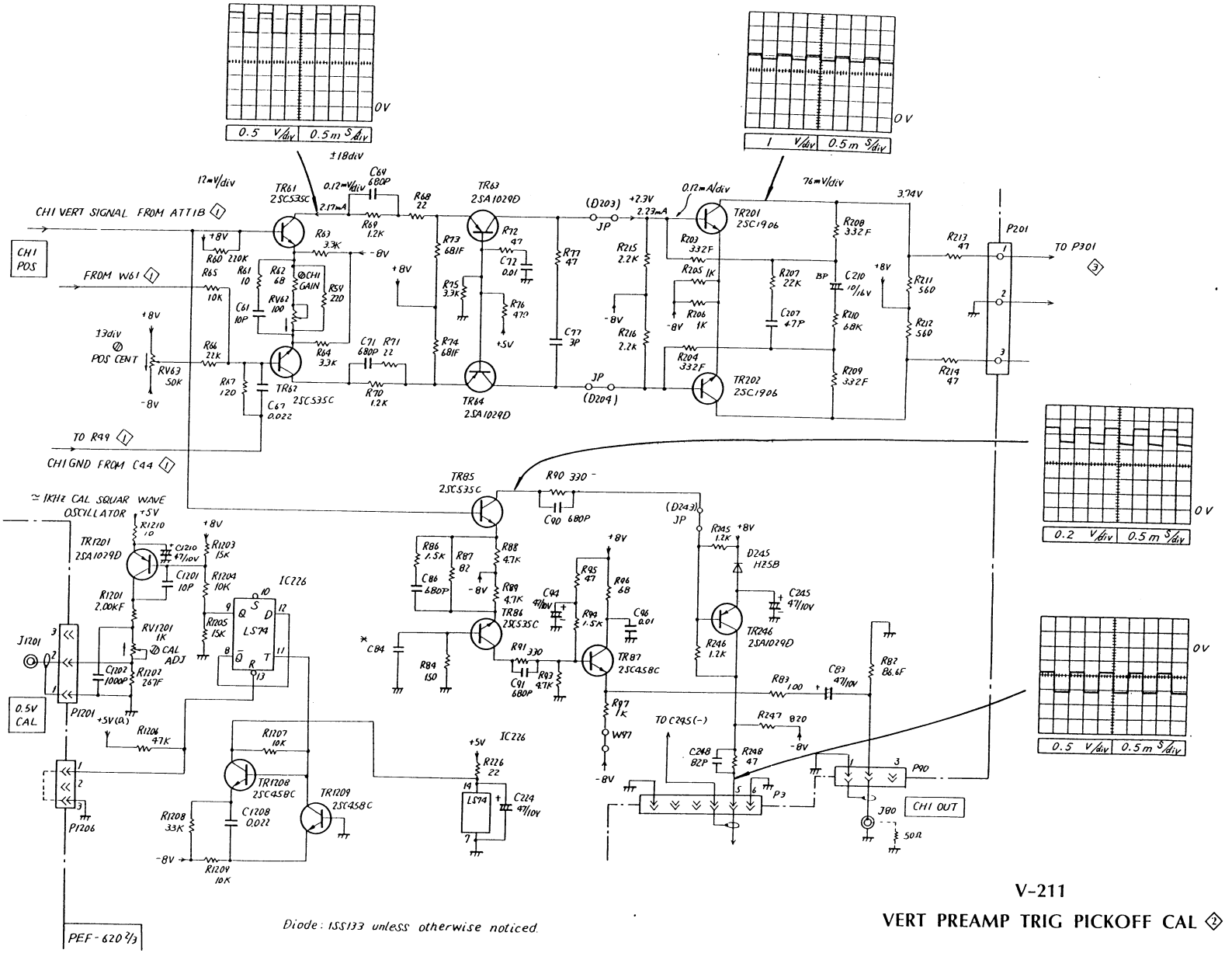

V-211

VERT PREAMP TRIG PICKOFF CAL ②

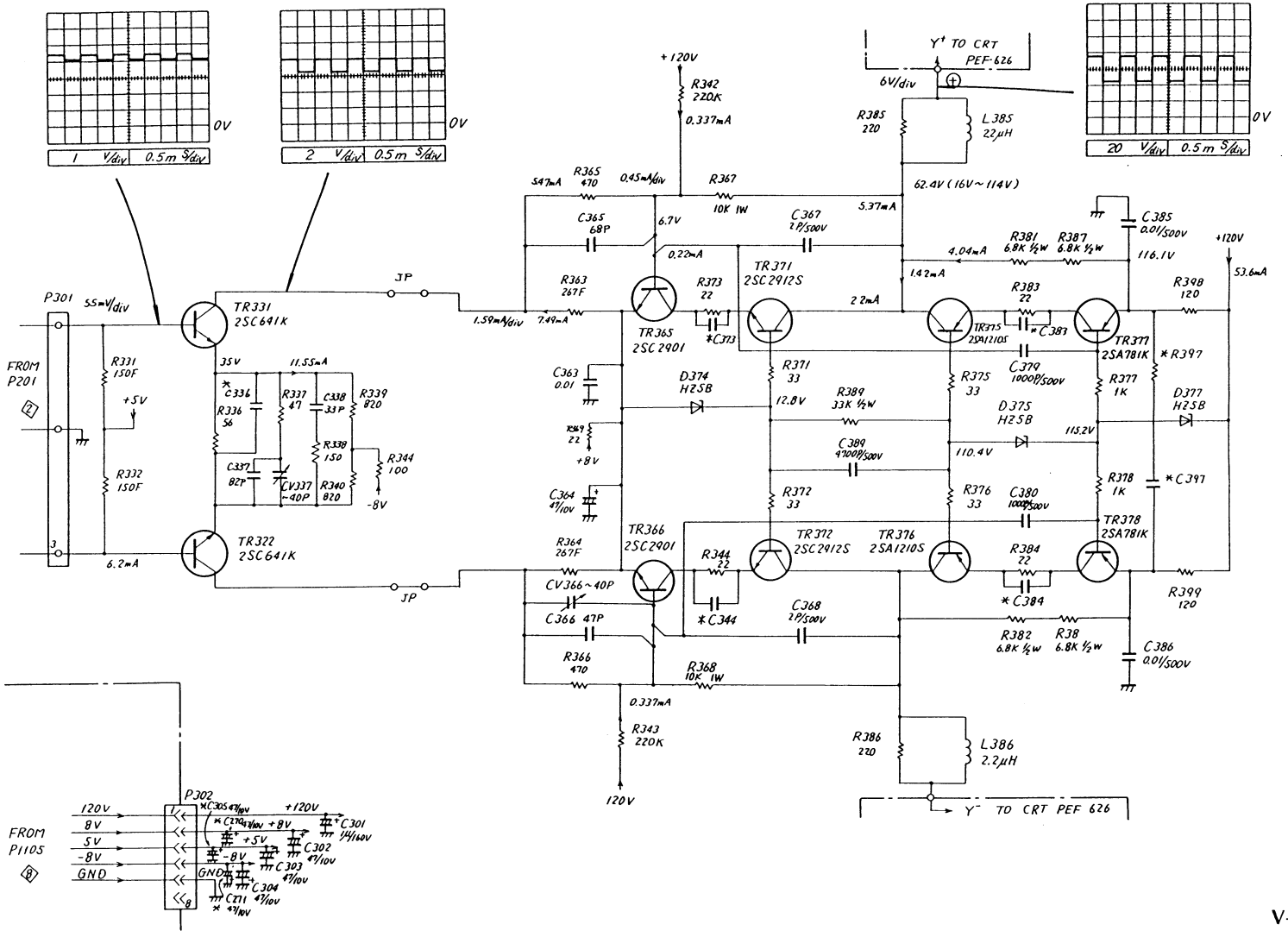
0V
1 V/div 0.5m S/div
0V
2 V/div 0.5m S/div
0V
20 V/div 0.5m S/div
Y+ TO CRT PEF-626
6V/div
+120V
R342 220K
0.337mA
R385 220
L385 22μH
62.4V (16V~114V)
R365 470
0.45mA/div
R367 10K 1W
5.37mA
C365 68P
6.7V
C367 2P/500V
C385 0.01/500V
R381 6.8K 1/2W
R387 6.8K 1/2W
4.04mA
116.1V
+120V
53.6mA
0.22mA
TR371 2SC2912S
1.42mA
R363 267F
R373 22
2.2mA
R383 22
R398 120
P301
5.5mV/div
TR331 2SC641K
JP
1.59mA/div
7.49mA
TR365 2SC2901
*C373
TR375 2SA1210S
*C383
TR377 2SA781K
FROM P201
R331 150F
+5V
35V
11.55mA
C336
R336 56
R337 47
C338 33P
R339 820
C363 0.01
D374 H25B
R371 33
R375 33
C379 1000P/500V
R377 1K
*R397
D375 H25B
D377 H25B
R332 150F
C337 82P
CV337 ~40P
R338 150
R340 820
R344 100
-8V
R349 22
+8V
12.8V
R389 33K 1/2W
115.2V
C389 4700P/500V
110.4V
C364 47/10V
R372 33
R376 33
C380 1000P/500V
R378 1K
*C397
TR322 2SC641K
6.2mA
TR366 2SC2901
TR372 2SC2912S
TR376 2SA1210S
TR378 2SA781K
R364 267F
R344 22
R384 22
CV366~40P
*C384
R399 120
C366 47P
*C344
C368 2P/500V
R382 6.8K 1/2W
R38 6.8K 1/2W
C386 0.01/500V
R366 470
R368 10K 1W
0.337mA
R343 220K
120V
R386 220
L386 2.2μH
Y- TO CRT PEF 626
P302
FROM P1105
120V
8V
5V
-8V
GND
*C305 47/10V
+120V
*C270 47/10V
+8V
+5V
C301 1μ/160V
-8V
C302 47/10V
GND
C303 47/10V
C304 47/10V
C271 47/10V

V-211

V OUT ③

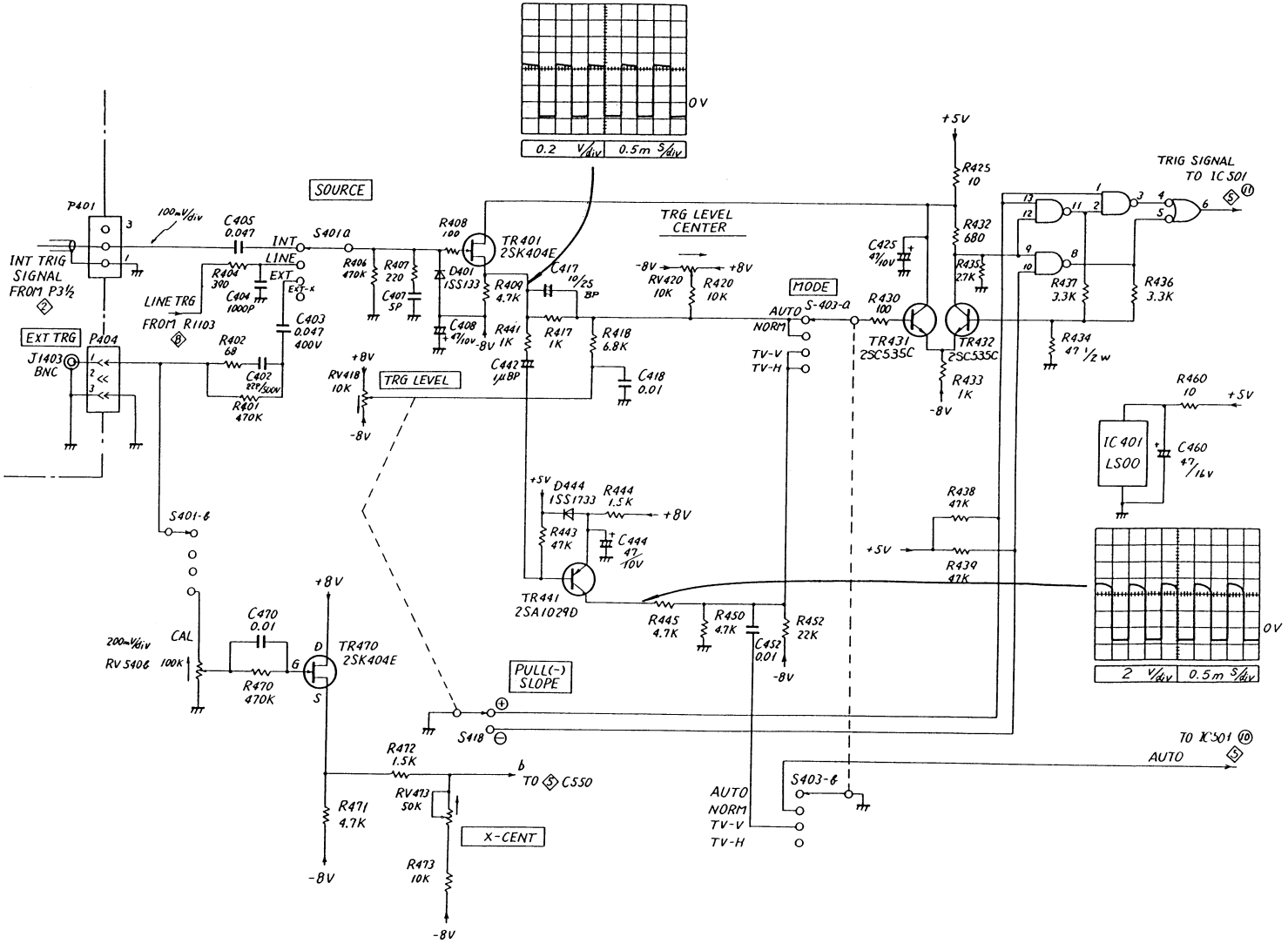

V-211
TRIG GEN

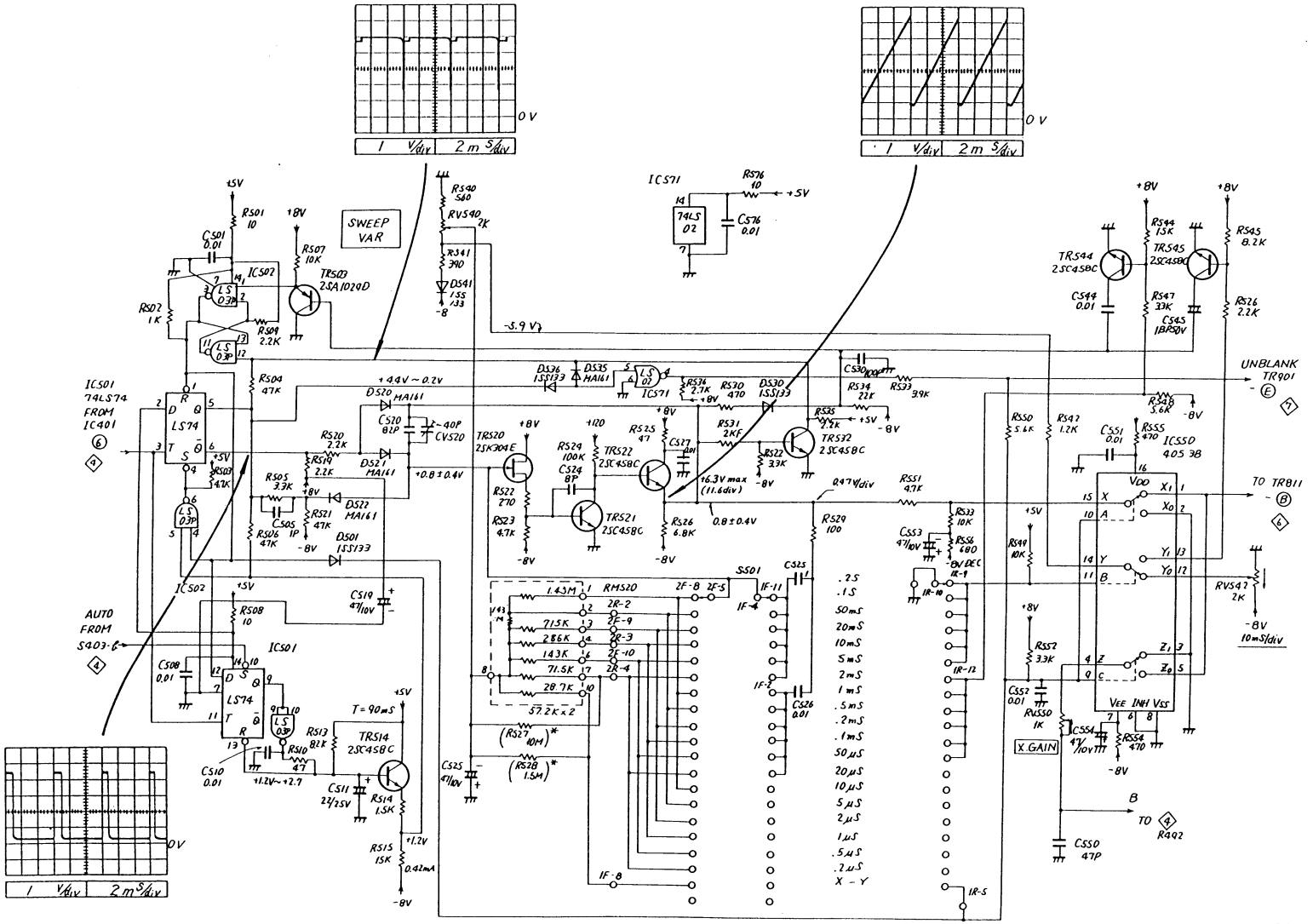

V-211

SWEEP GEN ⑤

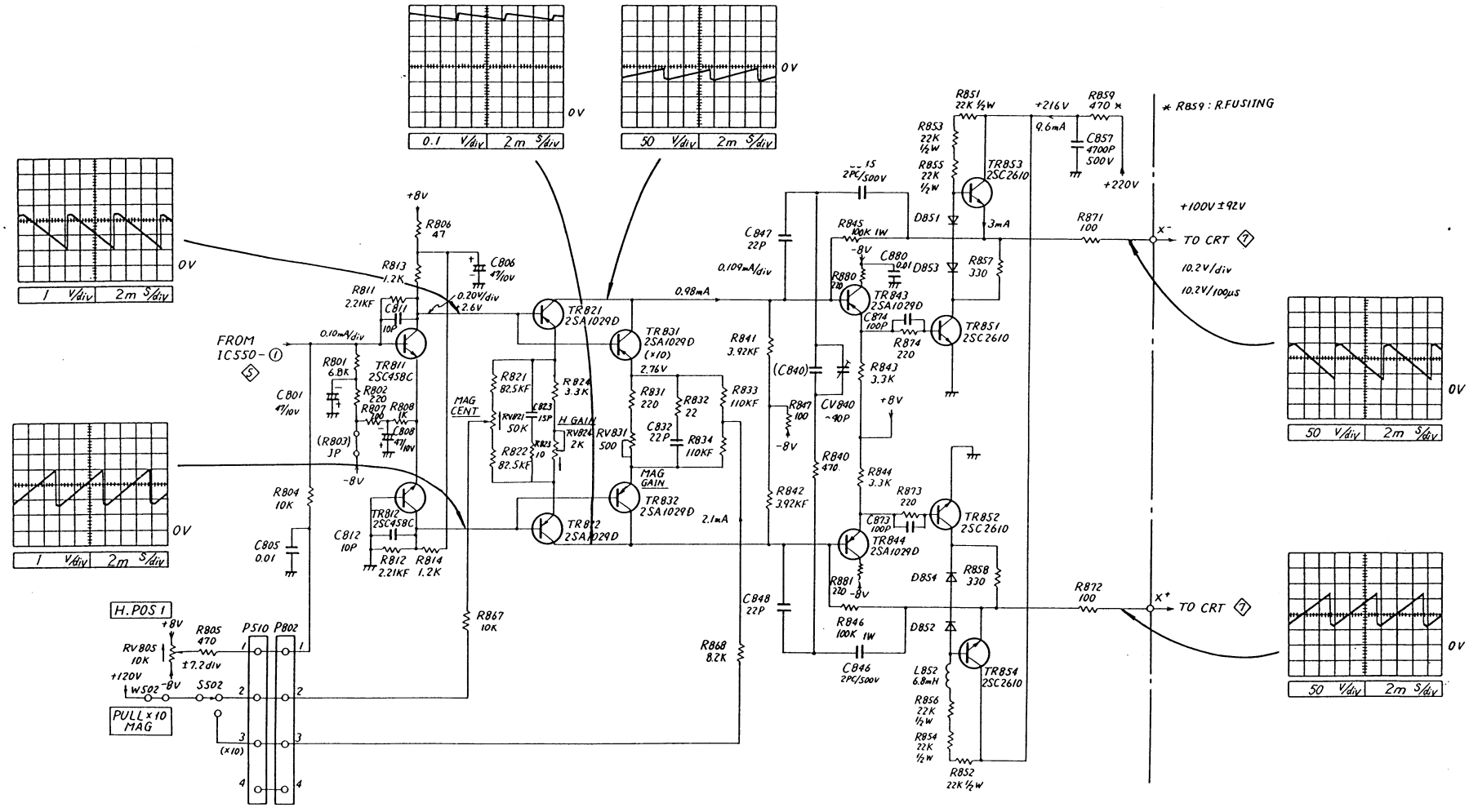
0.1 V/div 2m S/div
50 V/div 2m S/div
1 V/div 2m S/div
1 V/div 2m S/div
50 V/div 2m S/div
50 V/div 2m S/div
* R859 : R.FUSIING
+100V±92V
TO CRT 7
TO CRT 7
10.2V/div
10.2V/100μs
FROM IC550-1 5
H.POS 1
PULL×10 MAG
MAG CENT
H GAIN
MAG GAIN
TR811 2SC458C
TR812 2SC458C
TR821 2SA1029D
TR831 2SA1029D (×10)
TR832 2SA1029D
TR822 2SA1029D
TR843 2SA1029D
TR844 2SA1029D
TR851 2SC2610
TR852 2SC2610
TR853 2SC2610
TR854 2SC2610
P510 P802
R806 47
R813 1.2K
R811 2.21KF
C811 10P
C806 47/10V
C801 47/10V
R801 6.8K
R802 220
R807 100
R808 1K
C808 47/10V
(R803) JP
R804 10K
C805 0.01
C812 10P
R812 2.21KF
R814 1.2K
R805 470
RV805 10K
±7.2div
W502
S502
R867 10K
R868 8.2K
R821 82.5KF
R822 82.5KF
RV821 50K
C823 15P
R823 10
R824 3.3K
RV824 2K
RV831 500
R831 220
R832 22
C832 22P
R833 110KF
R834 110KF
R841 3.92KF
R842 3.92KF
C847 22P
C848 22P
(C840)
CV840 ~40P
R840 470
R847 100
R845 100K 1W
R846 100K 1W
C846 2PC/500V
C880 0.01
R880 220
C874 100P
R874 220
R843 3.3K
R844 3.3K
R873 220
C873 100P
R881 220
R871 100
R872 100
R851 22K 1/2W
R853 22K 1/2W
R855 22K 1/2W
R857 330
R858 330
R856 22K 1/2W
R854 22K 1/2W
R852 22K 1/2W
LB52 6.8mH
D851
D853
D854
D852
+216V
9.6mA
C857 4700P 500V
+220V
R859 470 *
0.98mA
0.109mA/div
0.20V/div
2.6V
0.10mA/div
2.76V
2.1mA
3mA
+8V
-8V

V-211

H AMP 6

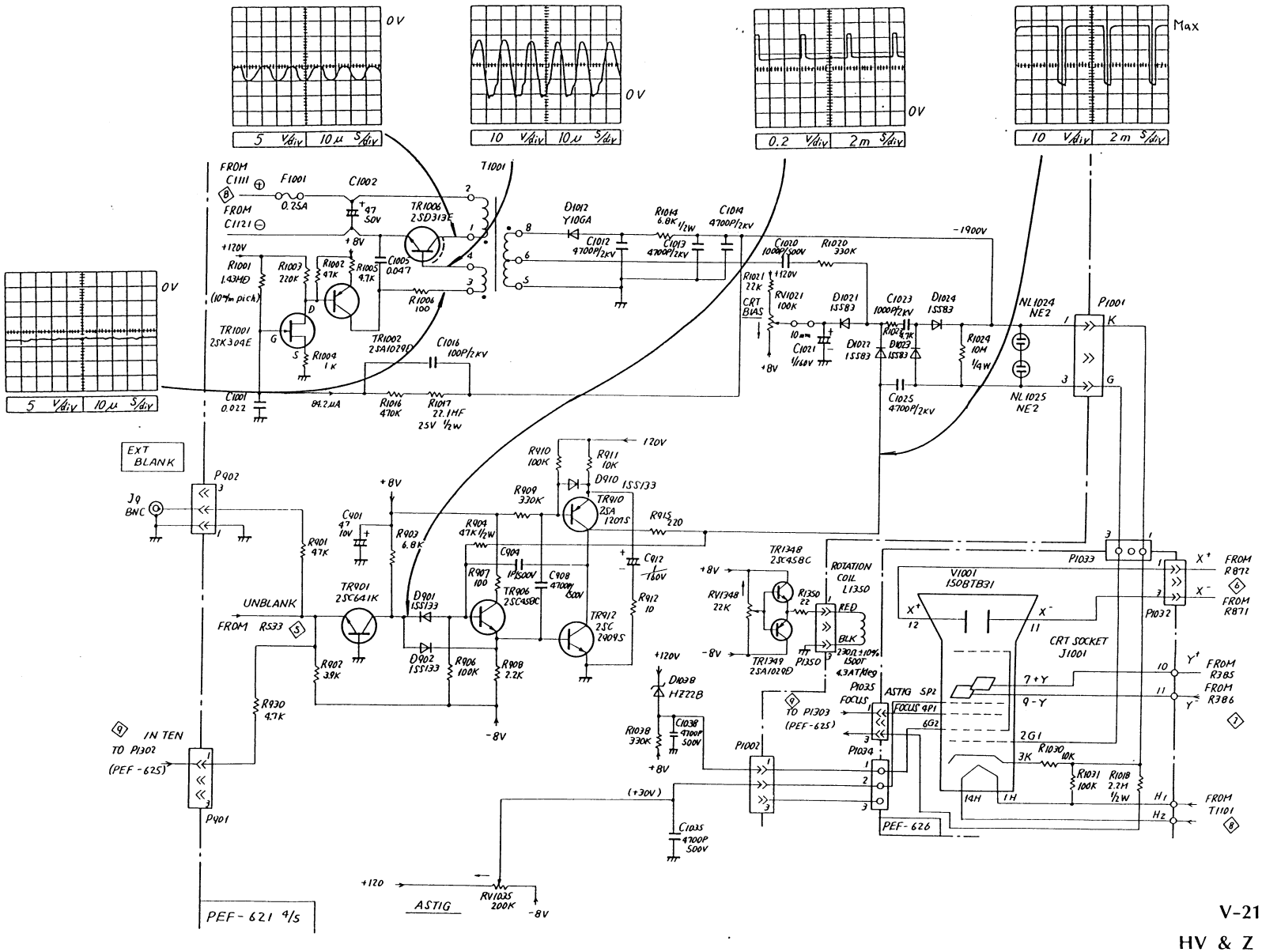

V-211

HV & Z AMP 7

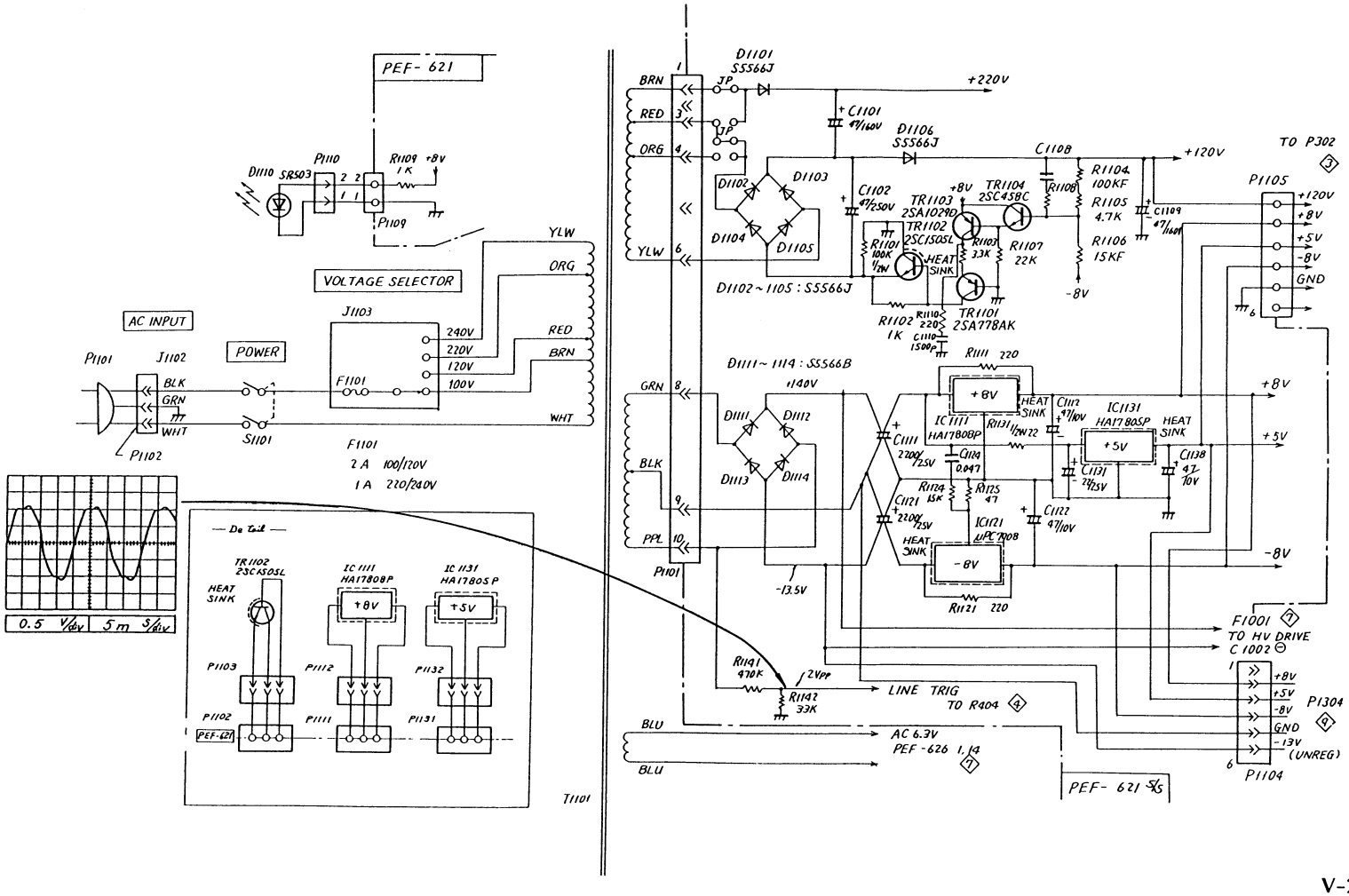

V-211

POWER SUPPLY

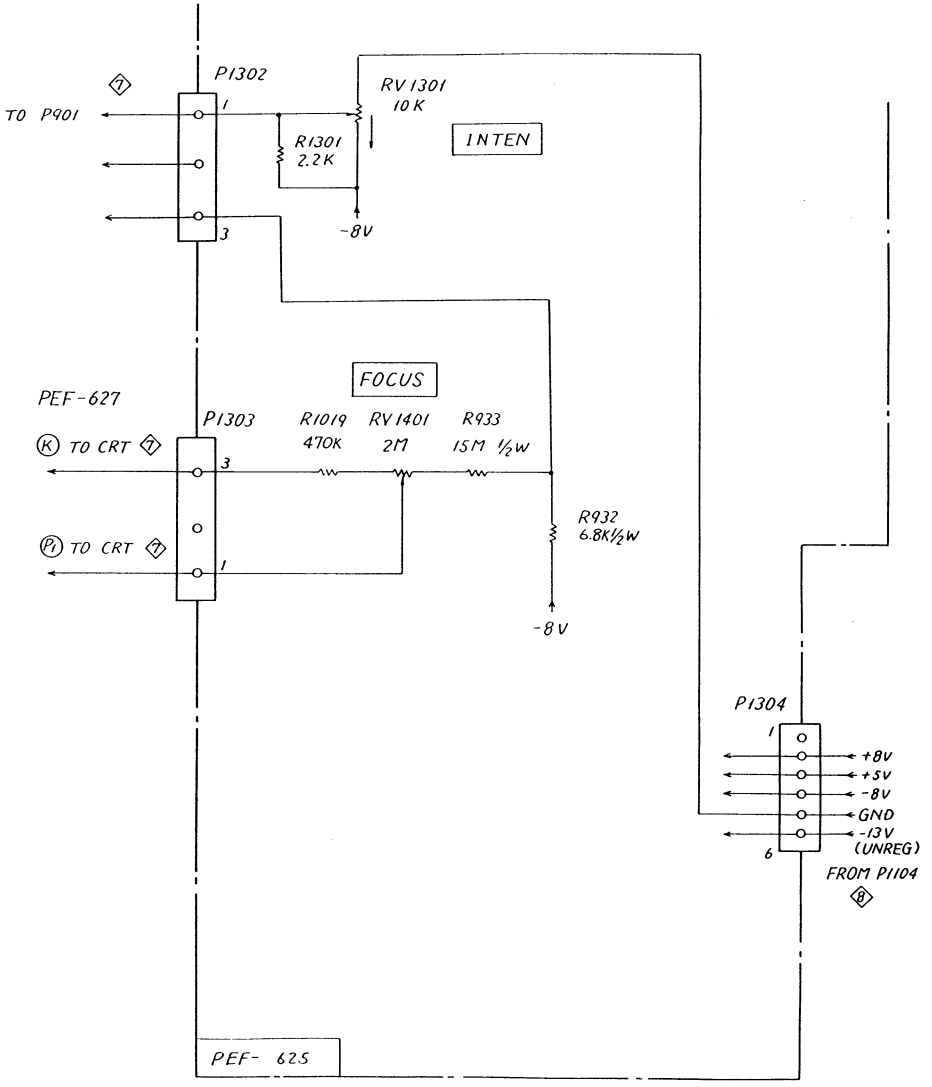
P1302
TO P901
RV 1301
10 K
INTEN
R1301
2.2K
-8V
FOCUS
PEF-627
P1303
R1019
470K
RV 1401
2M
R933
15M 1/2W
K TO CRT
P1 TO CRT
R932
6.8K 1/2W
-8V
P1304
+8V
+5V
-8V
GND
-13V
(UNREG)
FROM P1104
PEF- 625

V-211
RV/LAMP

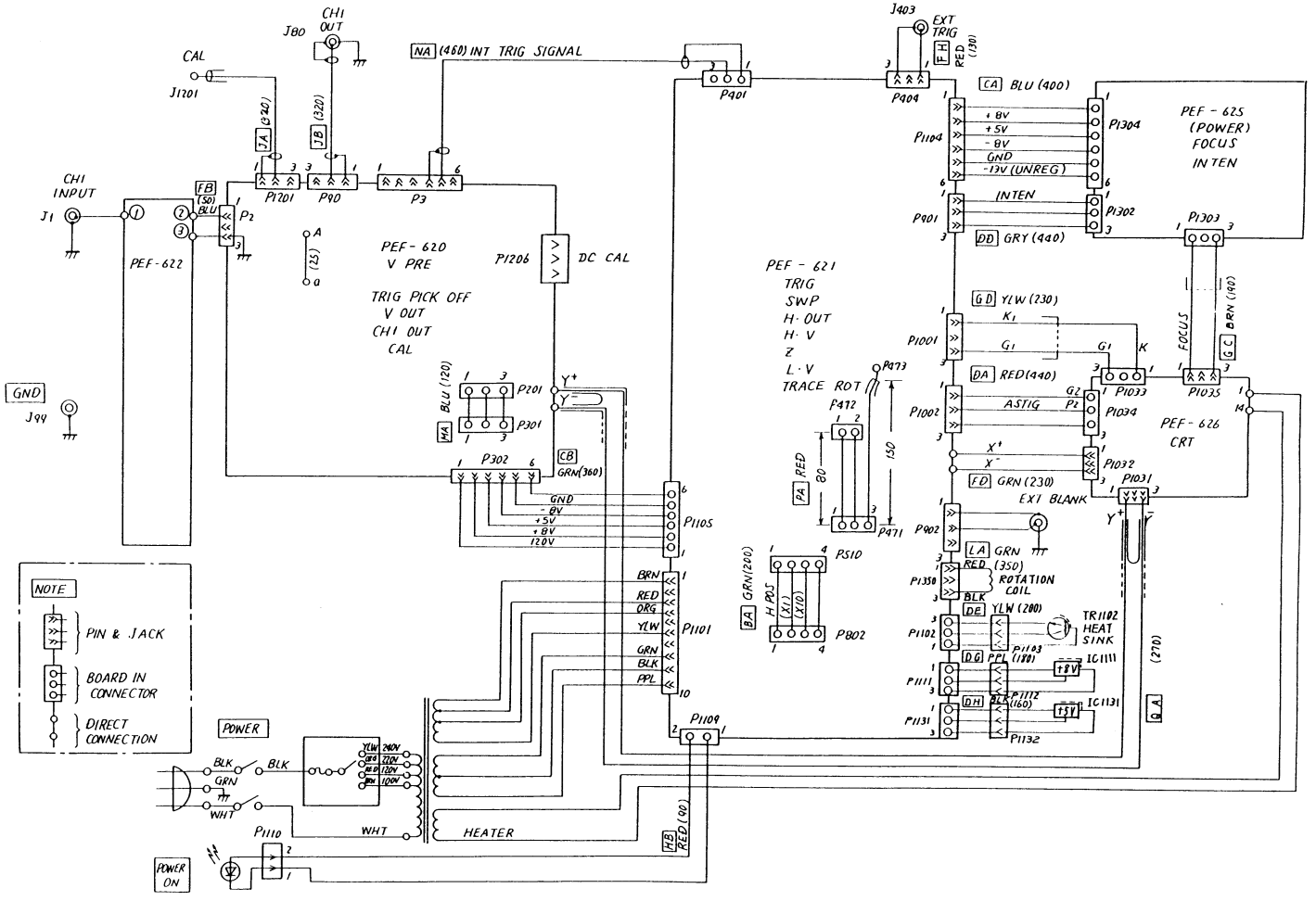

V-211
WIRING DIAGRAM

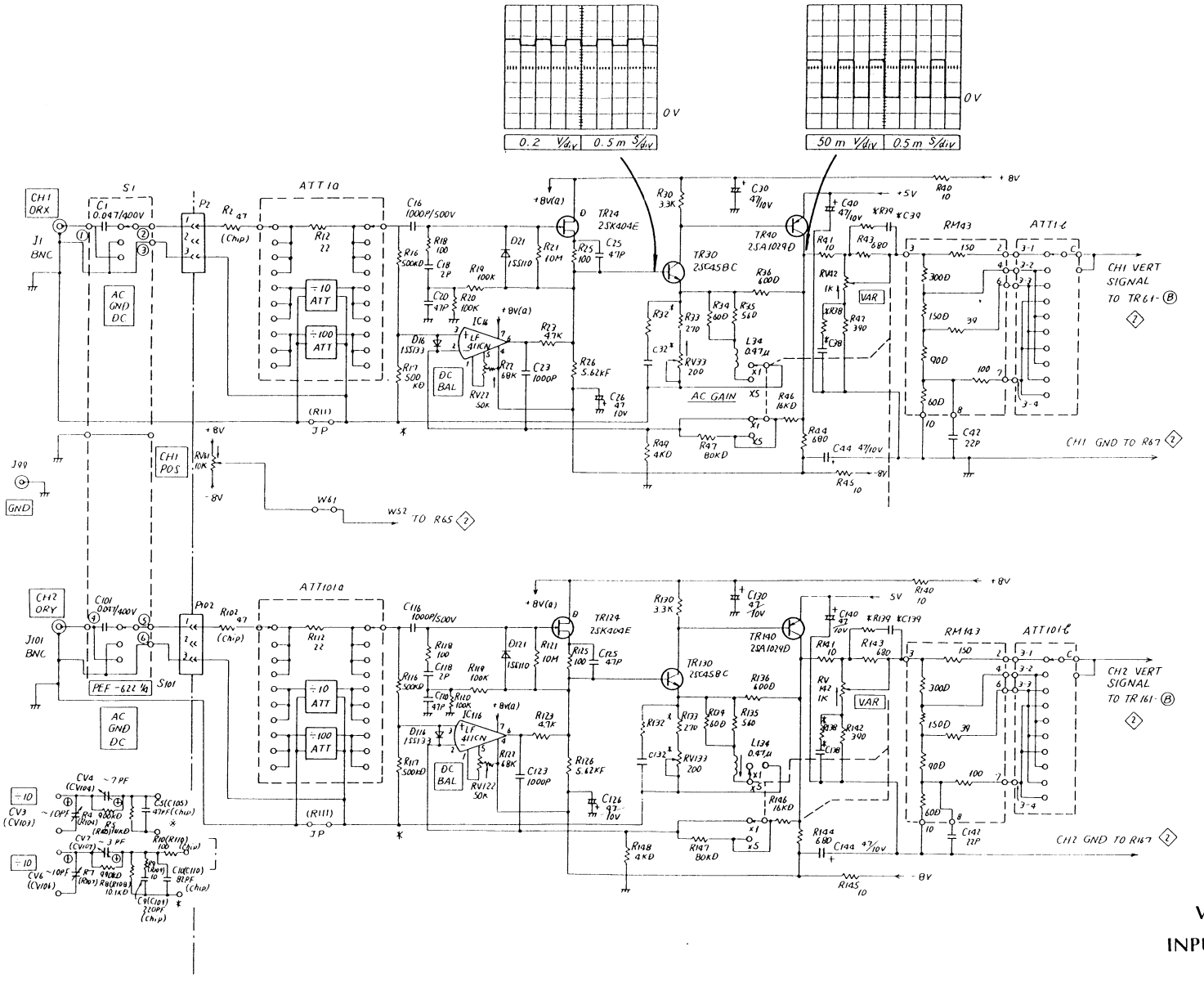

V-212

INPUT AMP ①

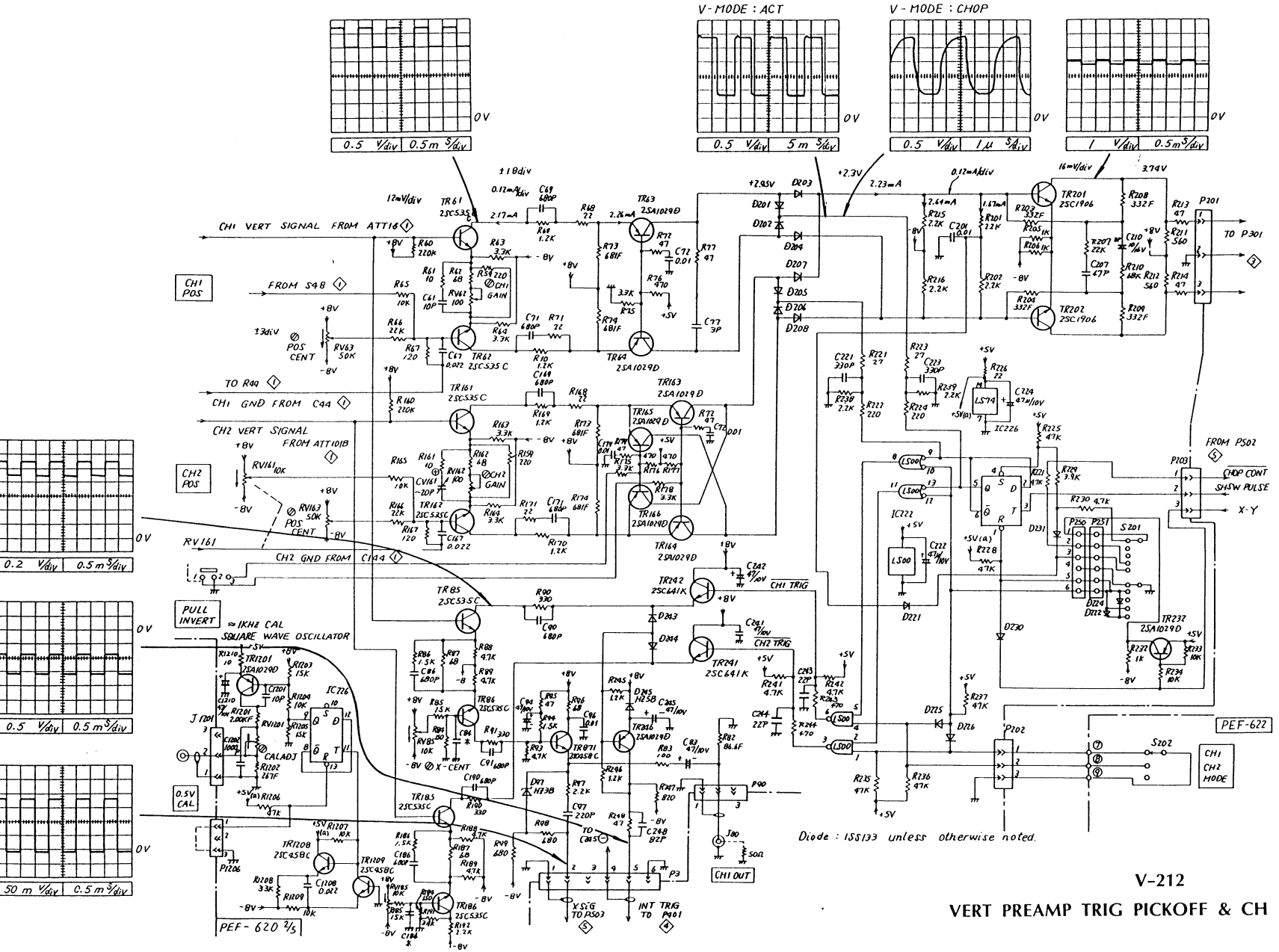

V-212

VERT PREAMP TRIG PICKOFF & CH SW MULTI ②

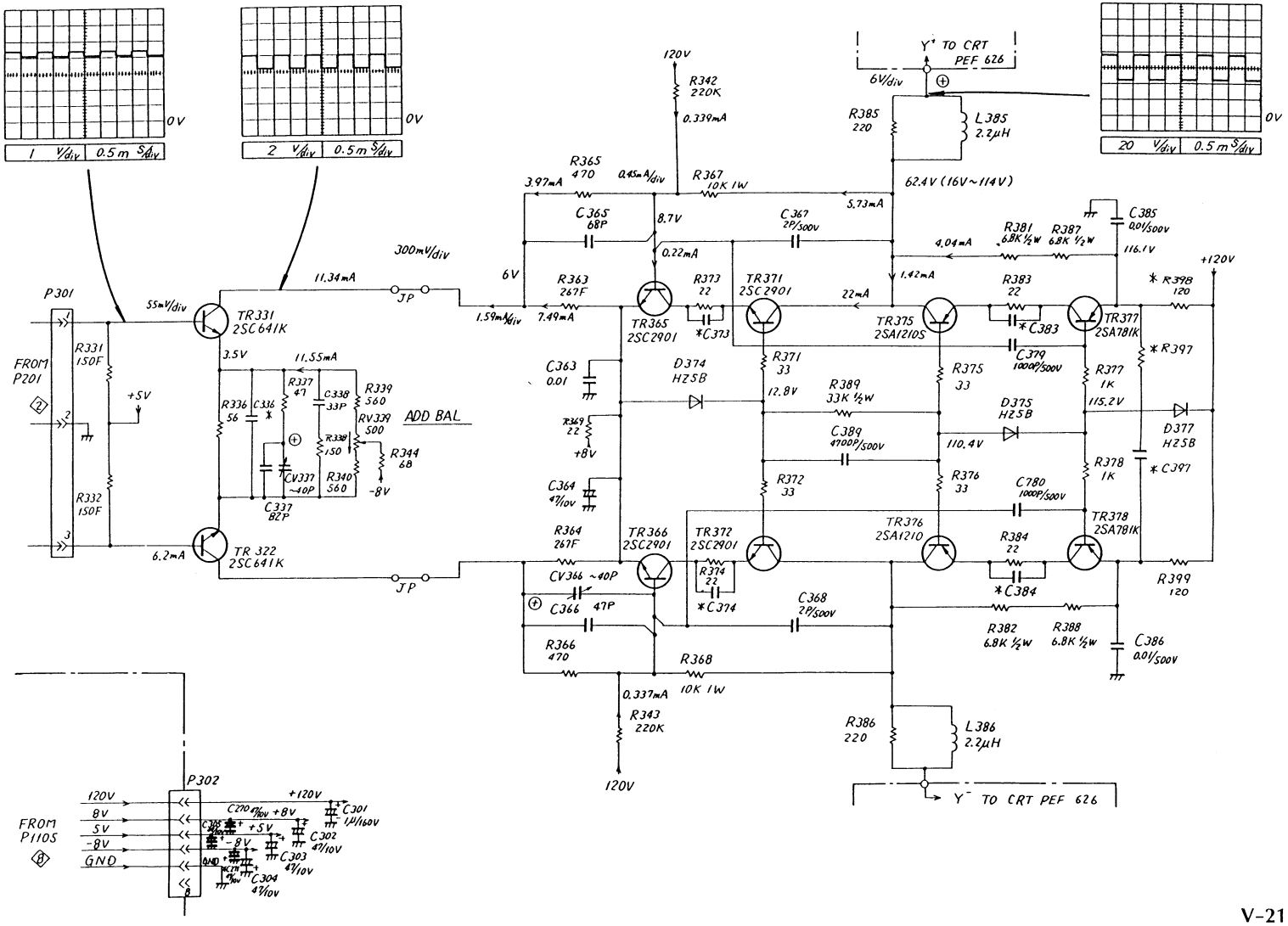
0V
1 V/div 0.5m S/div
0V
2 V/div 0.5m S/div
0V
20 V/div 0.5m S/div
Y' TO CRT PEF 626
6V/div
120V
R342 220K
0.339mA
R385 220
L385 2.2μH
62.4V (16V~114V)
R365 470
0.45mA/div
R367 10K 1W
3.97mA
5.73mA
C365 68P
8.7V
C367 2P/500V
C385 0.01/500V
R381 6.8K ½W
R387 6.8K ½W
4.04mA
116.1V
+120V
300mV/div
11.34mA
0.22mA
1.42mA
6V
R363 267F
R373 22
TR371 2SC2901
22mA
R383 22
*R398 120
P301
55mV/div
TR331 2SC641K
1.59mA/div
7.49mA
TR365 2SC2901
*C373
TR375 2SA1210S
*C383
TR377 2SA781K
JP
FROM P201
R331 150F
3.5V
11.55mA
R337 47
C338 33P
R339 560
C379 1000P/500V
*R397
R336 56
C336 *
RV339 500
ADD BAL
C363 0.01
D374 HZ5B
R371 33
R375 33
R377 1K
+5V
R338 150
R344 68
R369 22
+8V
R389 33K ½W
D375 HZ5B
115.2V
D377 HZ5B
CV337 ~40P
R340 560
-8V
C389 4700P/500V
110.4V
R378 1K
*C397
R332 150F
C337 82P
C364 47/10V
R372 33
R376 33
C780 1000P/500V
R364 267F
TR366 2SC2901
TR372 2SC2901
TR376 2SA1210
R384 22
TR378 2SA781K
6.2mA
TR 322 2SC641K
CV366 ~40P
R374 22
*C374
*C384
R399 120
C366 47P
C368 2P/500V
R382 6.8K ½W
R388 6.8K ½W
C386 0.01/500V
R366 470
R368 10K 1W
0.337mA
R343 220K
R386 220
L386 2.2μH
120V
Y' TO CRT PEF 626
P302
FROM P1105
120V
8V
5V
-8V
GND
+120V
C270 47/10V
+8V
C301 1μ/160V
C302 47/10V
+5V
-8V
C303 47/10V
C304 47/10V

V-212

V OUT ①

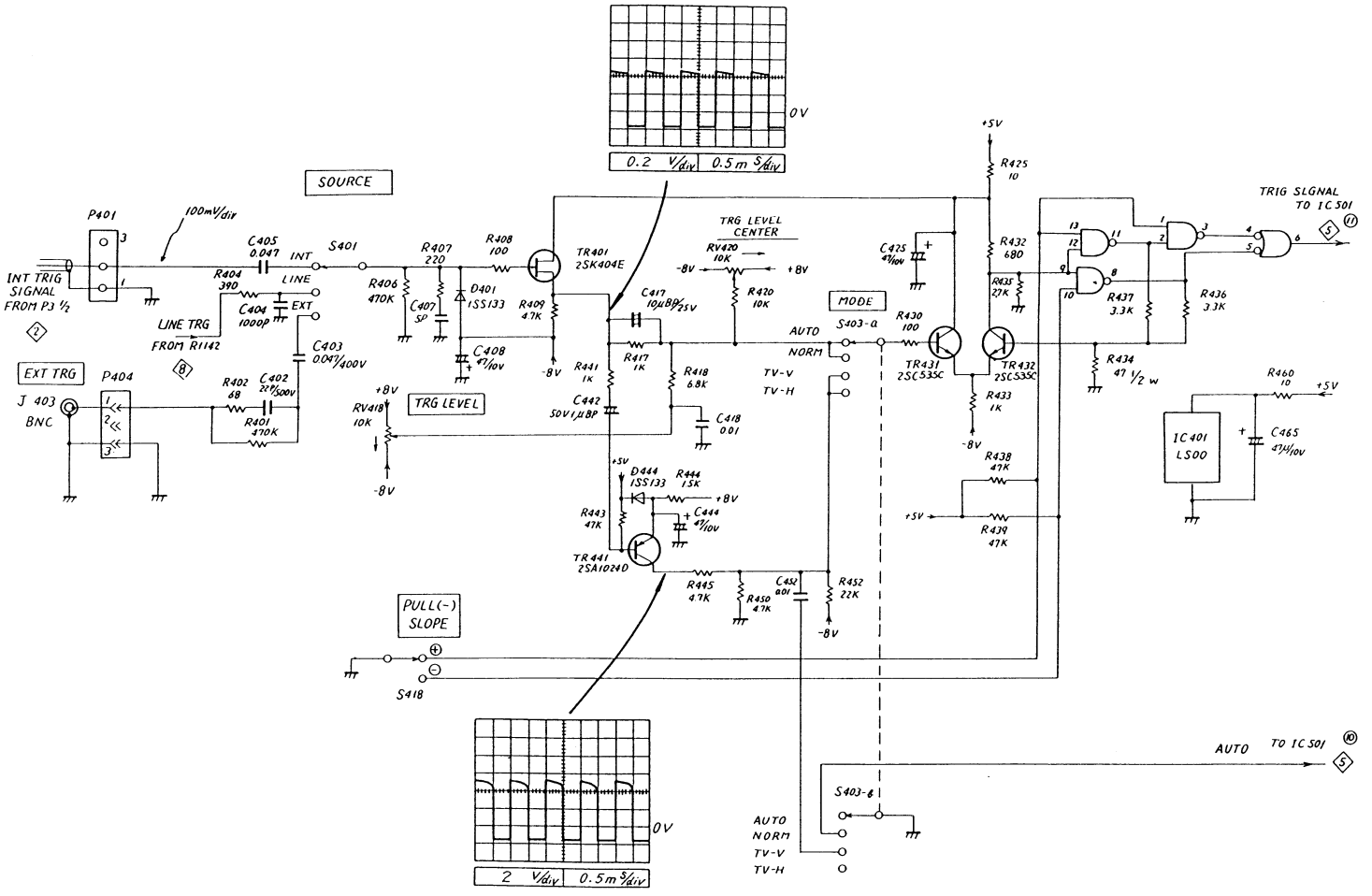

V-212

TRIG GEN ④

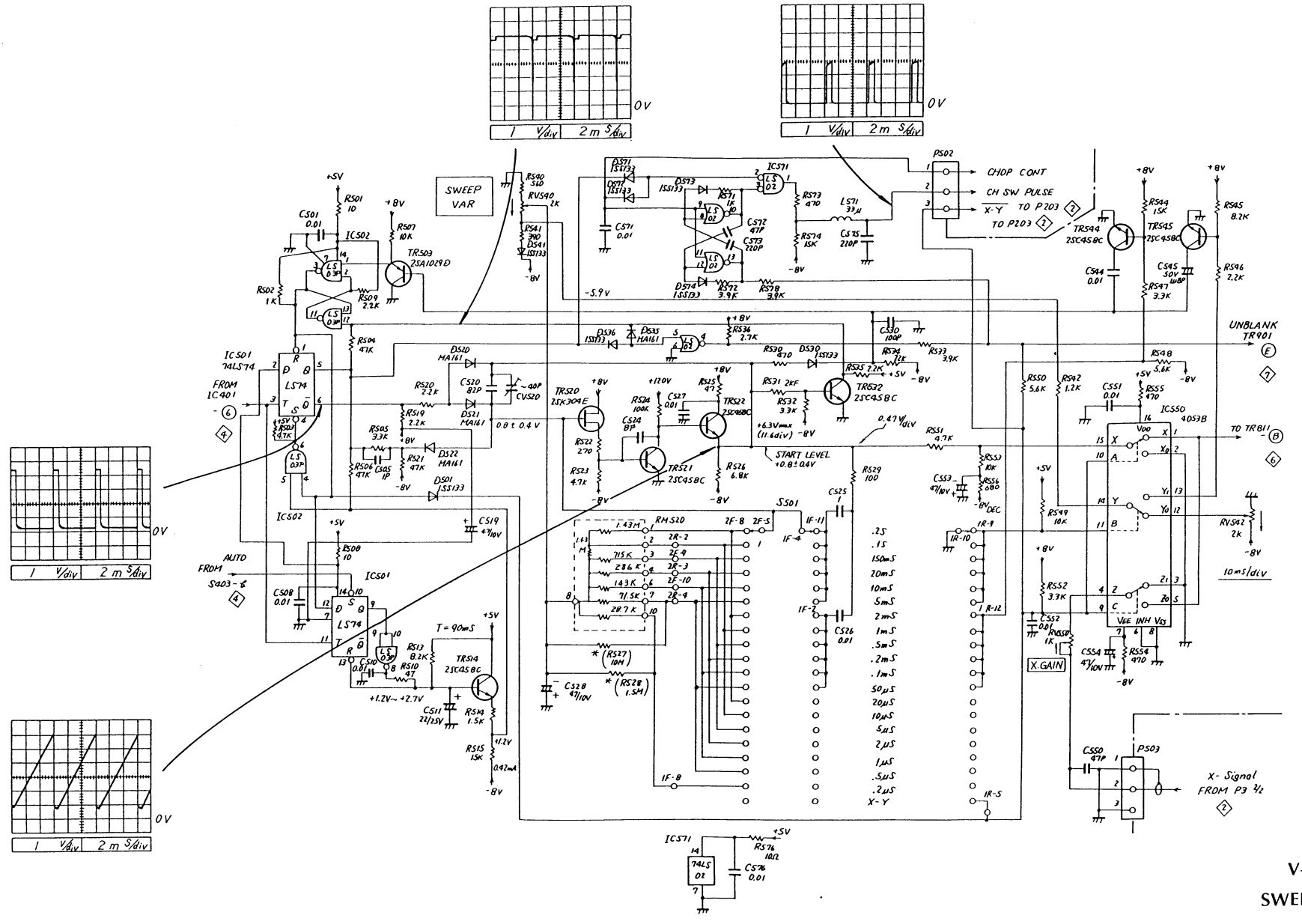

V-212

SWEEP GEN ⑤

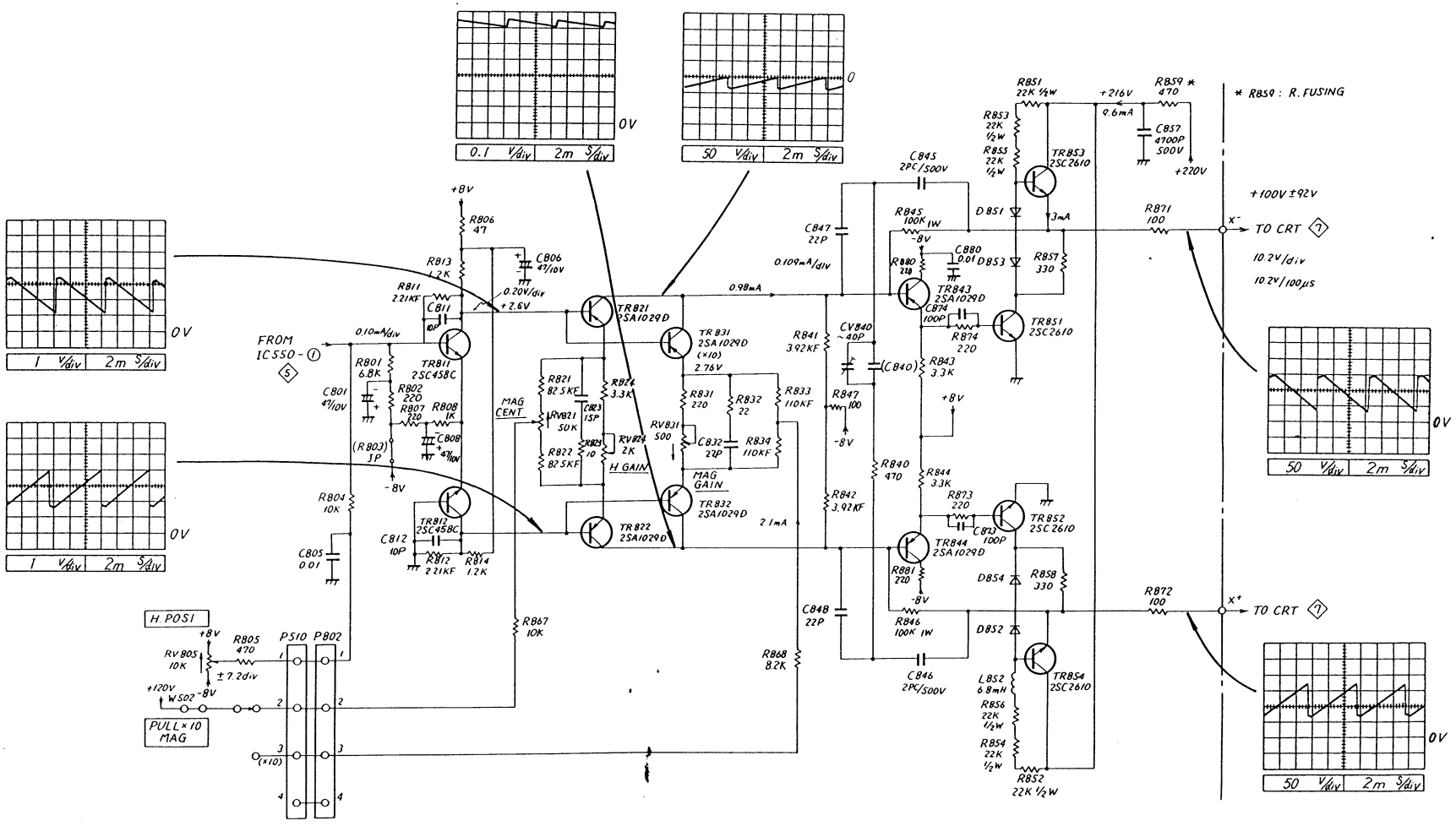
0.1 V/div 2m S/div
50 V/div 2m S/div
1 V/div 2m S/div
50 V/div 2m S/div
* R859 : R. FUSING
+100V ±92V
TO CRT
10.2V/div
10.2V/100μs
FROM IC550-①
H POS1
PULL×10 MAG
H GAIN
MAG GAIN
MAG CENT
TR821 2SA1029D
TR831 2SA1029D (×10)
TR832 2SA1029D
TR822 2SA1029D
TR811 2SC458C
TR812 2SC458C
TR843 2SA1029D
TR844 2SA1029D
TR851 2SC2610
TR852 2SC2610
TR853 2SC2610
TR854 2SC2610
P510
P802

V-212

H AMP ⑥

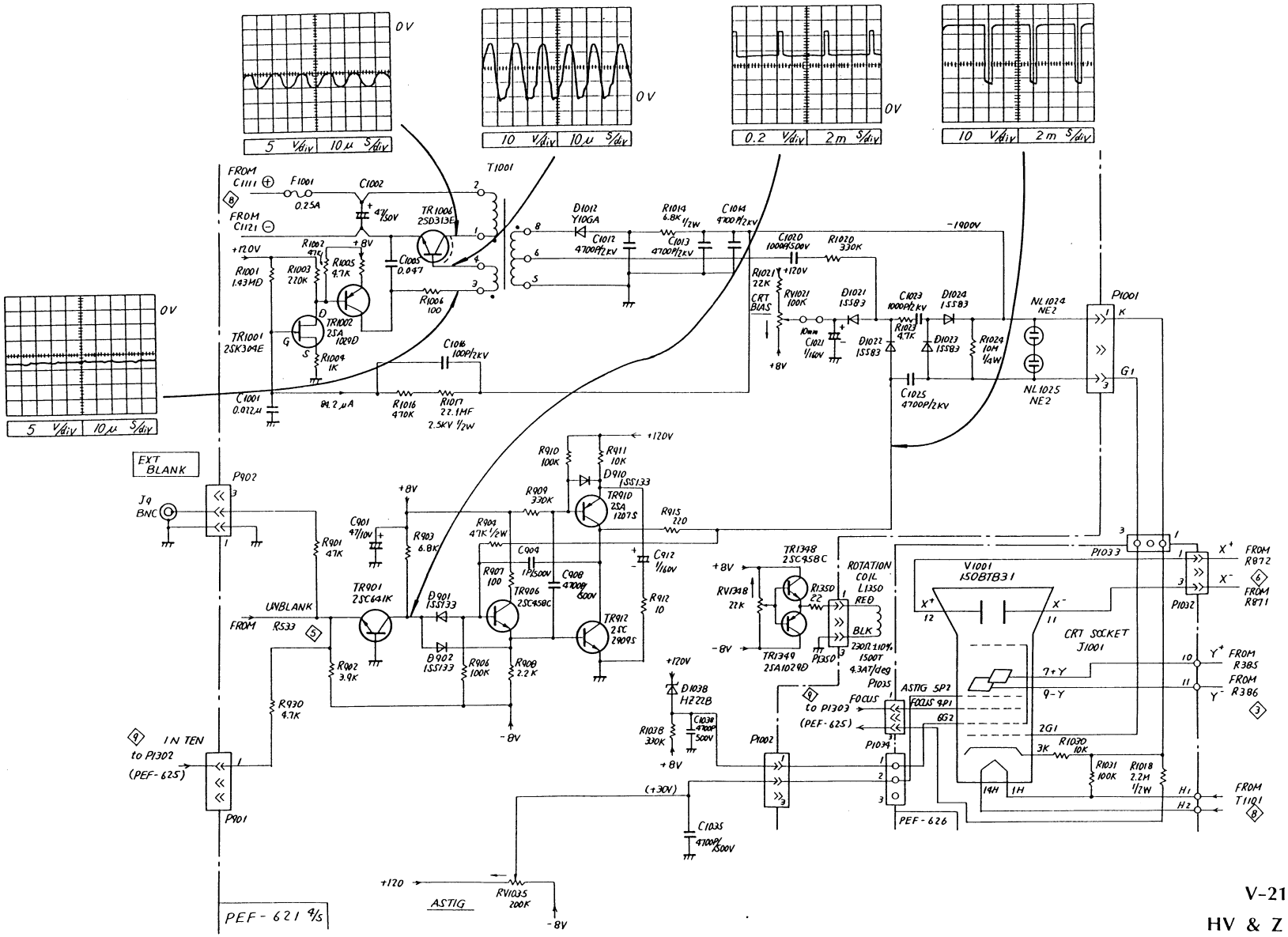

V-212

HV & Z AMP 7

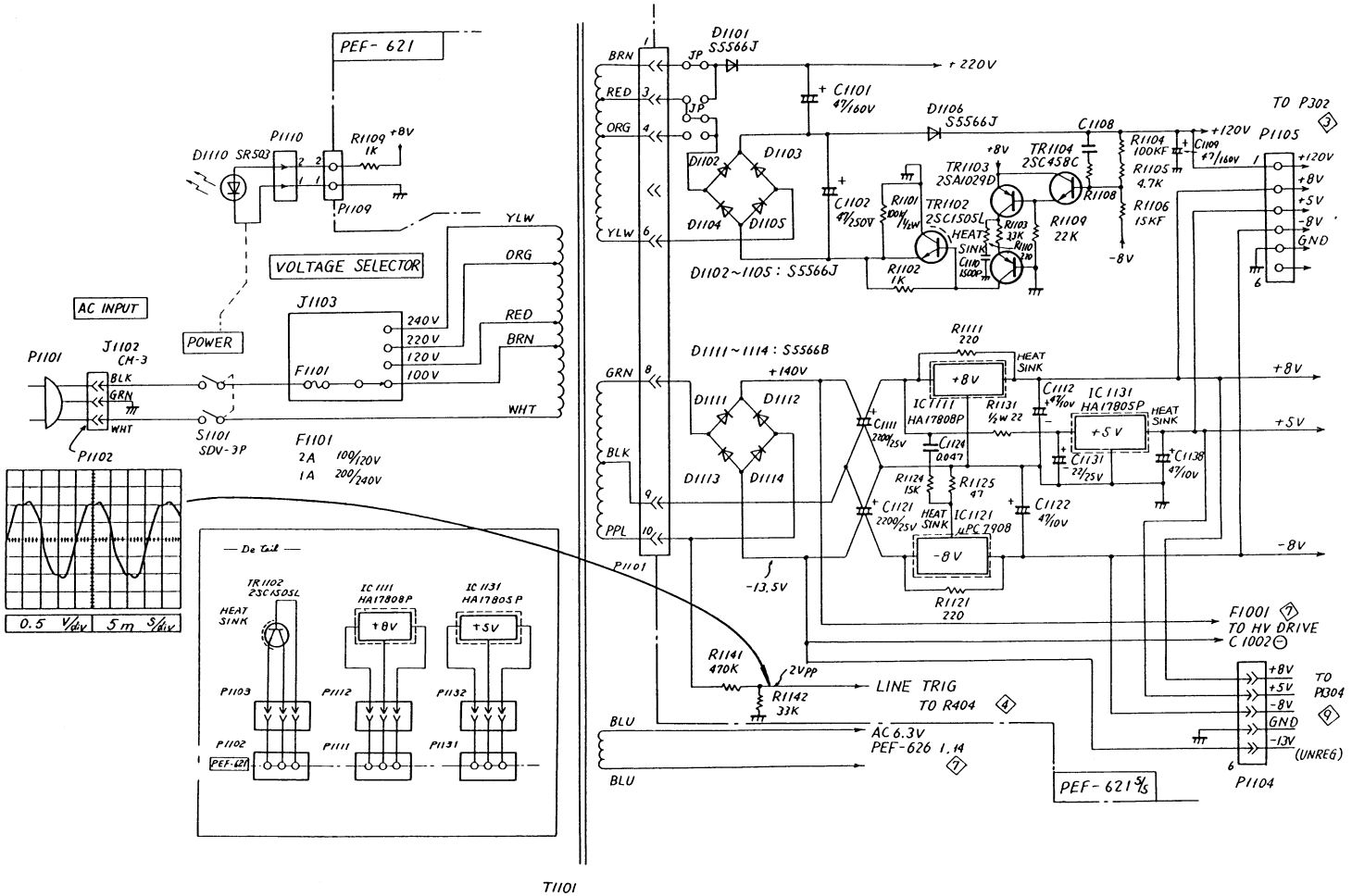

V-212

POWER SUPPLY

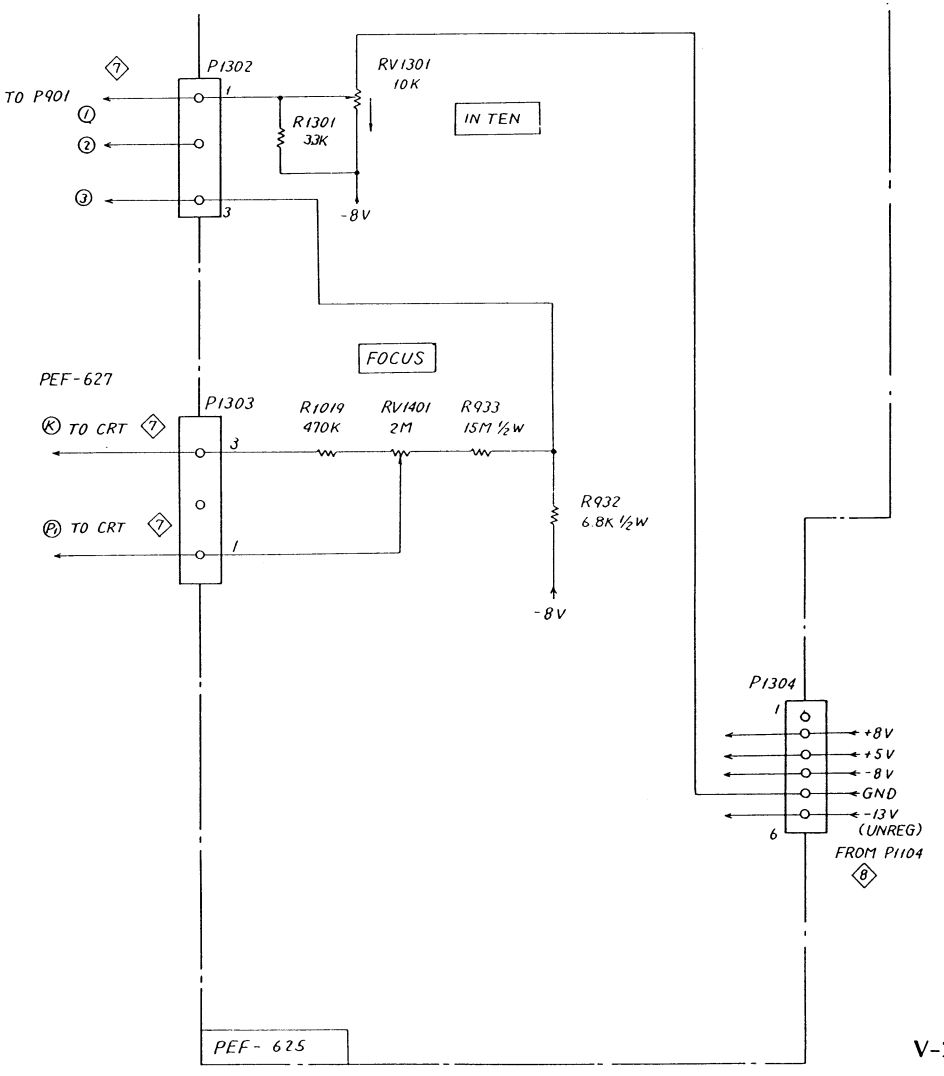

V-212

RV/LAMP 9

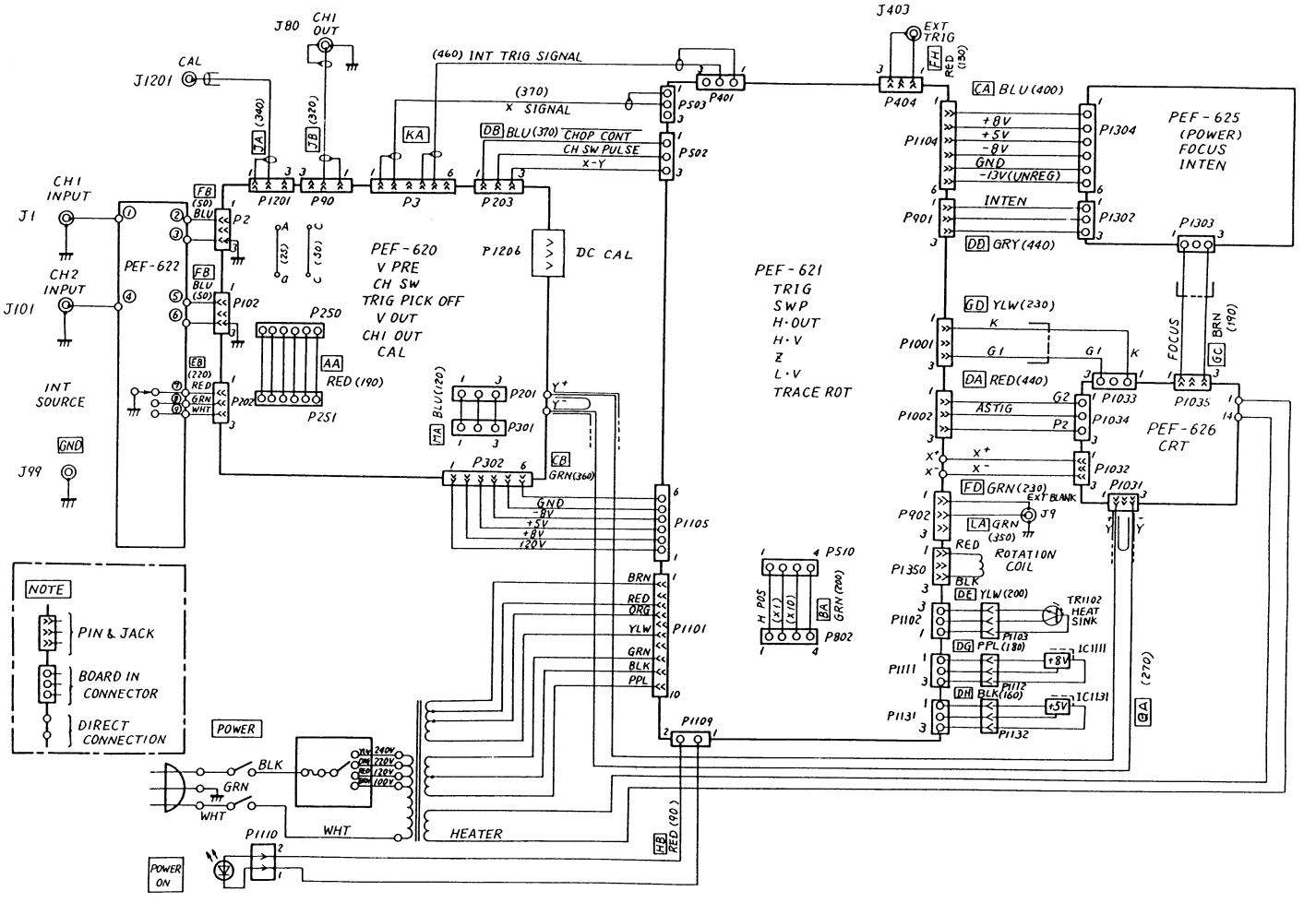

V-212
WIRING DIAGRAM

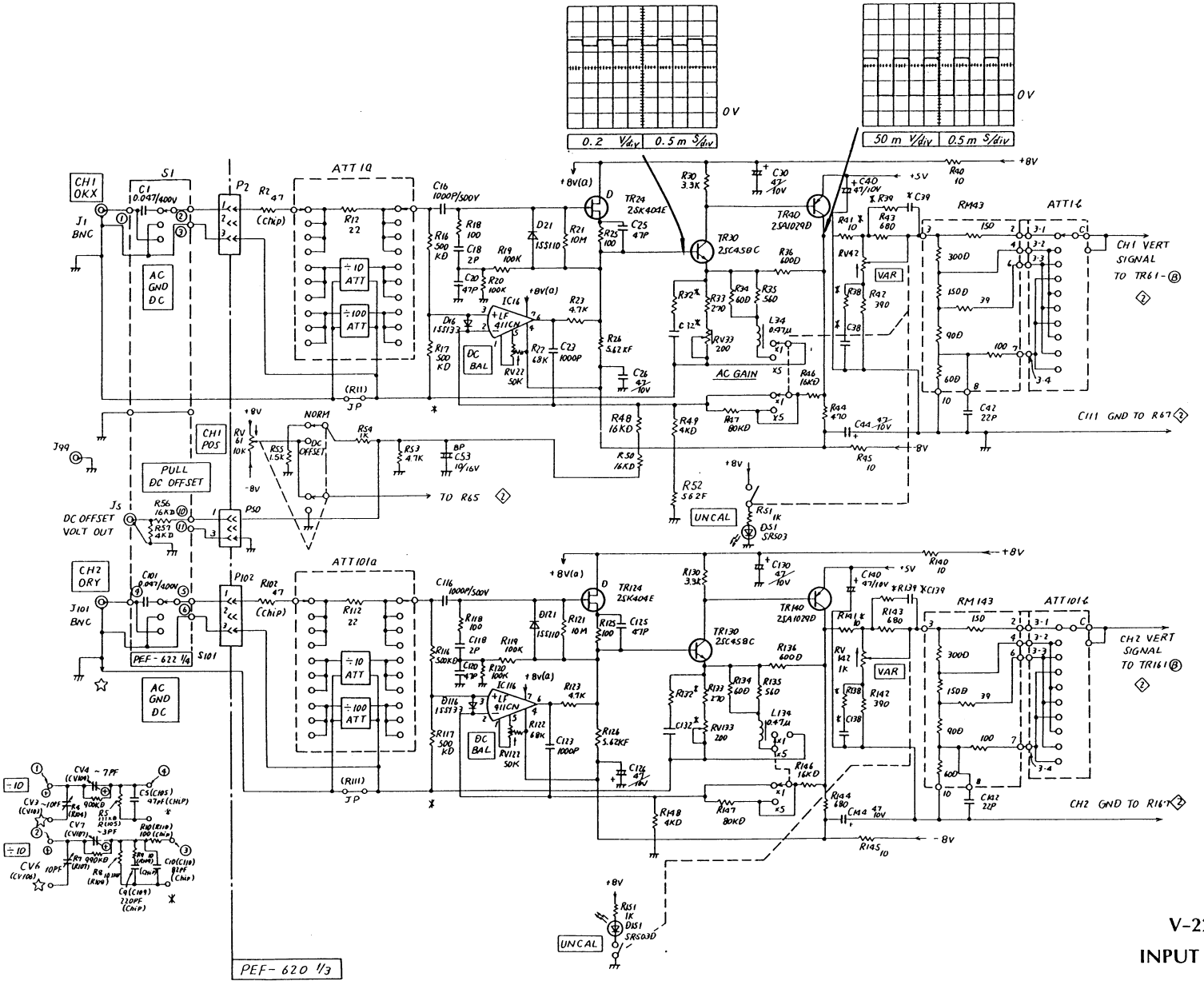

V-222

INPUT AMP ①

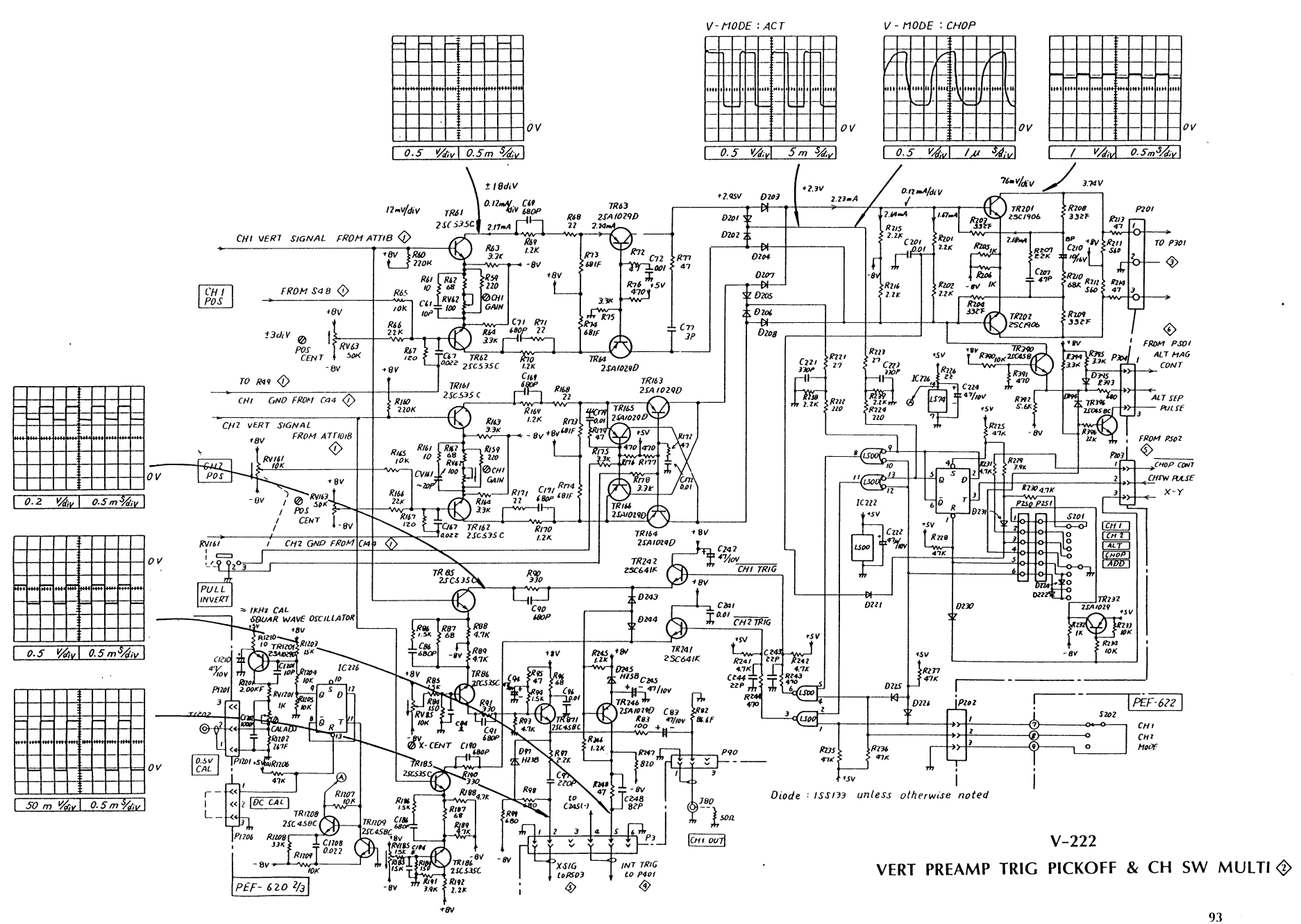

V-222

VERT PREAMP TRIG PICKOFF & CH SW MULTI ②

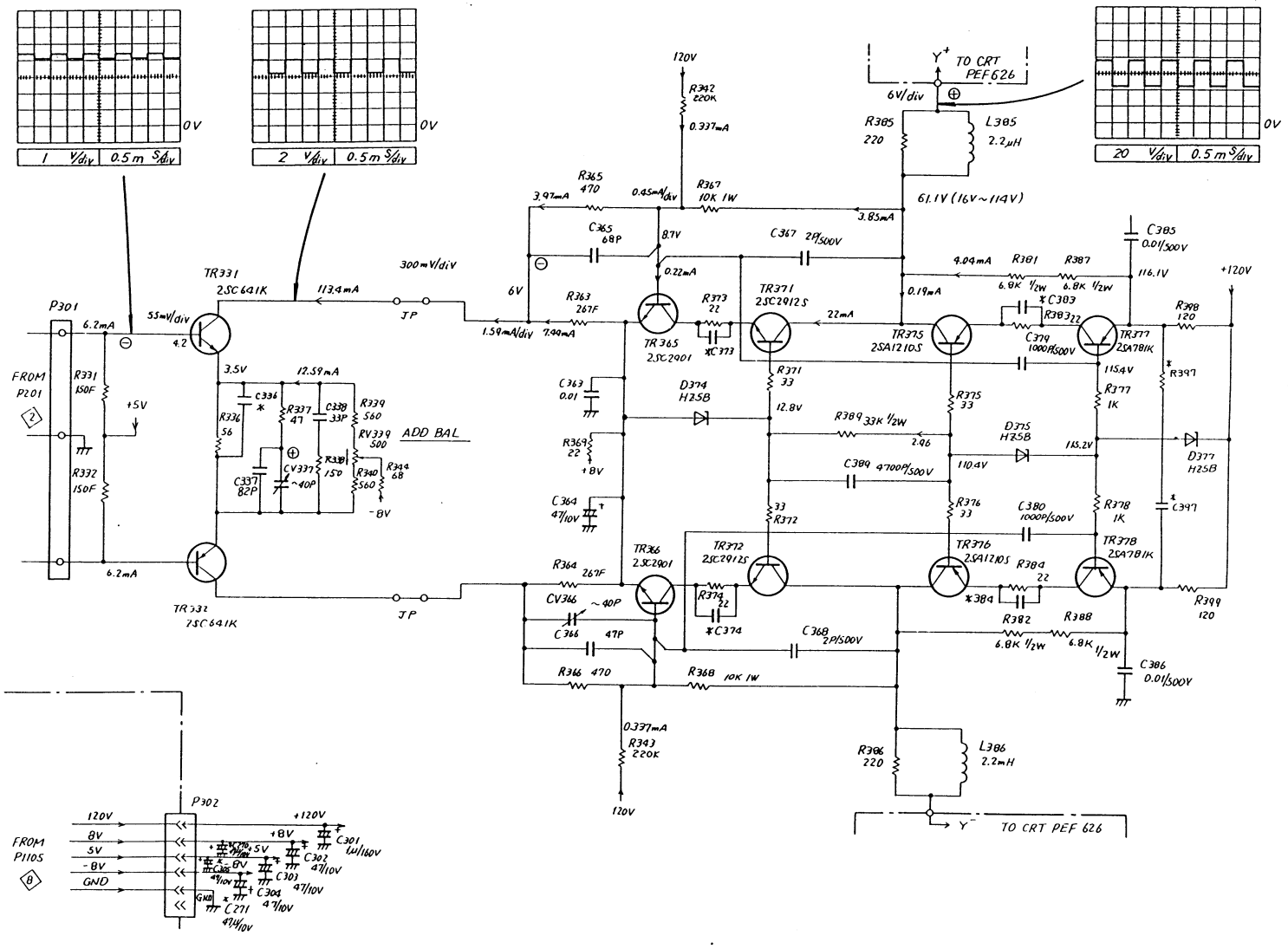
0V
1 V/div 0.5m S/div
0V
2 V/div 0.5m S/div
0V
20 V/div 0.5m S/div
TO CRT PEF626
6V/div
Y+
Y−
TO CRT PEF 626
120V
R342 220K
0.337mA
R365 470
R367 10K 1W
0.45mA/div
3.97mA
3.85mA
61.1V (16V~114V)
R305 220
L305 2.2μH
C365 68P
8.7V
C367 2P/500V
0.22mA
300mV/div
TR331 2SC641K
113.4mA
JP
6V
R363 267F
R373 22
TR371 2SC2912S
22mA
TR375 2SA1210S
4.04mA
R381 6.8K 1/2W
R387 6.8K 1/2W
C385 0.01/500V
116.1V
+120V
0.19mA
*C383
R383 22
R398 120
P301
6.2mA
55mV/div
4.2
1.59mA/div
7.94mA
TR365 2SC2901
*C373
C379 1000P/500V
TR377 2SA781K
FROM P201
R331 150F
+5V
3.5V
12.59mA
C336 *
R337 47
C338 33P
R339 560
RV339 500
ADD BAL
R336 56
C337 82P
CV337 ~40P
R338 150
R340 560
R334 68
-8V
C363 0.01
D374 H25B
R371 33
12.8V
R375 33
115.4V
R377 1K
*R397
R389 33K 1/2W
2.46
D375 H25B
115.2V
D377 H25B
R369 22
+8V
C389 4700P/500V
110.4V
C364 47/10V
33
R372
R376 33
C380 1000P/500V
R378 1K
*C397
R332 150F
6.2mA
TR332 2SC641K
TR366 2SC2901
TR372 2SC2912S
TR376 2SA1210S
R384 22
TR378 2SA781K
R364 267F
CV366 ~40P
R374 22
*C374
*384
R399 120
JP
C366 47P
C368 2P/500V
R382 6.8K 1/2W
R388 6.8K 1/2W
C386 0.01/500V
R366 470
R368 10K 1W
0.337mA
R343 220K
120V
R306 220
L306 2.2mH
P302
FROM P110S
120V
8V
5V
-8V
GND
+120V
+8V
5V
-8V
GND
C301 1μ/160V
C302 47/10V
C303 47/10V
C304 47/10V
C271 47μ/10V

V-222

V OUT ③

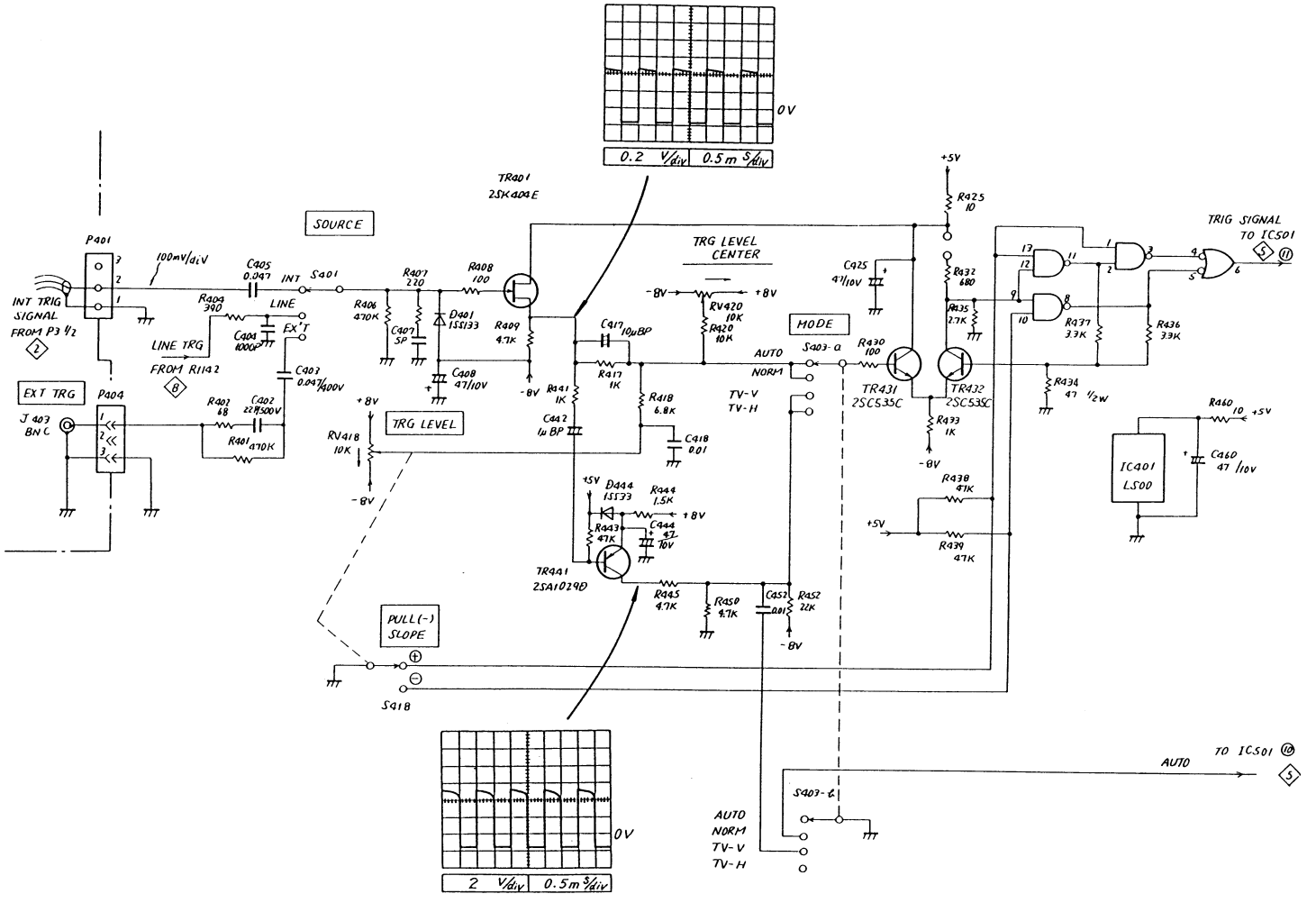

V-222

TRIG GEN 4

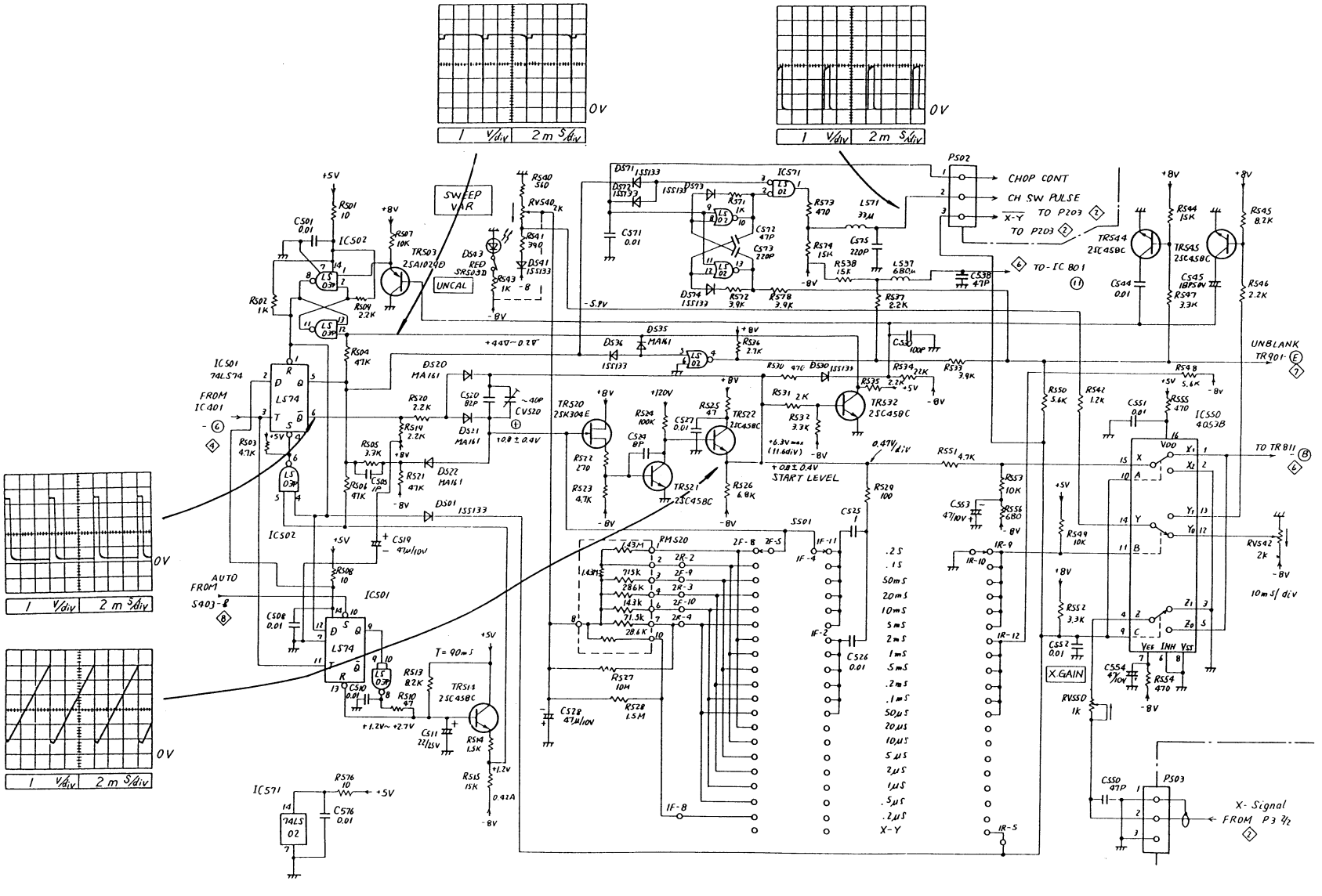

PEF-621 2/5

V-222

SWEEP GEN ③

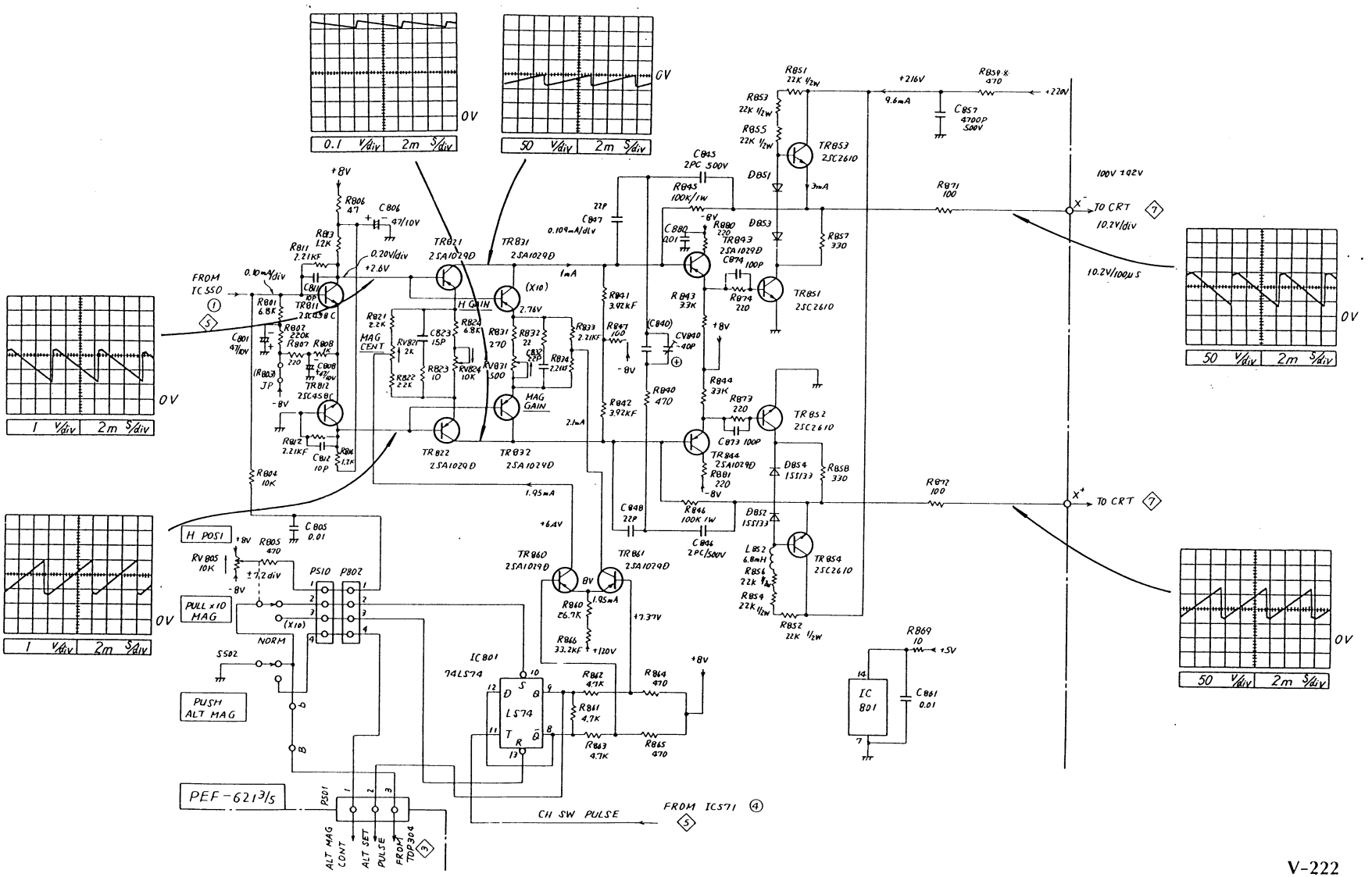
0.1 V/div 2m S/div
50 V/div 2m S/div
1 V/div 2m S/div
1 V/div 2m S/div
50 V/div 2m S/div
50 V/div 2m S/div
FROM IC550
TO CRT
TO CRT
H POS1
PULL x10 MAG
PUSH ALT MAG
PEF-6213/5
CH SW PULSE
FROM IC571
ALT MAG CONT
ALT SET PULSE
FROM TDP304
H GAIN
MAG CENT
MAG GAIN
IC801 74LS74
IC 801
+216V
+220V
100V ±02V
10.2V/div
10.2V/100μs

V-222

H AMP

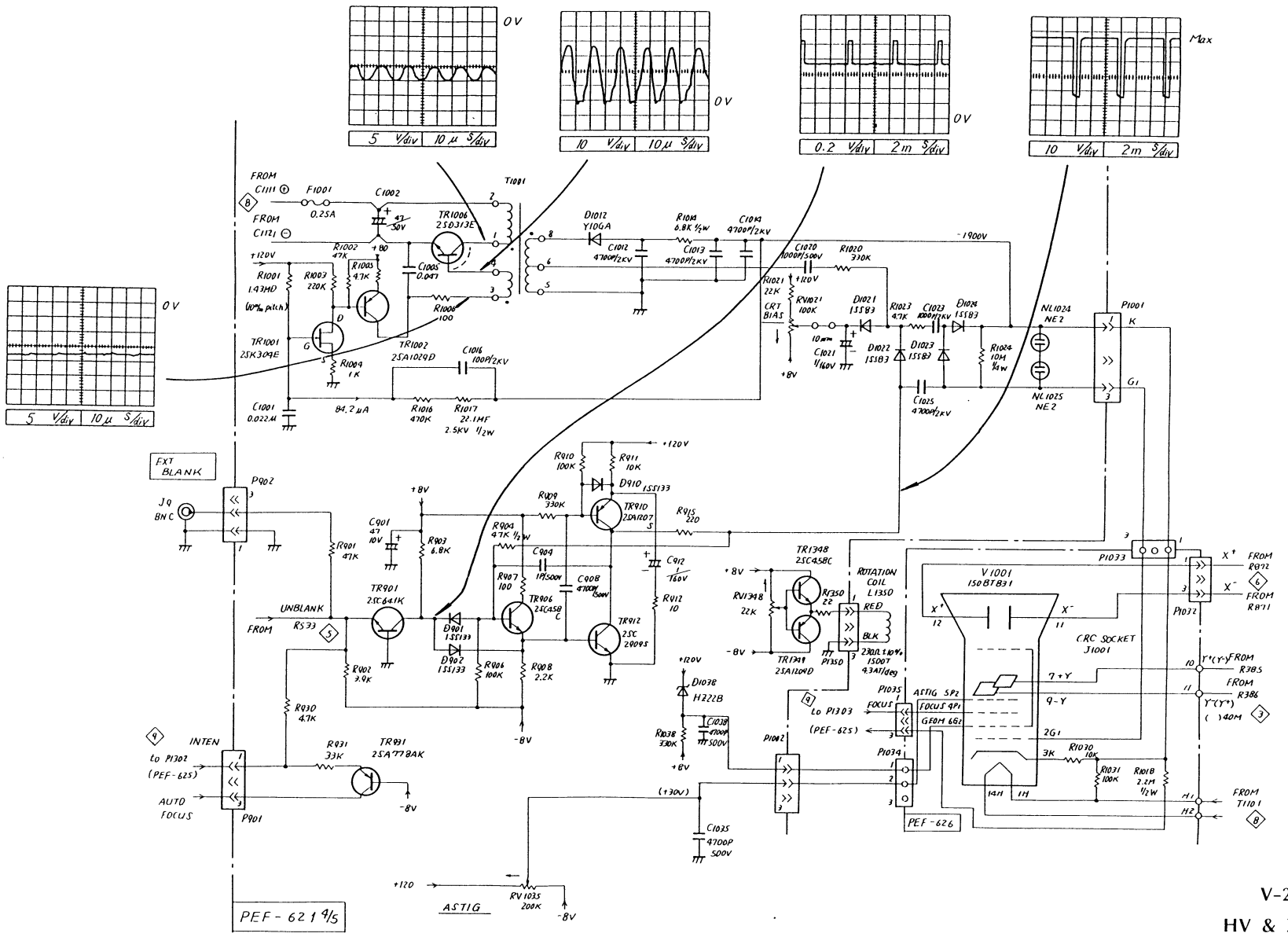

V-222

HV & Z AMP 7

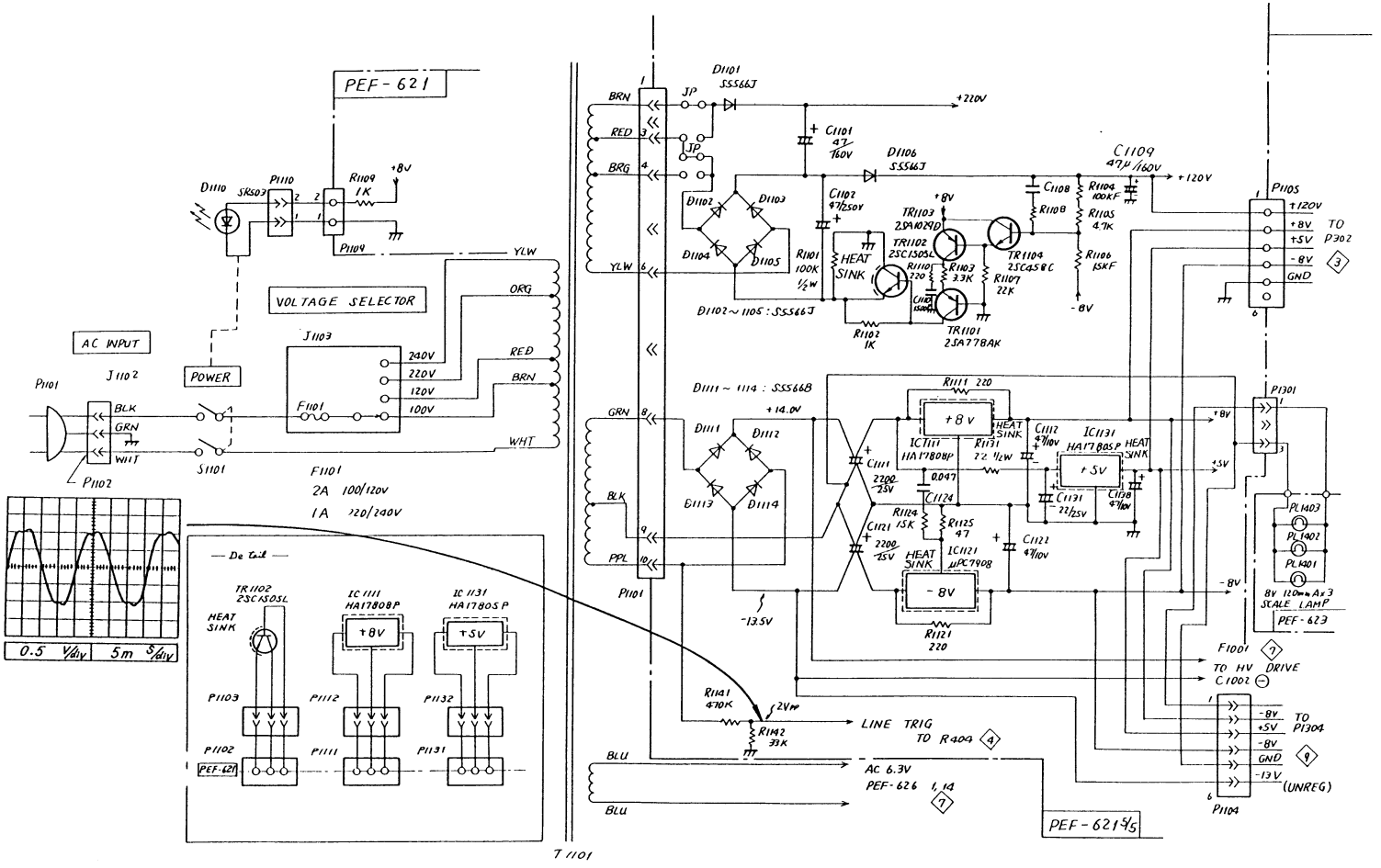

V-222

POWER SUPPLY ⑧

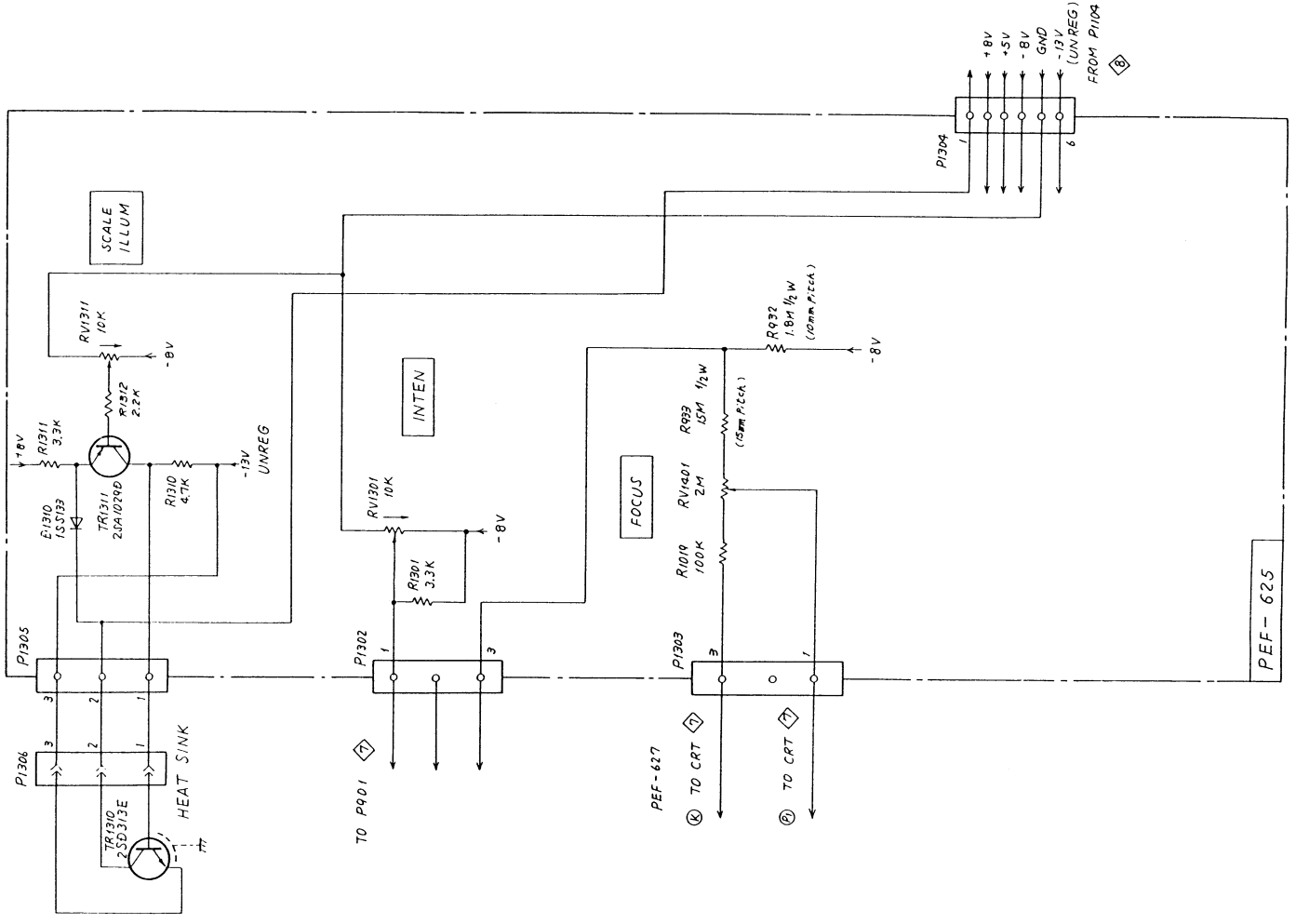

V-222

RV/LAMP 9

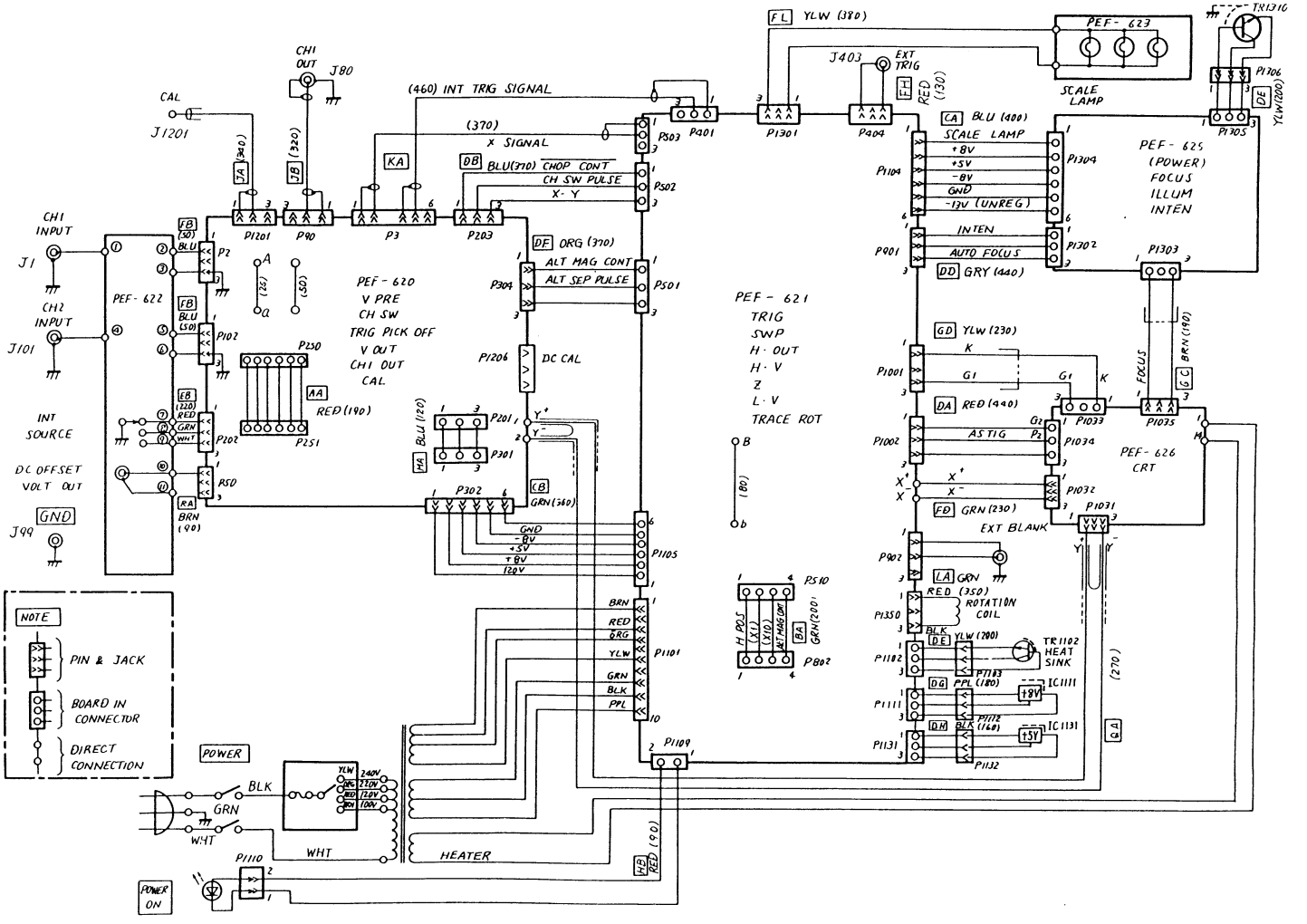

V-222
WIRING DIAGRAM

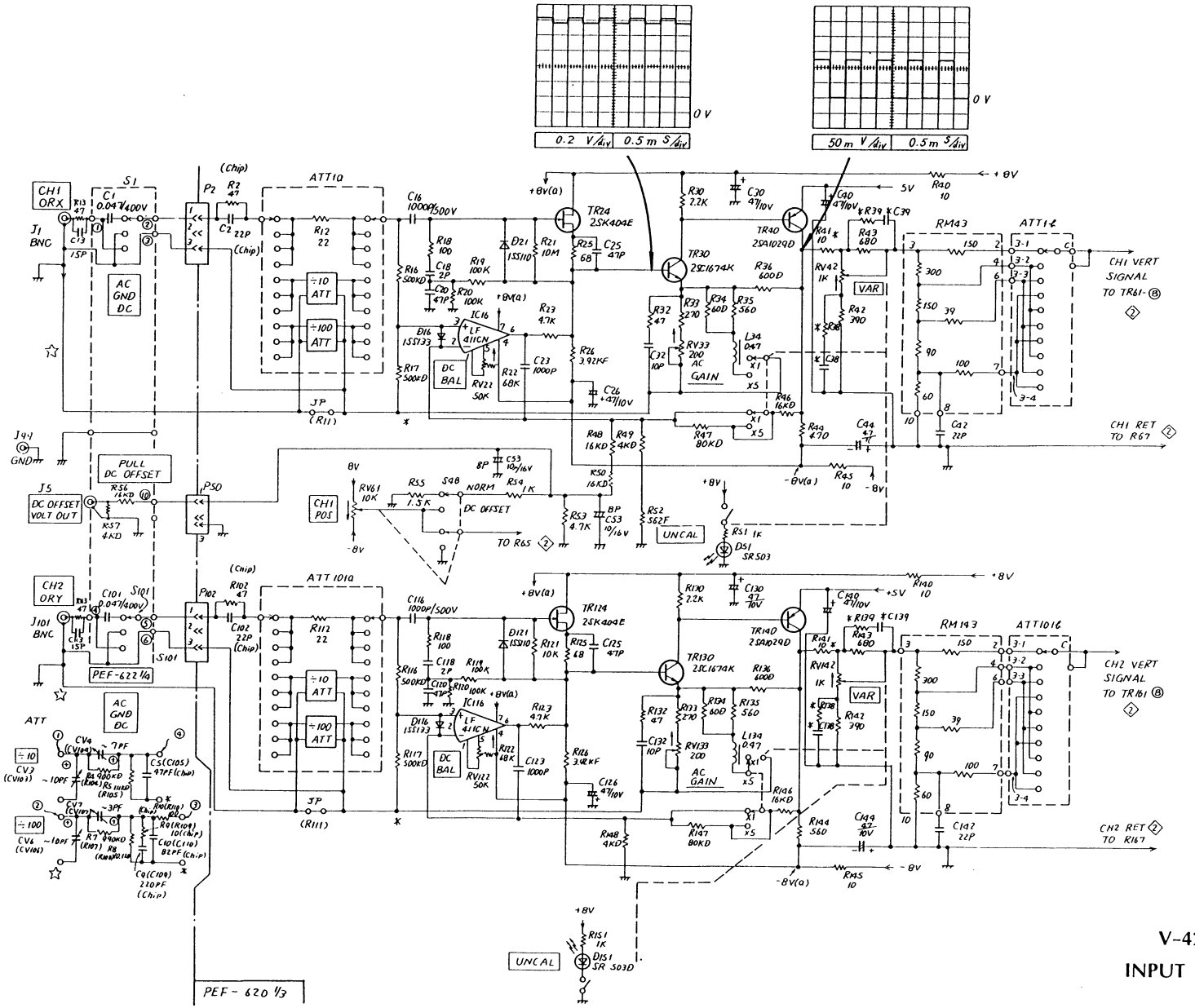

V-422

INPUT AMP ①

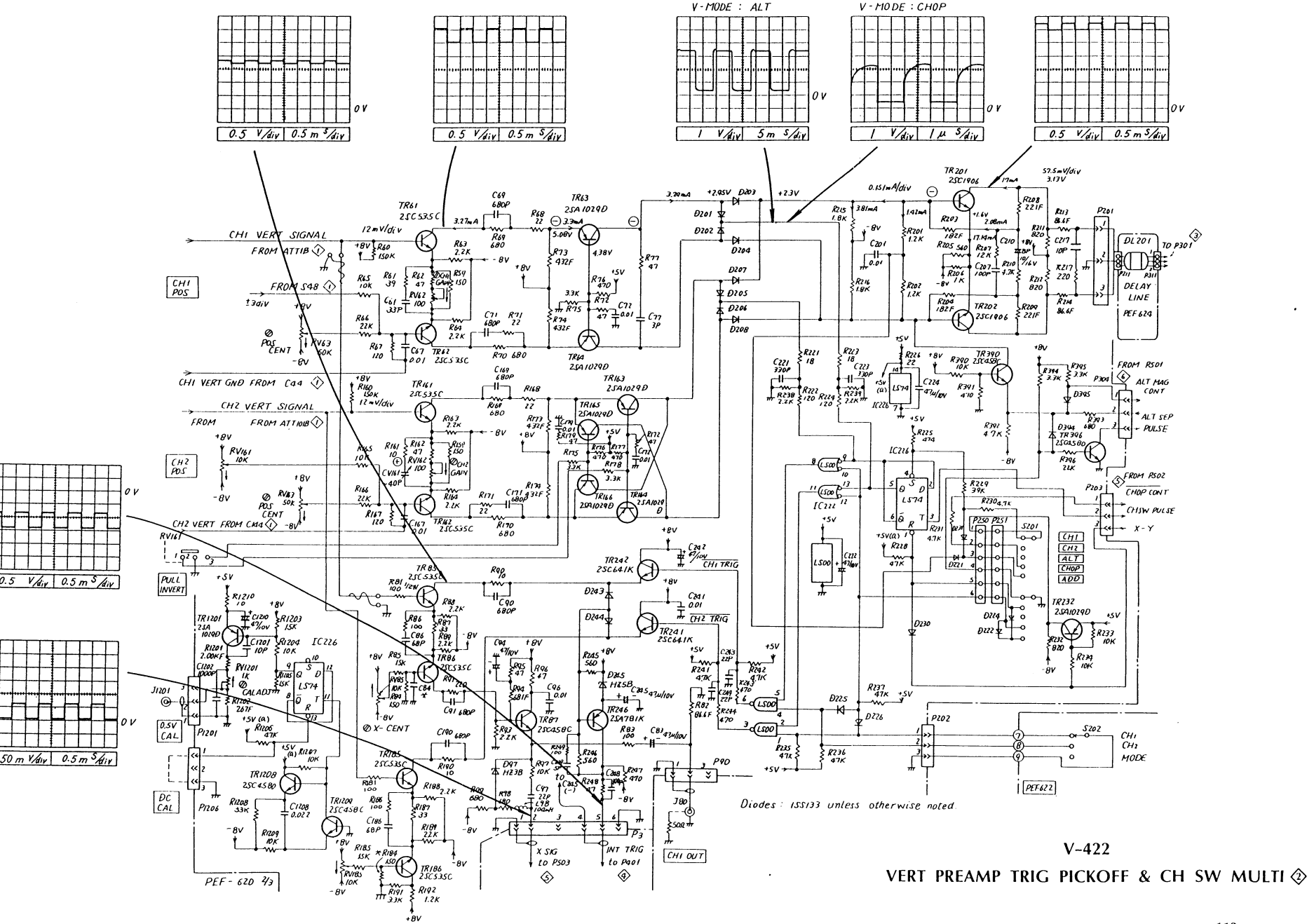

V-422

VERT PREAMP TRIG PICKOFF & CH SW MULTI ②

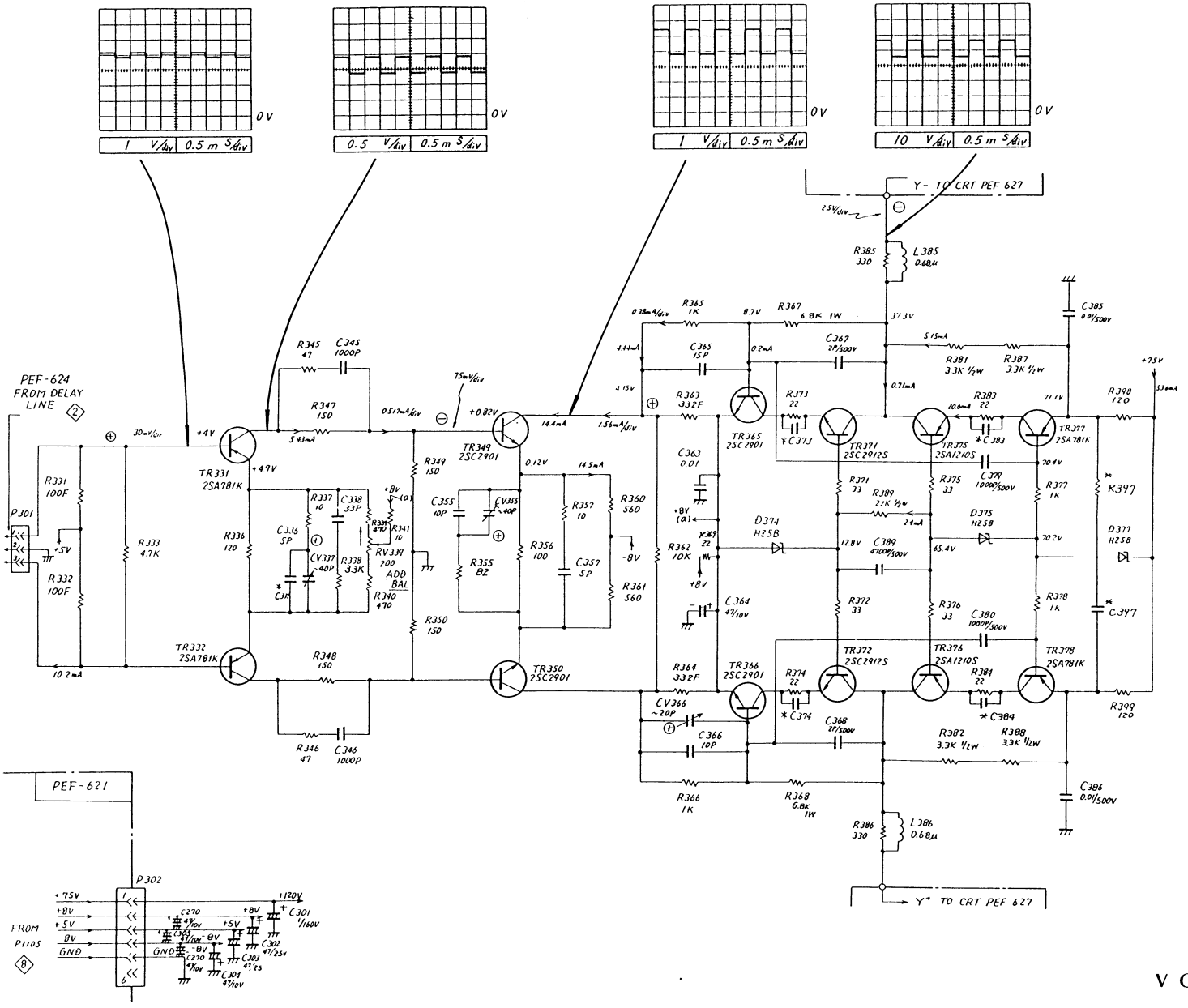

V-422

V OUT AMP ③

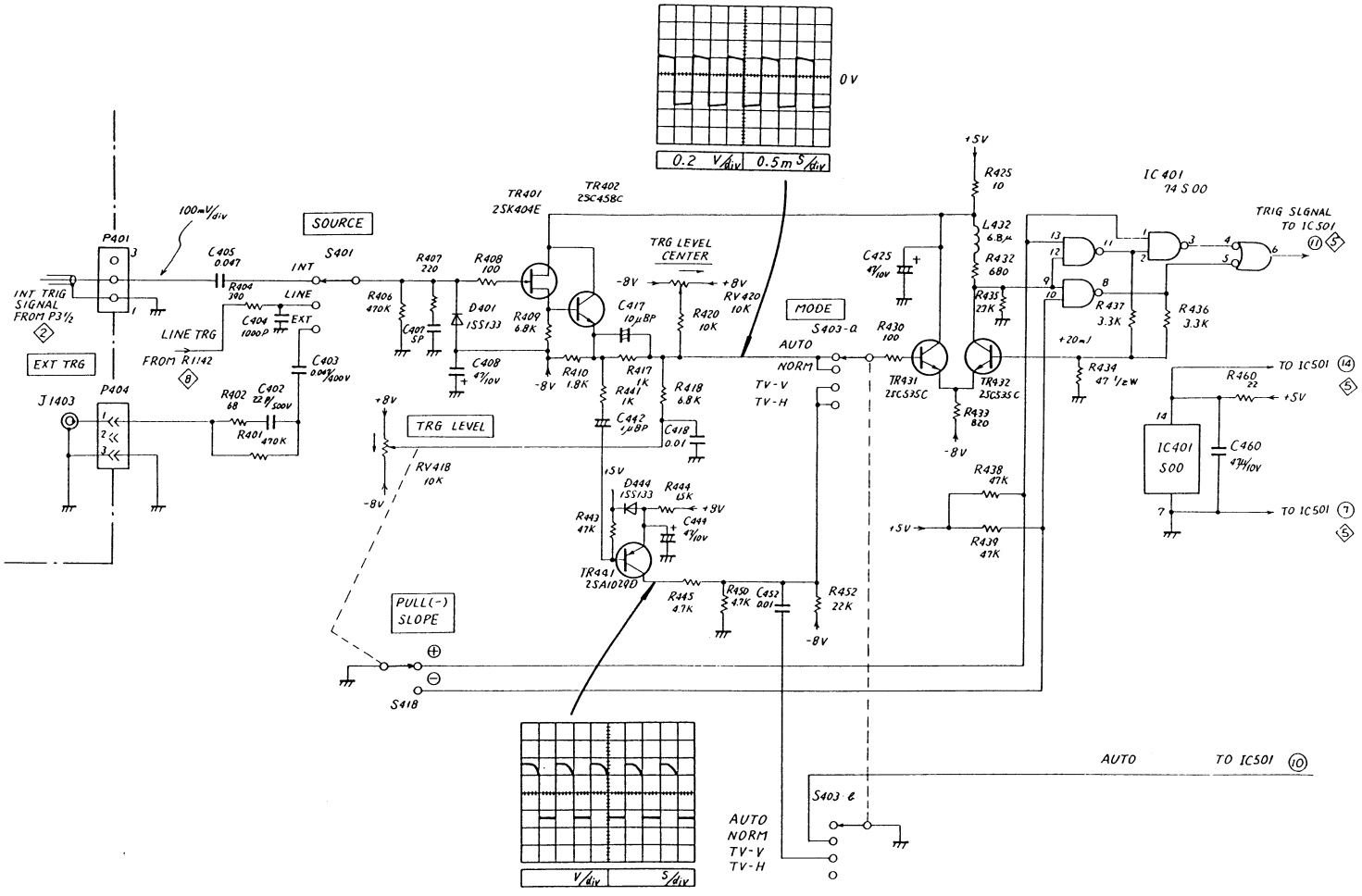

V-422

TRIG GEN ④

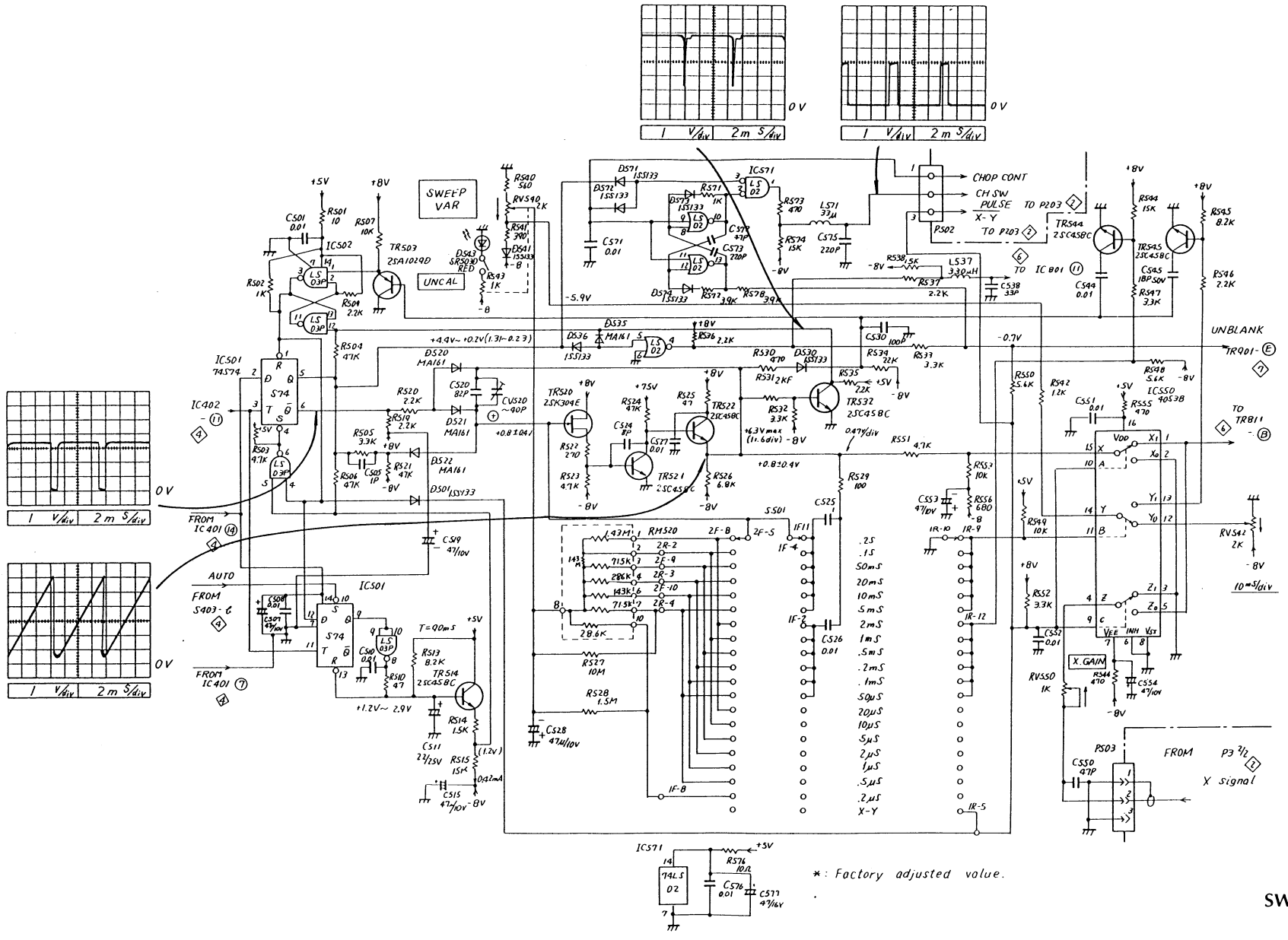

* : Factory adjusted value.

V-422

SWEEP GEN ⑤

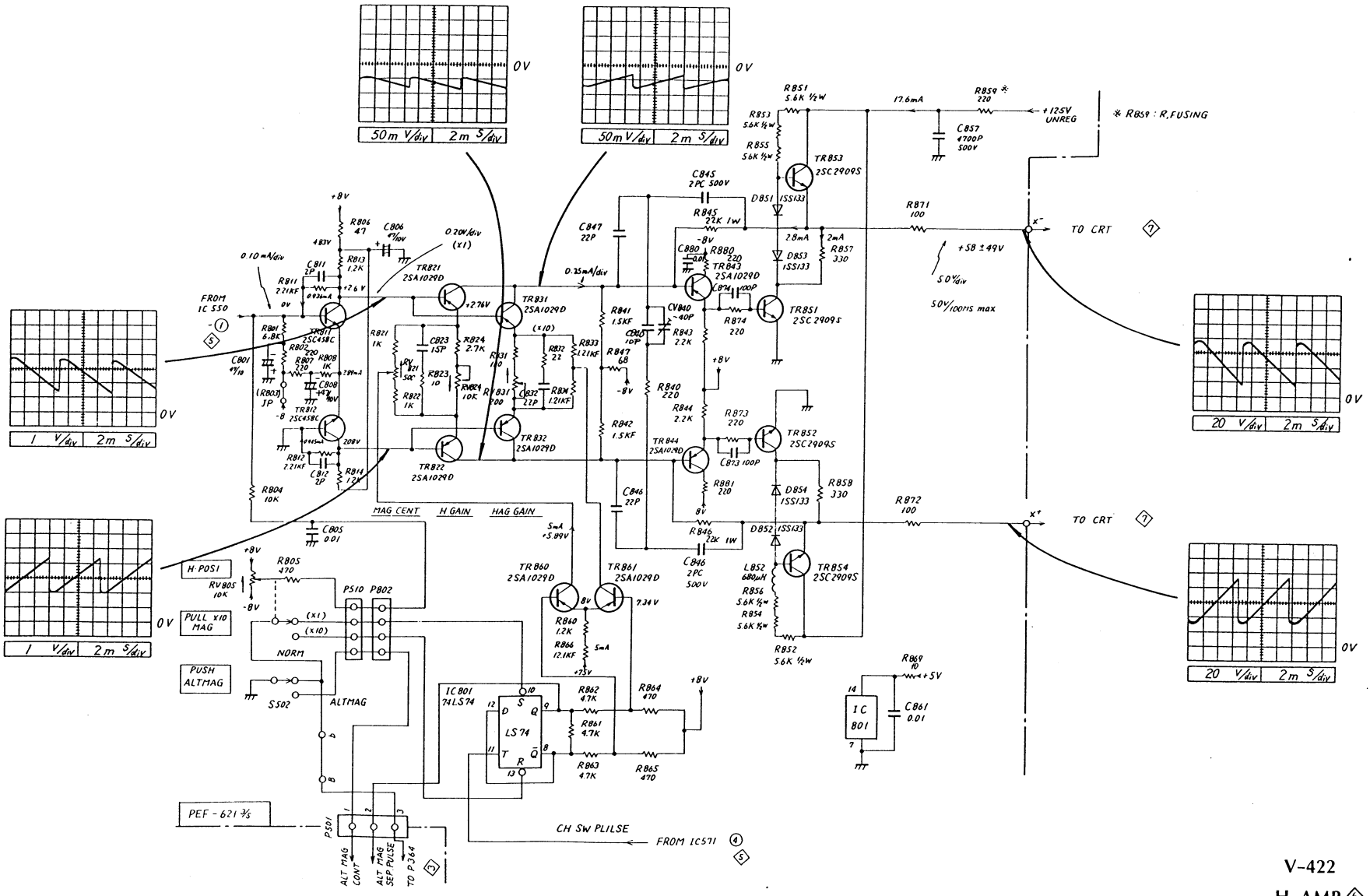
50m V/div 2m S/div
0V
50m V/div 2m S/div
0V
1 V/div 2m S/div
0V
1 V/div 2m S/div
0V
20 V/div 2m S/div
0V
20 V/div 2m S/div
0V
FROM IC 550
TO CRT
TO CRT
+125V UNREG
※ R859 : R.FUSING
MAG CENT
H GAIN
HAG GAIN
H POSI
PULL x10 MAG
PUSH ALTMAG
NORM
ALTMAG
S502
PS10 P802
IC 801 74LS74
LS 74
IC 801
PEF - 621 3/5
PS01
ALT MAG CONT
ALT MAG SEP.PULSE
TO P364
CH SW PLILSE
FROM IC571
0.10mA/div
0.20V/div (x1)
0.25mA/div
+58 ±49V
50V/div
50V/100μs max

V-422

H AMP 6

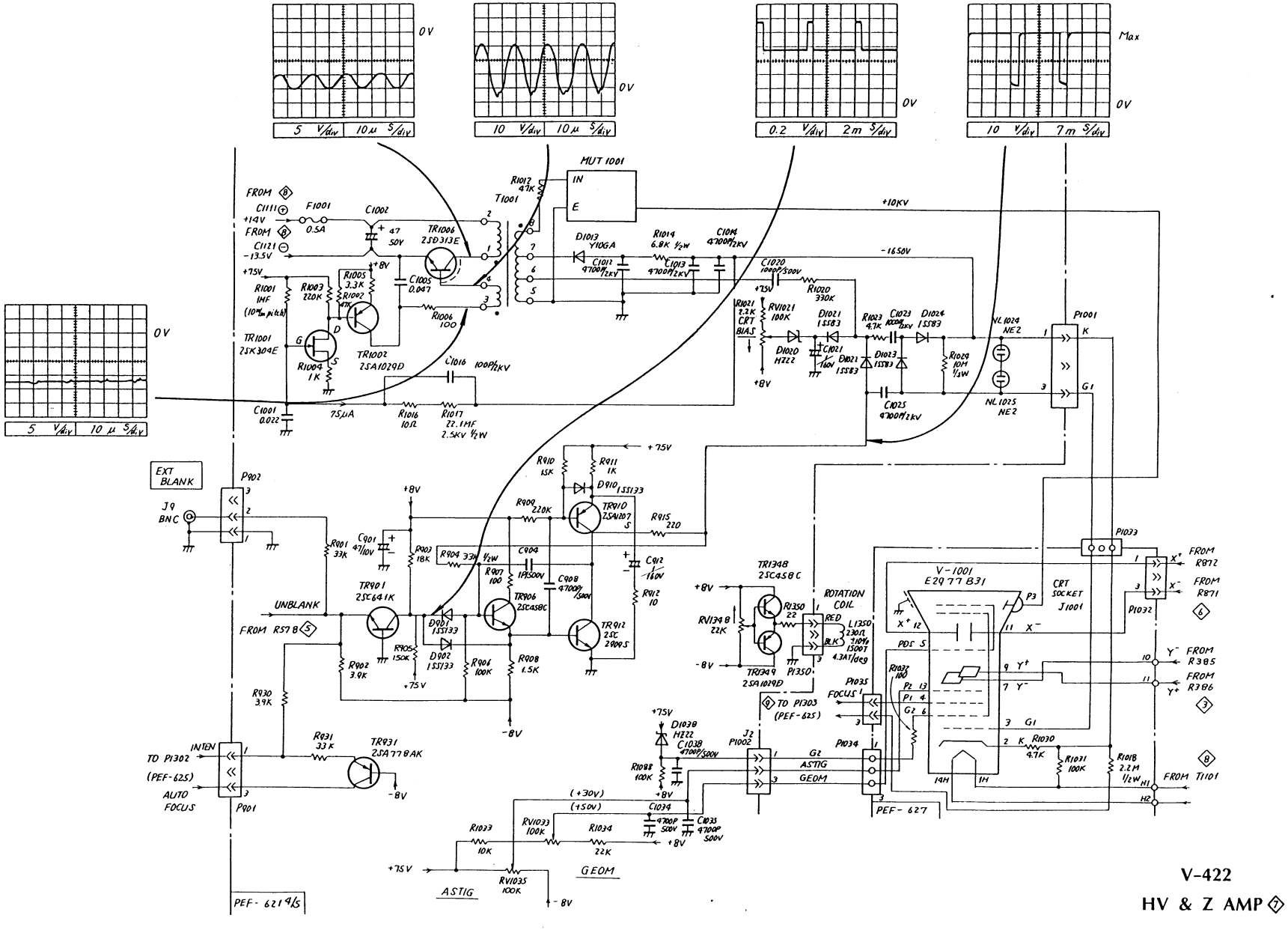

V-422

HV & Z AMP 7

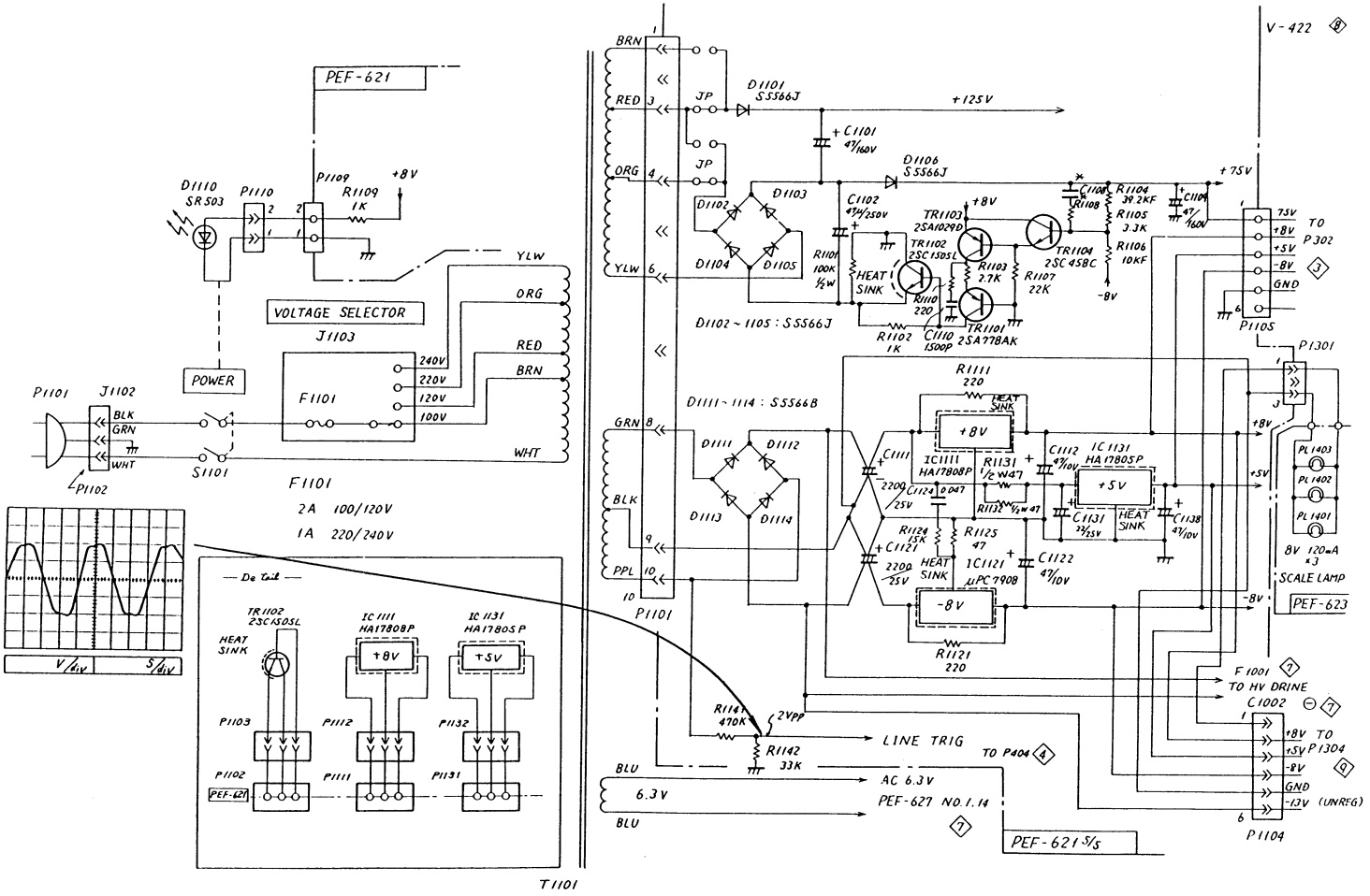

V-422

POWER SUPPLY

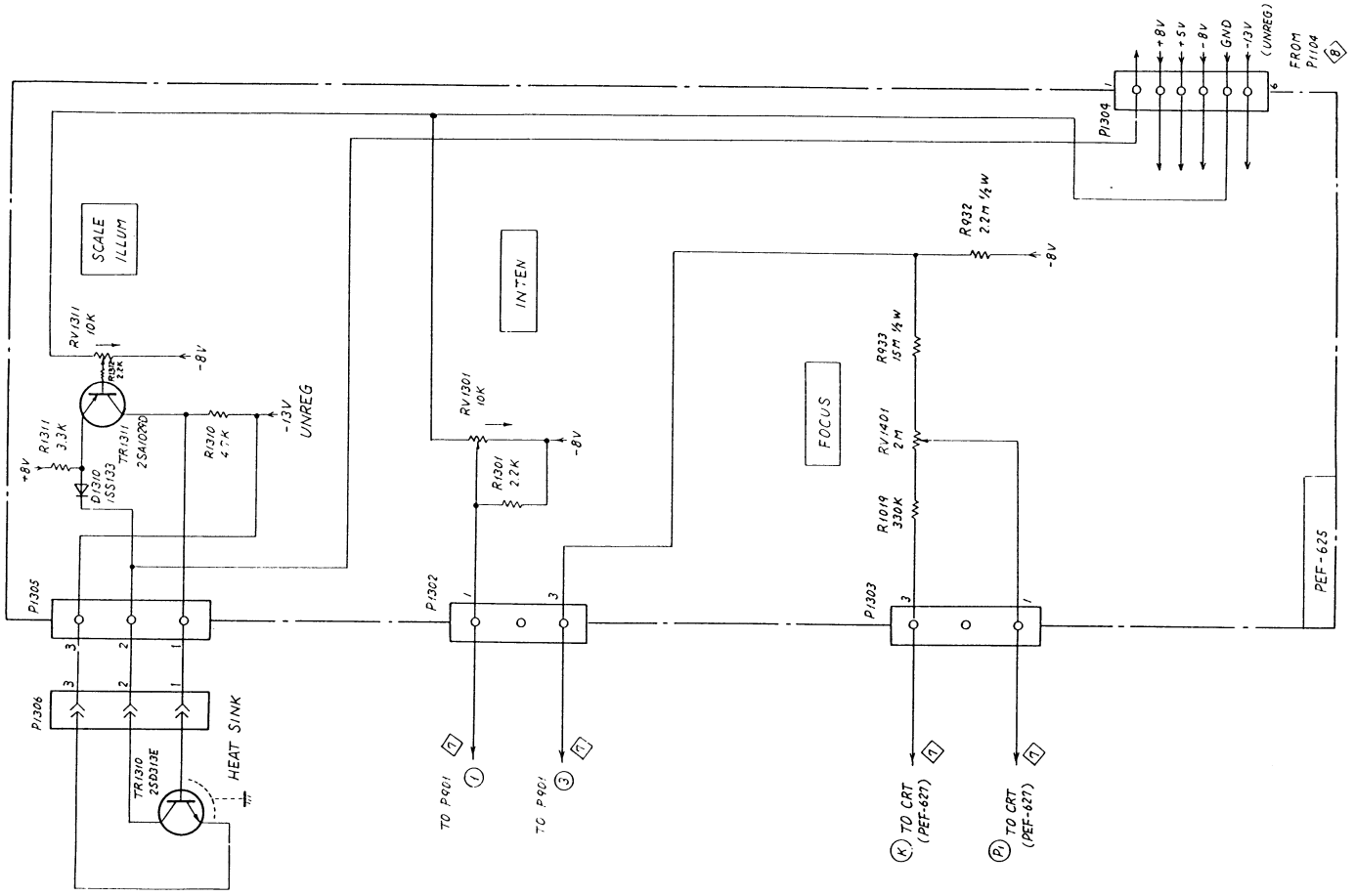
SCALE ILLUM
INTEN
FOCUS
PEF-625
P1304
+8V
+5V
-8V
GND
-13V
(UNREG)
FROM P1104
R932 2.2M 1/4W
-8V
R933 15M 1/4W
RV1401 2M
R1019 330K
RV1301 10K
R1301 2.2K
-8V
RV1311 10K
R312 22K
-8V
R1311 3.3K
+8V
D1310 1SS133
TR1311 2SA1020
R1310 4.7K
-13V UNREG
P1305
P1306
TR1310 2SD313E
HEAT SINK
P1302
TO P901
TO P901
P1303
TO CRT (PEF-627)
TO CRT (PEF-627)

V-422

RV/LAMP

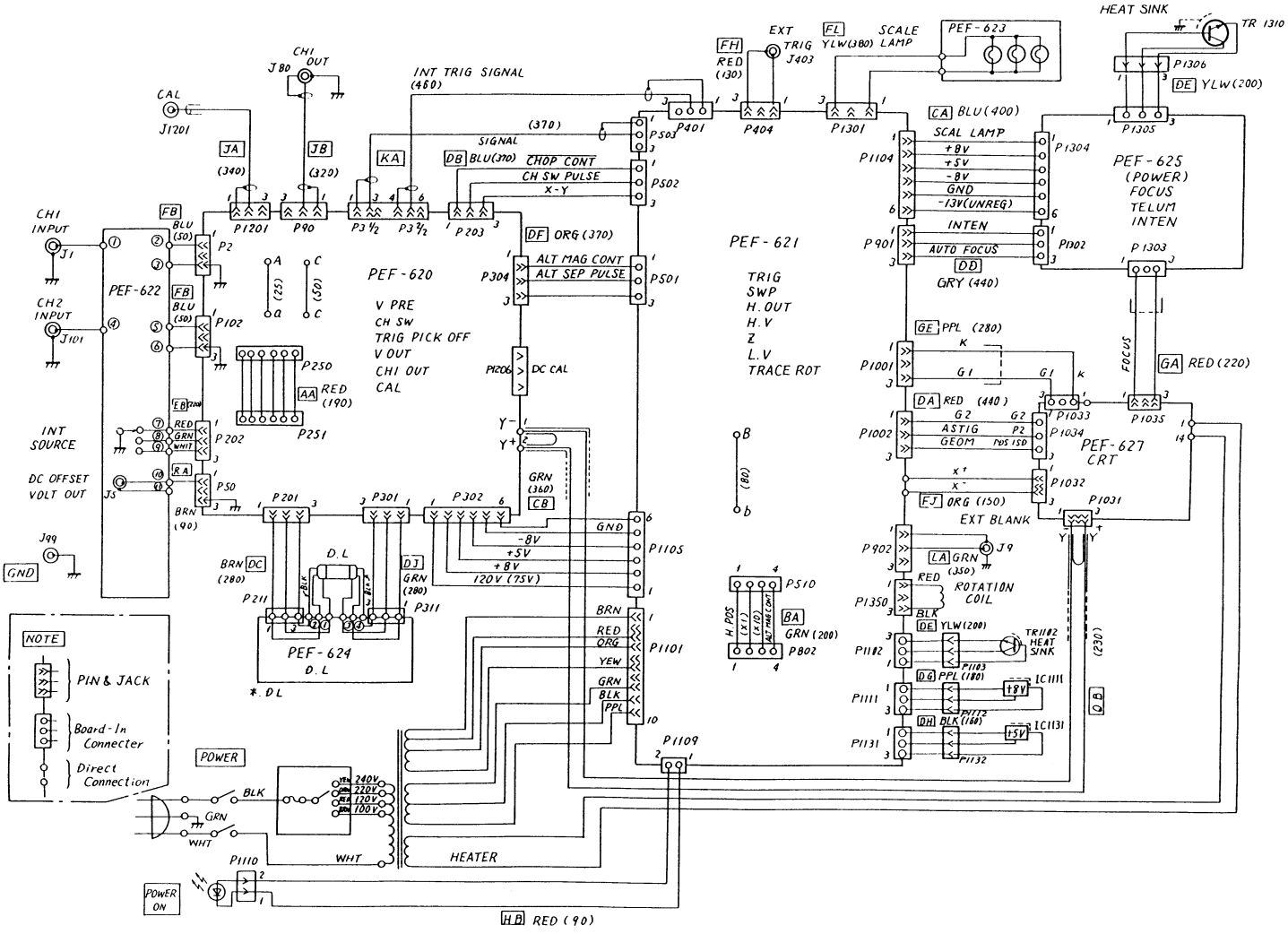

V-422

WIRING DIAGRAM

Part Code	Symbol		Description	Qty V-211	Qty V-212
8403435A	G	1	COVER ASSY	1	1
3177955A		1	COVER	1	1
3177957A		2	COVER BOTTOM	1	1
2105416A		3	CHASSIS FRONT	1	1
2105417AA		4	CHASSIS REAR	1	1
2105418AA		5	CHASSIS C	1	1
2105419AA		6	CHASSIS P	1	1
3177958AA		7	CHASSIS L	1	1
3177959A		8	BRACKET	1	1
3177960A		9	BRACKET	1	1
8398471A		10	BRACKET	1	1
8398472A		11	BRACKET CRT	1	1
8398473A		12	BRACKET CRT	1	1
8398474A		13	CRT BAND	1	1
8398475A		14	CRT BAND	1	1
8398476A		15	NUT PLATE	2	2
8398477A		16	SPACER BNC	2	2
8399593A		18	PLATE	1	1
3180079A		19	SHIELD CASE HV	1	1
8400305A		20	SHIELD COVER HV	1	1
8405457-59A		22	HEAT SINK	2	2
8405460A		23	HEAT SINK	1	1
3179394A		51	PANEL FRONT	1	-
3179392A		51	PANEL FRONT	-	1
3179396A		52	PANEL REAR	1	1
8399592A		53	NAME PLATE	1	-
8399592B		53	NAME PLATE	-	1
121381A		54	FRONT MASK	1	1
2105423A		55	BEZEL	1	1
8395445A		56	FILTER	1	1
4053616A		57	HANDLE	1	1
8398478A		58	STAND	1	1
3175129A		59	STAND STOPPER	1	1
				1	1
3149317A		63	FOOT	4	4
3140755A		64	FOOT	4	4
8396865A		65	FOOT	4	4
8395432A		66	SHIELD BAND	1	1
8396867A		67	RUBBER PLATE	1	1
3144055A		68	RUBBER	2	2
8395443A		69	RUBBER	1	1
8395444A		70	RUBBER	1	1
8395444B		71	RUBBER	1	1
8396868A		72	SPACER	1	3
8396868B		73	SPACER	2	2
3180083AA		75	KNOB-PW	1	1
3180084AA		76	KNOB-L	2	2
3140804B		77	KNOB-S22	1	1
3149321B		78	KNOB-S18	-	1
3149324C		79	KNOB-S18B	2	3
3149324D		80	KNOB-S18B	3	4
3122681C		81	KNOB-0016	1	2
8393786A		83	LABEL	1	1
8401613A		84	INSULATOR	1	1
8401614A		85	INSULATOR	1	1
8401625A		86	PLATE INSULATOR	1	1
8383455B		87	SADDLE	6	6
XCA0661		301	SCREW SEMS 3 x 8	10	10
8340167C		302	SCREW SEMS 4 x 20	4	4
XCA6005		304	SCREW 2.6 x 5	2	1
XCA6306		305	SCREW 3 x 6	2	6
XCA6308		306	SCREW x 8	32	32
XCA6316		307	SCREW 3 x 16	2	2

Part Code	Symbol		Description	Qty V-211	Qty V-212
XCA6412	G	308	SCREW 4 x 12	4	4
XCA1820		310	SCREW 3 x 10	2	2
XCA7306		312	SCREW FLAT 3 x 6	19	19

V-222/V-422

Part Code	Symbol	Description	Qty V-422	Qty V-222
3177956A	1	COVER	1	1
3177957A	2	COVER BOTTOM	1	1
2105416A	3	CHASSIS FRONT	1	1
2105417AA	4	CHASSIS REAR	1	1
2105418AA	5	CHASSIS C	1	1
2105419AA	6	CHASSIS P	1	1
3177958AA	7	CHASSIS L	1	1
3177959A	8	BRACKET	1	1
3177960A	9	BRACKET	1	1
8398471A	10	BRACKET	1	1
8398472A	11	BRACKET CRT	1	1
8398473A	12	BRACKET CRT	1	1
8398474A	13	CRT BAND	1	1
8398475A	14	CRT BAND	1	1
8398476A	15	NUT PLATE	2	2
8398477A	16	SPACER BNC	3	3
8398479A	17	EARTH SPRING	1	-
3180079A	19	SHIELD CASE HV	1	1
8400305A	20	SHIELD COVER HV	1	1
8405457-59A	22	HEAT SINK	2	2
8405460A	23	HEAT SINK	1	1
3179392C	51	PANEL FRONT	1	-
3179392B	51	PANEL FRONT	-	1
3179396A	52	PANEL REAR	1	1
8399592D	53	NAME PLATE	1	-
8399592C	53	NAME PLATE	-	1
121381A	54	FRONT MASK	1	1
2105423A	55	BEZEL	1	1
8395445A	56	FILTER	1	1
3177922A	61	HANDLE	1	1
8377076A	62	HANDLE STOPPER	1	1
3149317A	63	FOOT	4	4
3140755A	64	FOOT	4	4
8395432B	66	SHIELD BAND	1	-
8395432A	66	SHIELD BAND	-	1
8396867B	67	RUBBER PLATE	1	-
8396967A	67	RUBBER PLATE	-	1
3144055A	68	RUBBER	2	2
8395443A	69	RUBBER	1	1
8395444A	70	RUBBER	1	1
8395444B	71	RUBBER	1	1
8396868A	72	SPACER	3	3
8396868B	73	SPACER	2	2
8395431A	74	PLATE LAMP GUIDE	1	1
3180083AA	75	KNOB-PW	1	1
3180084AA	76	KNOB-L	3	3
3140804B	77	KNOB-S22	1	1
3149321B	78	KNOB-S18	1	1
3149324C	79	KNOB-S18B	3	3
3149324D	80	KNOB-S18B	4	4
3122681C	81	KNOB-0016	2	2
8383451A	82	KNOB-SW	1	1
8393786A	83	LABEL	1	1
8401613A	84	INSULATOR	1	1
8401614A	85	INSULATOR	1	1
8401625A	86	PLATE INSULATOR	1	1
8383455B	87	SADDLE	7	6
4124935C	88	CLIP	2	-
XCA0661	301	SCREW SEMS 3 x 8	10	10
8340167C	302	SCREW SEMS 4 x 20	4	4
XCA6005	304	SCREW 2.6 x 5	1	1
XCA6306	305	SCREW 3 x 6	6	6
XCA6308	306	SCREW 3 x 8	28	28

Part Code	Symbol	Description	Qty V-422	Qty V-222
XCA6316	307	SCREW 3 x 16	6	6
XCA6412	308	SCREW 4 x 12	2	2
XCA1820	310	SCREW 3 x 10	2	2
XCA7306	312	SCREW FLAT 3 x 6	19	19
XCA7410	313	SCREW FLAT 4 x 10	4	4
XCA0251	314	SCREW PAN 3 x 8 PLASTIC	2	2

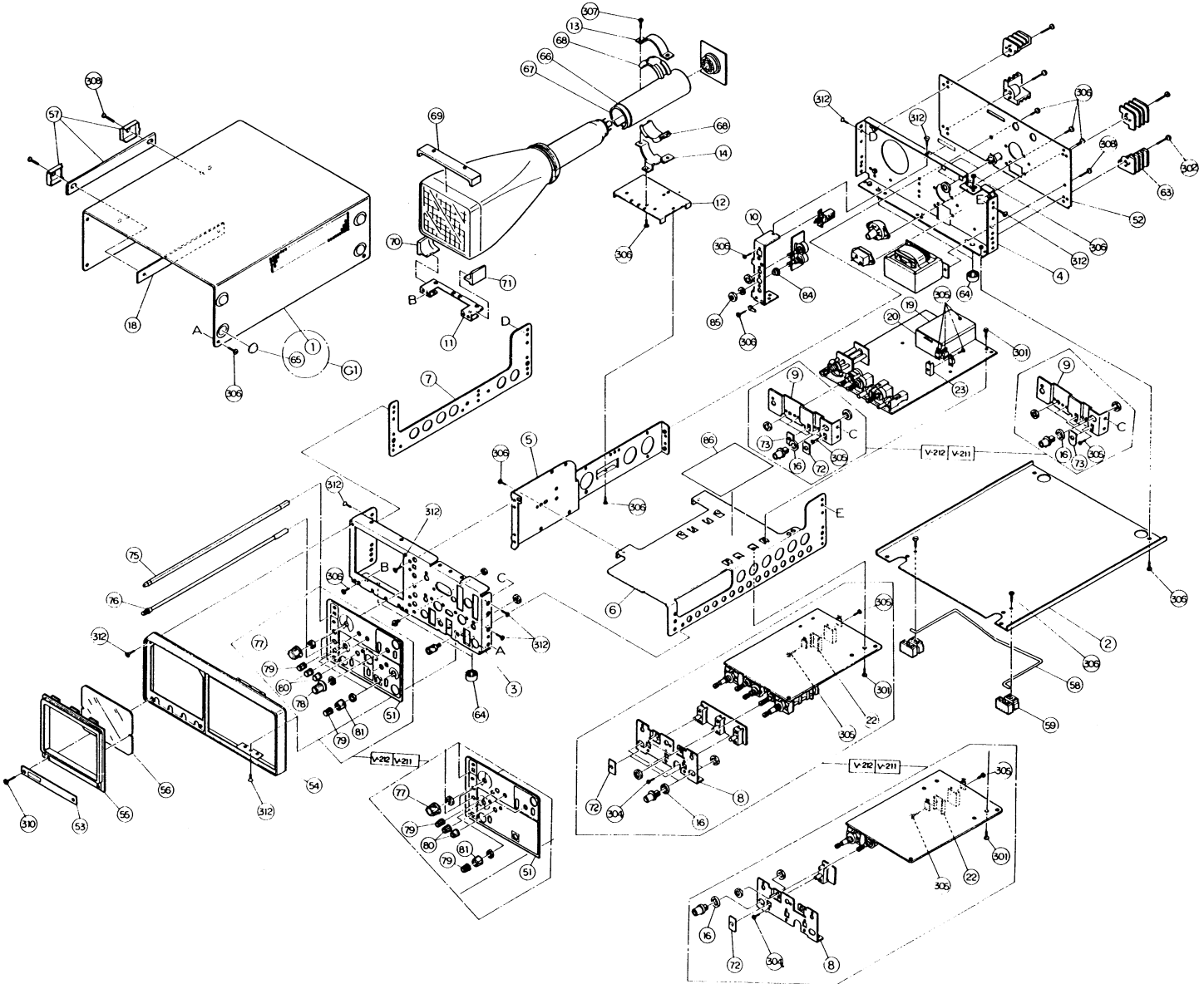

V-211/V-212
EXPLODED VIEW

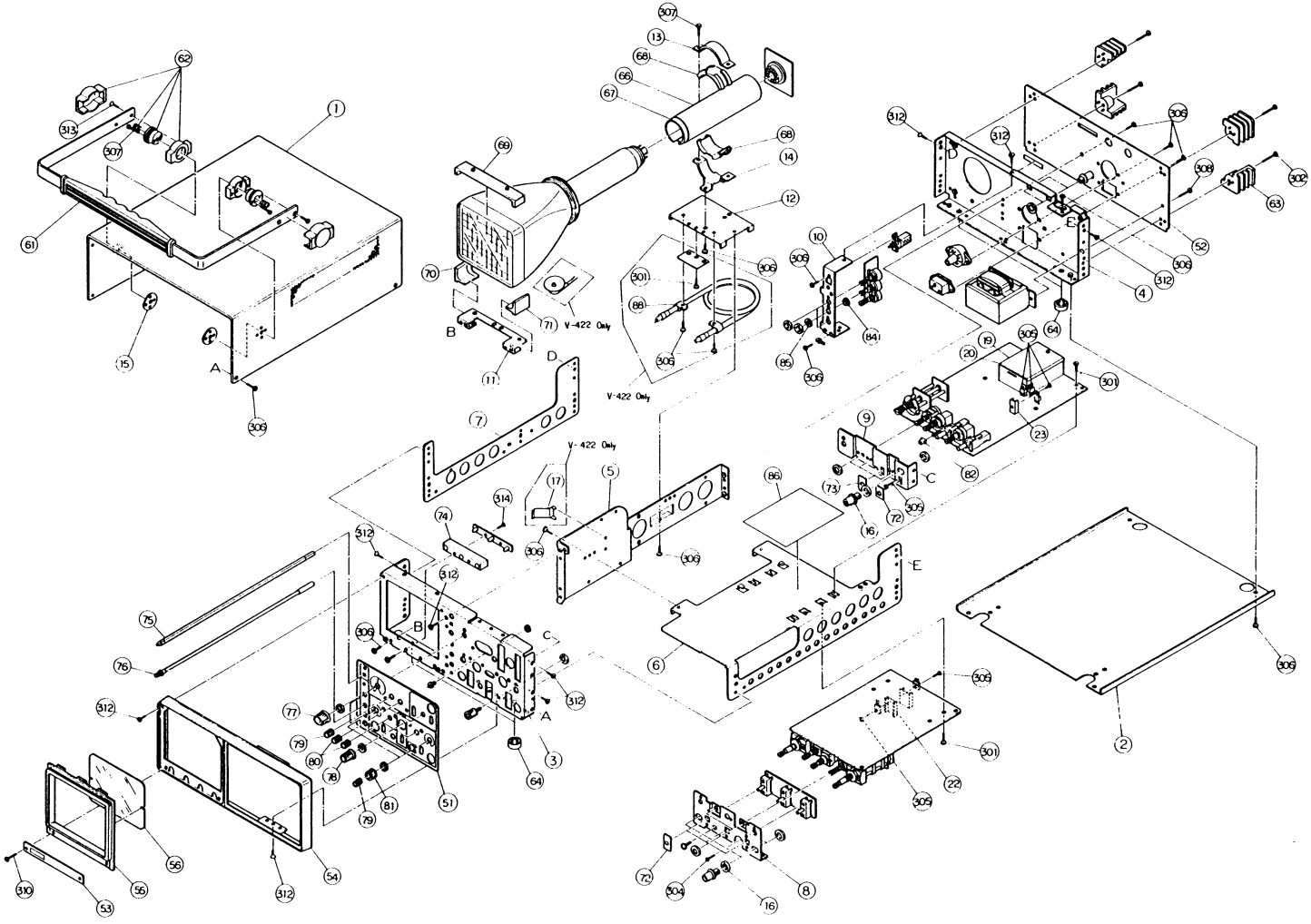

V-222/V-422
EXPLODED VIEW