# AKAI

# SERVICE MANUAL

**Model:**

**LCT3701AD**


1. Safety Instructions ····· 1~2
2. Production Specification ····· 4~15
3. Circuit Diagram ····· 16~40
4. Main IC Information ····· 41
5. Panel Information····· 42~68
6. Explored View ····· 69
7. Spare Part List····· 70~72
8. V-Chip Password····· 73
9. Software Upgrade ····· 74~81



This manual is the latest at the time of printing, and does not include the modification which may be made after the printing, by the constant improvement of product.

# I. Safety Instructions

CAUTION

**RISK OF ELECTRIC SHOCK DO NOT OPEN**

**CAUTION: TO REDUCE THE RISK OF ELECTRIC SHOCK, DO NOT REMOVE COVER (OR BACK). NO USER-SERVICEABLE PARTS INSIDE. REFER SERVICING TO QUALIFIED SERVICE PERSONNEL ONLY.**

The lightning flash with arrowhead symbol, within an equilateral triangle, is intended to alert the user to the presence of uninsulated " dangerous voltage" within the product' s enclosure that may be of sufficient magnitude to constitute a risk of electric shock to persons.

The exclamation point within an equilateral triangle is intended to alert the user to the presence of important operating and maintenance (servicing) instructions in the literature accompanying the appliance.

**PRECAUTIONS DURING SERVICING**

1. In addition to safety, other parts and assemblies are specified for conformance with such regulations as those applying to spurious radiation. These must also be replaced only with specified replacements. Examples: RF converters, tuner units, antenna selection switches, RF cables, noise-blocking capacitors, noise-blocking filters, etc.
2. Use specified internal Wiring. Note especially:
   1) Wires covered with PVC tubing
   2) Double insulated wires
   3) High voltage leads
3. Use specified insulating materials for hazardous live parts. Note especially:
   1) Insulating Tape
   2) PVC tubing
   3) Spacers (insulating barriers)
   4) Insulating sheets for transistors
   5) Plastic screws for fixing micro switches
4. When replacing AC primary side components (transformers, power cords, noise blocking capacitors, etc.), wrap ends of wires securely about the terminals before soldering.

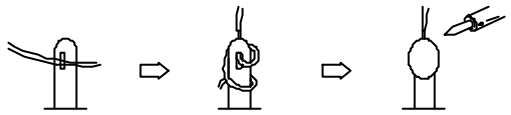

5. Make sure that wires do not contact heat generating parts (heat sinks, oxide metal film resistors, fusible resistors, etc.)
6. Check if replaced wires do not contact sharply edged or pointed parts.
7. Make sure that foreign objects (screws, solder droplets, etc.) do not remain inside the set.

**MAKE YOUR CONTRIBUTION TO PROTECT THE ENVIRONMENT**

Used batteries with the ISO symbol for recycling as well as small accumulators (rechargeable batteries), mini-batteries (cells) and starter batteries should not be thrown into the garbage can.

Please leave them at an appropriate depot.

**WARNING:**

Before servicing this TV receiver, read the X-RAY RADIATION PRECAUTION, SAFETY INSTRUCTION and PRODUCT SAFETY NOTICE.

**X-RAY RADIATION PRECAUTION**

1. Excessively high can produce potentially hazardous X-RAY RADIATION. To avoid such hazards, the high voltage must not exceed the specified limit. The normal value of the high voltage of this TV receiver is 27 KV at zero bean current (minimum brightness). The high voltage must not exceed 30 KV under any circumstances. Each time when a receiver requires servicing, the high voltage should be checked. The reading of the high voltage is recommended to be recorded as a part of the service record, It is important to use an accurate and reliable high voltage meter.
2. The only source of X-RAY RADIATION in this TV receiver is the picture tube. For continued X-RAY RADIATION protection, the replacement tube must be exactly the same type as specified in the parts list.
3. Some parts in this TV receiver have special safety related characteristics for X-RADIATION protection. For continued safety, the parts replacement should be under taken only after referring the PRODUCT SAFETY NOTICE.

**SAFETY INSTRUCTION**

The service should not be attempted by anyone unfamiliar with the necessary instructions on this TV receiver. The following are the necessary instructions to be observed before servicing.

1. An isolation transformer should be connected in the power line between the receiver and the AC line when a service is performed on the primary of the converter transformer of the set.
2. Comply with all caution and safety related provided on the back of the cabinet, inside the cabinet, on the chassis or picture tube.
3. To avoid a shock hazard, always discharge the picture tube's anode to the chassis ground before removing the anode cap.

4. Completely discharge the high potential voltage of the picture tube before handling. The picture tube is a vacuum and if broken, the glass will explode.
5. When replacing a MAIN PCB in the cabinet, always be certain that all protective are installed properly such as control knobs, adjustment covers or shields, barriers, isolation resistor networks etc.
6. When servicing is required, observe the original lead dressing. Extra precaution should be given to assure correct lead dressing in the high voltage area.
7. Keep wires away from high voltage or high tempera ture components.
8. Before returning the set to the customer, always perform an AC leakage current check on the exposed metallic parts of the cabinet, such as antennas, terminals, screwheads, metal overlay, control shafts, etc., to be sure the set is safe to operate without danger of electrical shock. Plug the AC line cord directly to the AC outlet (do not use a line isolation transformer during this check). Use an AC voltmeter having 5K ohms volt sensitivity or more in the following manner.
   Connect a 1.5K ohm 10 watt resistor paralleled by a 0.15µF AC type capacitor, between a good earth ground (water pipe, conductor etc.,) and the exposed metallic parts, one at a time.
   Measure the AC voltage across the combination of the 1.5K ohm resistor and 0.15 uF capacitor. Reverse the AC plug at the AC outlet and repeat the AC voltage measurements for each exposed metallic part.
   The measured voltage must not exceed 0.3V RMS. This corresponds to 0.5mA AC. Any value exceeding this limit constitutes a potential shock hazard and must be corrected immediately.
   The resistance measurement should be done between accessible exposed metal parts and power cord plug prongs with the power switch "ON". The resistance should be more than 6M ohms.

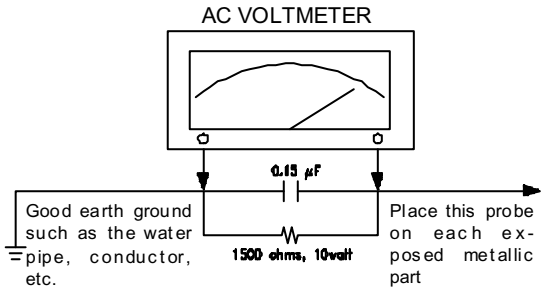

AC Leakage Current Check

**PRODUCT SAFETY NOTICE**

Many electrical and mechanical parts in this TV receiver have special safety-related characteristics. These characteristics are offer passed unnoticed by visual spection and the protection afforded by them cannot necessarily be obtained by using replacement components rates for a higher voltage, wattage, etc. The replacement parts which have these special safety characteristics are identified by ⚠ marks on the schematic diagram and on the parts list. Before replacing any of these components, read the parts list in this manual carefully. The use of substitute replacement parts which do not have the same safety characteristics as specified in the parts list may create shock, fire, X-RAY RADIATION or other hazards.

**Reference No : LCT3701AD**

# Product Specification

| | |
|---|---|
| 1.1 VIDEO SECTION | CPT (CLAA370WAC02)<br>MK8202<br>USA |
| | |
| Display size | 37"/16:9 |
| Display Resolution | 1366 X 768 |
| Pixel Pitch | 600μm (H) x 600μm (V) |
| Peak Brightness | 550(nits) |
| Contract Ratio | 1000:1, Typical (1/100 White Window, Dark Room) |
| View Angle | Hor. And Vert. ≥170 degree |
| Color Deeps | 16.7M Color (R / G/ B each 256 Scales) |
| PC Resolution Supporting | VGA, SVGA, XGA,WXGA |
| HDTV Compatible | 480p /720p /1080i |
| Progressive Scanning | Yes |
| Film Mode Pull Down | Yes |
| "GAMMA" Correction | Yes |
| Color Temperature Control | Yes |
| Comb Filter | Yes |
| Second De-interlace for Sub picture | No |
| Wide Mode | Full, 4:3 and Panoramic. |
| TV System | NTSC M |
| Dual Tuner System | No |
| AV Input Color System | PAL /NTSC |
| PIP | Yes |
| 1.2 AUDIO SECTION | |
| Audio Output Power | 7W×2(8 ohm) |
| Sound Effect | Spatial Effect and Surround |
| Tone Control | Yes |
| 1.3 Input Terminals | D-Sub 15 Pin Type ( Analog-RGB Input ) ×1<br>HDMI (Ver 1.1) Connector x 1<br>D-Sub 9 Pin (RS-232)<br>RF ( F-type Input ) ×2 (ATV, DTV)<br>Component Video-YPbPr × 1 RCA Terminals<br>S-Video Input (Mini Din 4Pin) ×1<br>Video Input RCA Terminals<br>Stereo Audio Input x 4 |
| 1.4 Output Terminals | Audio Output (RCA ; L&R Type) ×1 |
| 1.5 Others | |
| Closed Caption / V-Chip | Yes |
| Teletext | No |
| OSD Language | English, Français, Español |

Reference No : LCT3701AD

| | |
|---|---|
| Stereo Decode | MTS with SAP |
| Power Rating | AC 120V, 60Hz |
| Power Consumption | ≤250W |

1.6 Support the Signal Mode
This machine can support the different from VGA signal mode in 6 kinds

| Resolution | Horizontal Frequency (kHz) | Vertical Frequency (kHz) |
|---|---|---|
| 640 x 480 | 31.50 | 60.00 |
| | 37.86 | 72.81 |
| 800 x 600 | 35.16 | 56.25 |
| | 37.90 | 60.32 |
| | 48.08 | 72.19 |
| 1024 x 768 | 48.40 | 60.00 |

1.7 HDTV Mode (YPbPr)

| Resolution | Horizontal Frequency (KHz) | Vertical Frequency (Hz) |
|---|---|---|
| 480i | 15.734 | 59.94 |
| 480p(720x480) | 31.468 | 59.94 |
| 720p(1280x720) | 45.00 | 60.00 |
| 1080i(1920x1080) | 33.75 | 60.00 |

# *KAWA ELECTRONIC RESEARCH & DEVELOPMENT CENTRE*

Reference No : LCT3701AD

Technical Data

| | | | |
|---|---|---|---|
| 1. Power supply | TV | AC 120V, 60Hz | |
| | Remote control | Battery 3V (UM-3/R6P/AAA×2) | |
| 2. TV system | TV System | NTSC M | ATSC |
| | Stereo Decode | MTS | MPEG-2 |
| | Closed Caption/V-Chip | Yes | Yes |
| | Channel | 181 CH | 2-69 CH |
| 3. Intermediate frequencies | Picture | 45.75MHz | |
| 4. Scanning | Horizontal (Hz) | 15625/15750 | |
| | Vertical (Hz) | 50/60 | |
| 5. AC plug | | UL Plug | |
| 6. Panel | | CLAA370WAC02 | |
| 7. Speaker | Internal | 8 ohm 10W ×2 | |
| 8. Operating temperature | Fulfill all specifications | 15°C ~ 30°C | |
| | Accept picture/sound reproduction | 5°C ~ 33°C | |
| 9. Operating relative humidity | Fulfill all specifications | 45% ~ 75% | |
| | Accept picture/sound reproduction | 20% ~ 80% | |
| 10. Electrical & optical specification | | See the attachment 1. | |
| 11. Circuit diagram drawing No. | | | |
| 12. Cabinet | | | |
| 13. Cabinet color | | | |
| 14. Packing | | 1 set per | |
| 15. Container stuffing method | | RD/05/P/LC26HAB/CSI/02 REV: 01 | |
| 16. Dimension (mm) (No packing) | LCD-TV | 925.8(W)×657.8(H)×113(D)mm (w/o Stand) | |
| | | 925.8(W) × 724.2 (H) × 267.5(D)mm (with Stand) | |
| | Remote control unit | 183(L) × 53(W) ×28(T)mm | |
| 17. Net weight | LCD-TV | 18.4Kg (with Stand) approx. | |
| | Remote control | 93g | |
| 18. Cell Defect | | Subject to Panel supplier specification | |
| | | | |
| | | | |
| | | | |

## Remote Control

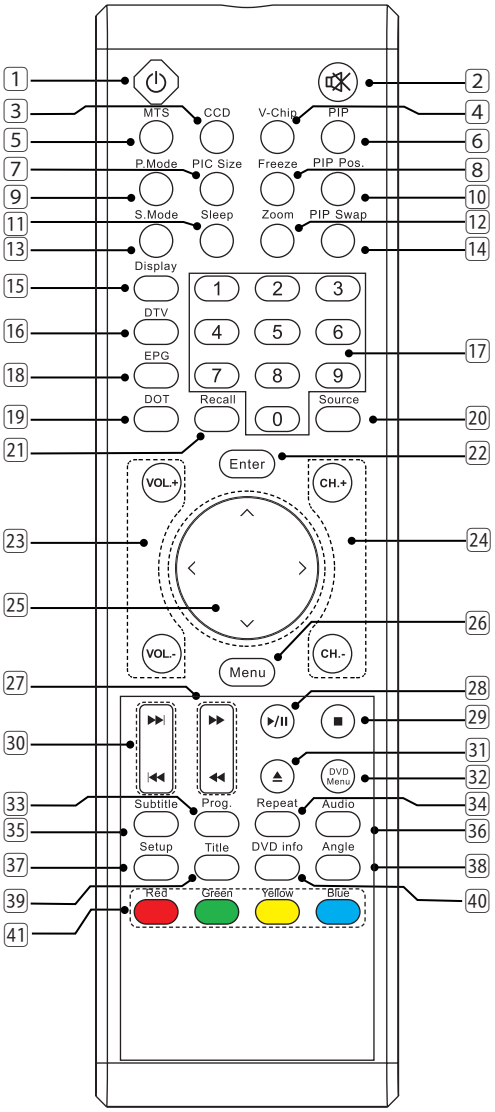


1. **Power** ( ⏻ ): Press to turn on and off.
2. **Mute** ( 🔇 ): Press to mute the sound. Press again or press VOL+/- to restore the sound.
3. **CCD**: Press to select the Closed Caption mode.
4. **V-Chip**: Press to select the child protect mode.
5. **MTS**: Press repeatedly to cycle through the Multi-channel TV sound (MTS) options: Mono, Stereo and SAP (Second Audio Program).
6. **PIP**: Press this button to enter PIP function.
7. **PIC.Size**: Press to change the screen size, such as Full, 4:3, Panoramic. (Note: In VGA mode, it can select picture size is Full. While in DTV mode, it can select picture size is: Full and 4:3.)
8. **Freeze**: Press to freeze the picture, press again to restore the picture. (This button is not available for VGA mode.)
9. **P.Mode**: Press repeatedly to cycle through the picture mode: Hi-Bright, User, Cinema, Normal and Vivid.
10. **PIP Pos.**: Press to change the PIP window position under PIP mode.
11. **Sleep**: Press repeatedly until it displays the time in minutes (15 Min, 30 Min, 60Min, 90 Min ,120 Min and, OFF) that you want the TV to remain on before shutting off. To cancel sleep time, press **Sleep** button repeatedly until sleep OFF appears.
12. **Zoom**: Press to zoom the image. (This button is not available for VGA mode.)
13. **S.Mode**: Press repeatedly to cycle through the sound mode: Normal, News, Cinema, Concert and User.
14. **PIP Swap**: Press to switches the Main window or Sub window picture.
15. **Display**: Press to display the channel information and it disappear after 3 seconds.
16. **DTV**: Press to select Digital TV mode.
17. **0~9 Number Buttons**: In TV mode, press 0~9 to select a channel; the channel changes after 2 seconds. In DVD mode, press 0~9 to input the items.
18. **EPG**: Press to display EPG (Electronic Program Guide) menu.
19. **DOT**: Press number buttons with it to select the channels directly in DTV.
20. **Source**: Press to select the signal source.
21. **Recall**: Press to return previous channel.
22. **Enter**: To select an item, press Enter to confirm.
23. **VOL +/-**: Press to adjust the volume.
24. **CH +/-**: Press to scan through channels. To scan quickly through channels, press and hold down either channels.
25. <,∧,∨,>: Press <,∧,∨,> to move the on-screen cursor.

(Continued on next page)

26 **Menu**: Press to enter on-screen setup menu, press again to exit.

27 ◀◀, ▶▶ : Press to search the backward or forward.

28 ▶/II : Press to play or pause the DVD disc.

29 ■ : Press to stop playing the disc.

30 |◀◀, ▶▶| : Press to skip the backward or forward.

31 ⏏ : Press to open or close the disc tray.

32 **DVD Menu**: Press to return DVD disc menu.

33 **Prog.**: Press to display the program menu. Press it again to exit.

34 **Repeat**: Press repeatedly to cycle through the options: CHAPTER, TITLE, ALL and nothing.

35 **Subtitle**: Press to select desired DVD subtitle.

36 **Audio**: Press to select desired audio track.

37 **Setup**: Press to display a menu. Press it again to exit menu.

38 **Angle**: Press to select desired viewing angle of the Video (disc feature).

39 **Title**: Press to display to DVD disc title.

40 **DVD Info**: Press to display DVD information.

41 **Color Buttons**:
(Only available in DTV EPG mode)
**Red**: Press this button to access the red item or page.
**Blue**: Press this button to access the blue item or page.
**Green**: Press this button to access the green item or page.
**Yellow**: Press this button to access the yellow item or page.

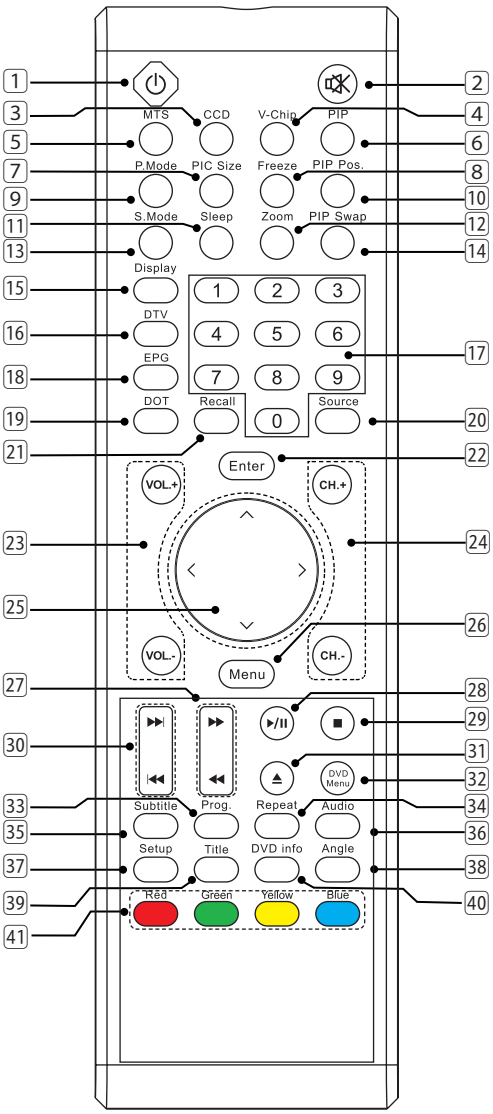


*Note: Press CH+/- on the remote control can turn on TV set from last preview mode.*

**Reference No : LCT3701AD**

## *Attachment 1*： Electrical & Optical Specification

| *No.* | *Items* | *Instruction* | *Typical* | *Limit* | *Unit* |
|---|---|---|---|---|---|
| 1 | Video sensitivity | For 30dB S/N | 44 | ≤51 | dBuV |
| 2 | FM sound sensitivity | For 30dB S/N | 21 | ≤35 | dBuV |
| 3 | Color sensitivity | For RF transmission | 37 | ≤40 | dBuV |
| 4 | CCD sensitivity | TV screen refreshes 40 times number of mistakes≤8 | 43 | ≤50 | dBuV |
| 5 | Minimum NICAM threshold | Without crackline noise | N/A | N/A | dBuV |
| 6 | Stereo Channel Separation | BTSC. | 18 | ≥15 | dB |
| 7 | AGC static characteristic | Accept. Picture/Sound repr. | 90 | ≥90 | dBuV |
| 8 | Selectivity | Adjacent sound carrier | 30 | ≥28 | dB |
| | | Below adjacent sound carrier | 30 | ≥30 | |
| | | Adjacent picture carrier | 45 | ≥40 | |
| | | Up adjacent picture carrier | 40 | ≥30 | |
| 9 | IF rejection | | 55 | ≥45 | dB |
| 10 | Image rejection | VHF | 57 | ≥45 | dB |
| | | UHF | 55 | ≥40 | |
| 11 | AFT pull-in range | | ±1.0 | ≥\|±1.0\| | MHz |
| 12 | Chroma sync pull-in range | | ±500 | ≥\|±200\| | Hz |
| 13 | Color killer function | | -11 | ≤-10 | dB |

| | | | | | | | |
|---|---|---|---|---|---|---|---|
| 14 | Resolution | RF | Horizontal | PAL | 300 | ≥300 | Lines |
| | | | | NTSC | 260 | ≥240 | Lines |
| | | | Vertical | PAL | 410 | ≥400 | Lines |
| | | | | NTSC | 320 | ≥300 | Lines |
| | | Video | Horizontal | | 450 | ≥450 | Lines |
| | | | Vertical | | 400 | ≥400 | Lines |

| | | | | | | | |
|---|---|---|---|---|---|---|---|
| 15 | Color Coordination | White | Xw | Full Pattern | 0.285 | 0.285±0.02 | |
| | | | Yw | | 0.293 | 0.293±0.02 | |
| 16 | View Angle(Lo/3) | Horizontal | | | 170 | ≥170 | Degree |
| | | Vertical | | | | | |
| 17 | Overscan | | | Cross hatch signal | 96 | 94~98 | % |
| 18 | Picture position | | | In all direction | ±2 | ≤\|±3\| | mm |
| 19 | H sync pull-in range | | | | ±400 | ≥\|±200\| | Hz |
| 20 | V sync pull-in range | | | | 6 | ≥6 | Hz |
| 21 | Audio frequency response | | | ±3dB ref. to 1KHz | 0.15~12 | 0.2~12 | KHz |

| | | | | | |
|---|---|---|---|---|---|
| 22 | Max Audio Output Power | | 7×2 | ≥5.0×2 | W |
| 23 | Audio output power 10% THD | 1KHz 10% THD | 6×2 | ≥4.0×2 | W |
| 24 | THD | Po=0.5W | 0.5 | ≤3 | % |
| 25 | Signal to buzz ratio | coeighting | 50 | ≥30 | dB |
| 26 | Minimum volume hum | coeighting | 6 | ≤10 | mVrms |
| 27 | Maximum woofer output power | | N/A | N/A | W |
| 28 | Woofer audio frequency response | ?3dB ref. to 15Hz AV mode | N/A | N/A | Hz |
| 29 | Tone low frequency | 100Hz ref. to 1KHz AV mode | ±8 | ≥\|±3\| | dB |
| 30 | Tone high frequency | 10KHz ref. to 1KHz AV mode | ±8 | ≥\|±3\| | dB |
| 31 | Balance | Center | 0 | ≤\|±2\| | dB |
| | | Max. | 3 | >2 | |
| | | Min. | -35 | ≤-30 | |

| | | | | | |
|---|---|---|---|---|---|
| 32 | Video input level | | 1.0 | 1±0.3 | Vpp |
| 33 | Audio input level*（1） | | 1.0 * | 0.5±0.3 | Vrms |
| 34 | Video output level | | N/A | N/A | Vrms |
| 35 | Audio output level | | 0.3 | 0.5±0.3 | Vrms |
| 36 | AV Audio input max. level | | 2 | ≤2 | Vrms |
| 37 | AV Audio output L/R Separation | | 35 | ≥30 | dB |
| 38 | Power consumption | Operating | 200 | ≤200 | W |
| | | Stand by | 3 | ≤5 | W |
| 39 | IR receiving distance | 0 Degree | 7 | ≥6 | m |
| 40 | IR receiving angle left/right | 5m | 60 | ≥45 | Degree |
| | IR receiving angle Up/down | | 20 | ≥15 | Degree |
| 41 | Dielectric strength | DC 3KV 1min. | 5 | ≤10 | mArms |
| 42 | The vibration noise from electromagnetic devices in LCD-TV set | The distance between the tester and the LCD-TV set is four times as many as the screen height | No obvious vibration noise can be heard | | |

**Reference No : LCT3701AD**

**Test Condition**

**All tests shall be performed under the following conditions unless otherwise specified**

| | | |
|---|---|---|
| **1** | **Picture Modulation** | **87.5%** |
| **2** | **Sound Modulation** | **27KHz Dev. For DK/I/BG**<br>**15KHz Dev. For M/N** |
| **3** | **Picture to Sound Ratio** | **10dB** |
| **4** | **Sound Artificial Load Resistor** | **8 ohm** |
| **5** | **Video signal** | **Stair and Special** |
| **6** | **Audio signal** | **1KHz sine wave 0.5Vrms** |
| **7** | **Other conditions:**<br>**A. Switch LCD-TV on and let it warm up for more than 30 minutes.**<br>**Viewing distance: 3H (H: Panel High) in front of LCD, about 2M.**<br>**B. Brightness, Contrast, Saturation, Tint, sharpness set at normal.**<br>**C. RF test point: Video output.** | |
| **8** | **Note:**<br>***(1) Now this project cannot fit the limited spec. the typical audio input level is 1.0 Vrms,** | |

# DVD player's spec. For LCD-TV Combo

| Division | Section | Remarks |
|---|---|---|
| General | name | AKAI |
| | Marketing Area( setup default language) | USA |
| | Power supply | +5v,+3.3v |
| | Power Consumption | 15W |
| | Manufactruer of Loader mechanism | Foryou DL06-LS |
| DVD Module | Opitical Pick UP | Sanyo HD-62/65 |
| | Chipset used | MTK 1389FE |
| Playback Disc Type | Playable Media Type | Playable Disc Type: DVD, CD, |
| | Playable Disc Type | DVD(Single/ Dual layer, Double sided), CD |
| | Disc Size | 8cm/12cm |
| | Regional code | Regional 1 |
| | NTSC/ PAL Disc playback | O/O |
| Video | Video output signal | NTSC |
| | Video DAC | 27MHz/ 10bit |
| Audio | Audio DAC | 48Khz/ 96KHz/24-bit:selectable |
| | Dynamic range | Present |
| | Dolby digital decoder | Present |
| | DTS decoder | optional |
| | SRS + TruSurround for 2 channel | Not present |
| | 3D Virtual surround for 2 channel | Not present |
| Playback Features | Fast forward/backward | x2,x4,x8,x16,x32 |
| | Slow motion forward | x1/2,x1/4,x1/8,x1/16 |
| | Slow motion backward | optional |
| | Still picture | Present |
| | Frame by frame forward/reverse | Forward only (Step function) |
| | Skip forward/reverse | Present |
| | Repeat function | Present |
| | DVD closed caption | Present |
| | Transition Effect for picture CD | Not present |
| | Rotation of picture for picture CDs | Present |
| | Last Memory | Present |
| Display user operation | Graphical user interface | Not present |
| | OSD Language | 3 (ENG is base ,SPA and French) |
| | Subtitle | Present |
| | Screen saver | Present |
| | Resume play | Present |
| | Program function | Present |
| | PBC ON/OFF | Default on PCB |
| | Parental lock | Passward : 0000 |
| | Picture mode selector | 16:9, 4:3 LB, 4:3 PS(4:3 PS as default) |
| | Intro scan | Not present |
| | Digest in VCD | Present, only for PIC CD |
| | Time search | Present |
| | Multi angle | Present |
| | Selectable audio language streams | Present |
| Front Panel | kalaoke function | x |
| | VFD/ LED | x |
| | No. of keys | 3(Open/Close, Play, Stop) |
| Rear Panel | Composite Video output | x |
| | Component Video output | x |
| | Progressive scan output (480P) | Present |
| | 2 channel audio output | Present |
| | Coaxial audio output | Present |

# ATSC SYSTEM

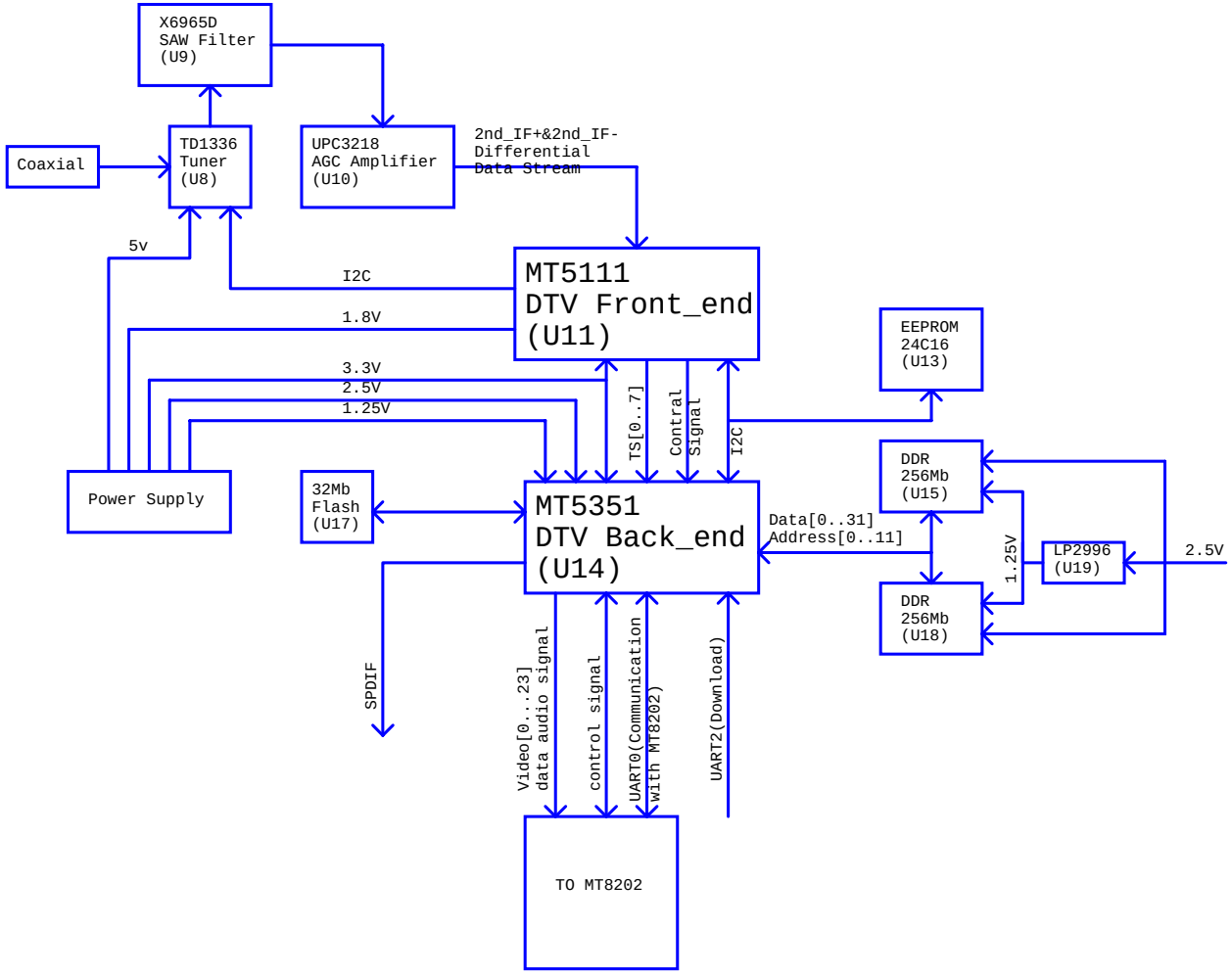




KAWA Confidential

ZhongShan KAWA Electronic Inc.

| | | | |
|---|---|---|---|
| Title: MT5351 Block | | | |
| Size: C | Document Number: AKAI_MT8202_MT5351_V1.0 | Drawn: <Designer> | Rev: 1 |
| | | Checked: <Checker> | |
| Date: Friday, March 17, 2006 | | Sheet 1 of 2 | |

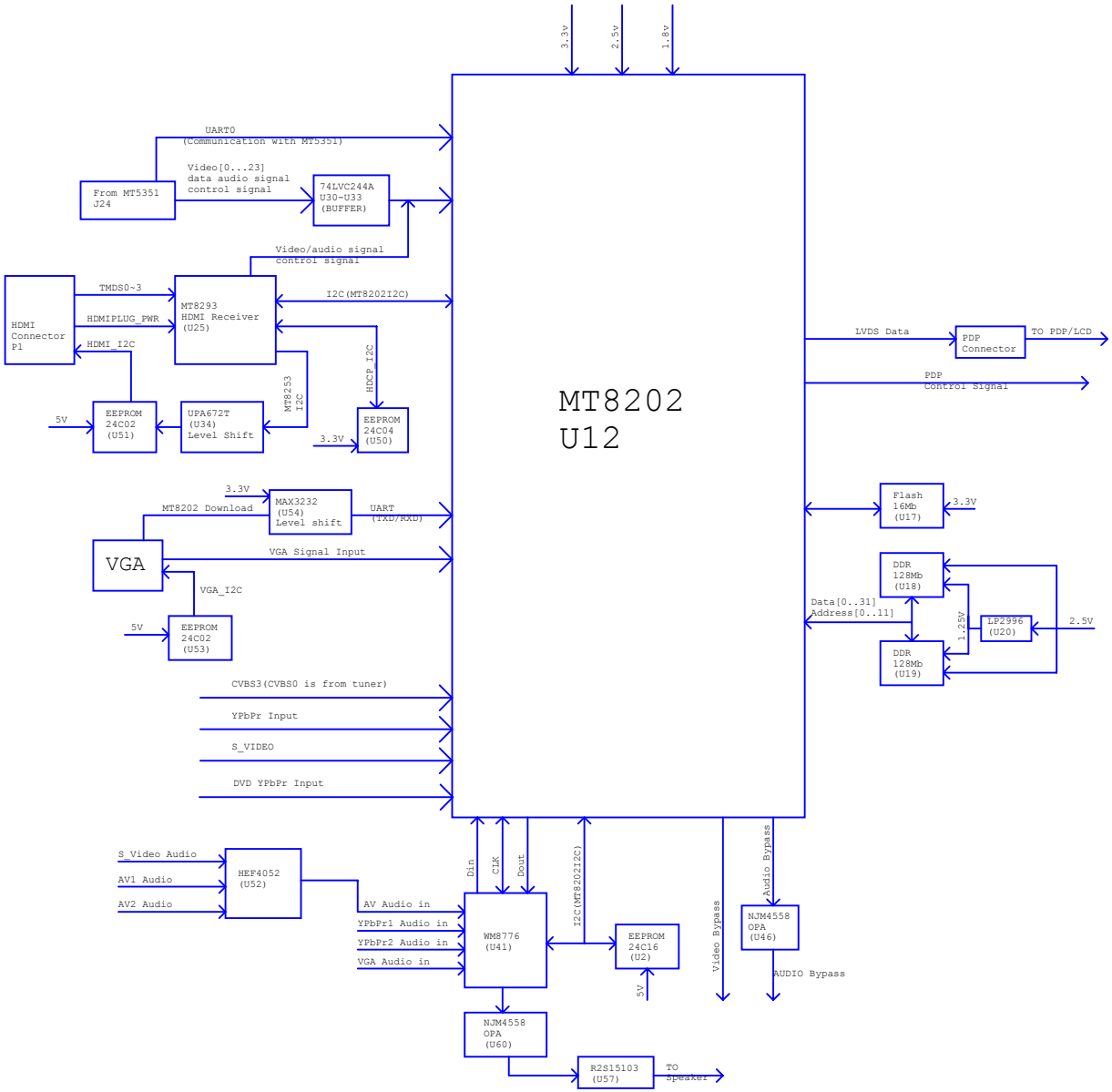


KAWA Confidential

ZhongShan KAWA Electronic Inc.

| | | | |
|---|---|---|---|
| Title | MT8202 Block | | |
| Size: D | Document Number: AKAI_MT8202_MT8351_V1.0 | Drawn: <Designer> | Rev: 1 |
| | | Checked: <Checker> | |
| Date: Friday, March 17, 2006 | | Sheet 2 of 2 | |

# Combo DVD

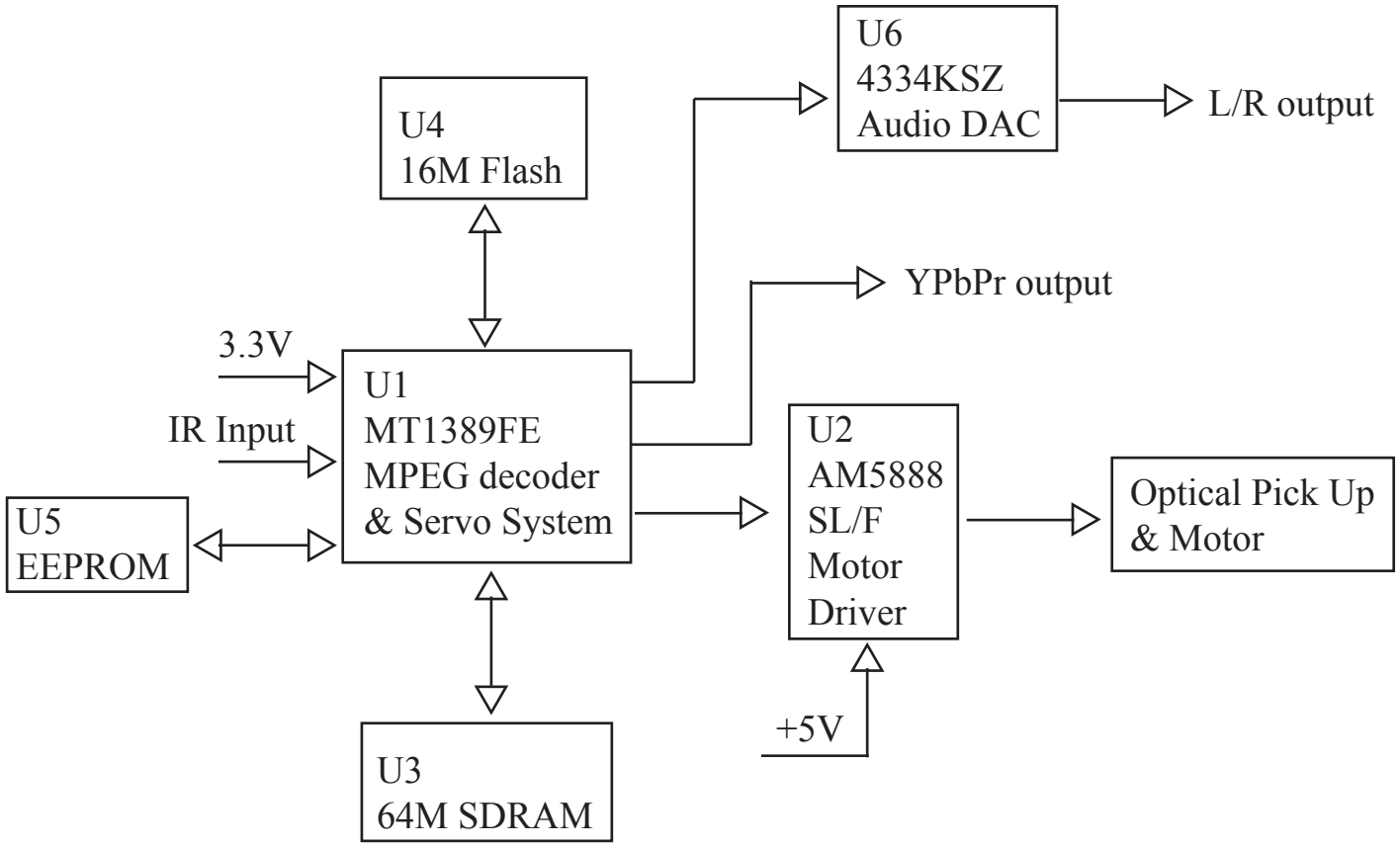
U6
4334KSZ
Audio DAC
L/R output
U4
16M Flash
YPbPr output
3.3V
U1
MT1389FE
MPEG decoder
& Servo System
IR Input
U2
AM5888
SL/F
Motor
Driver
Optical Pick Up
& Motor
U5
EEPROM
+5V
U3
64M SDRAM

# Parts Position

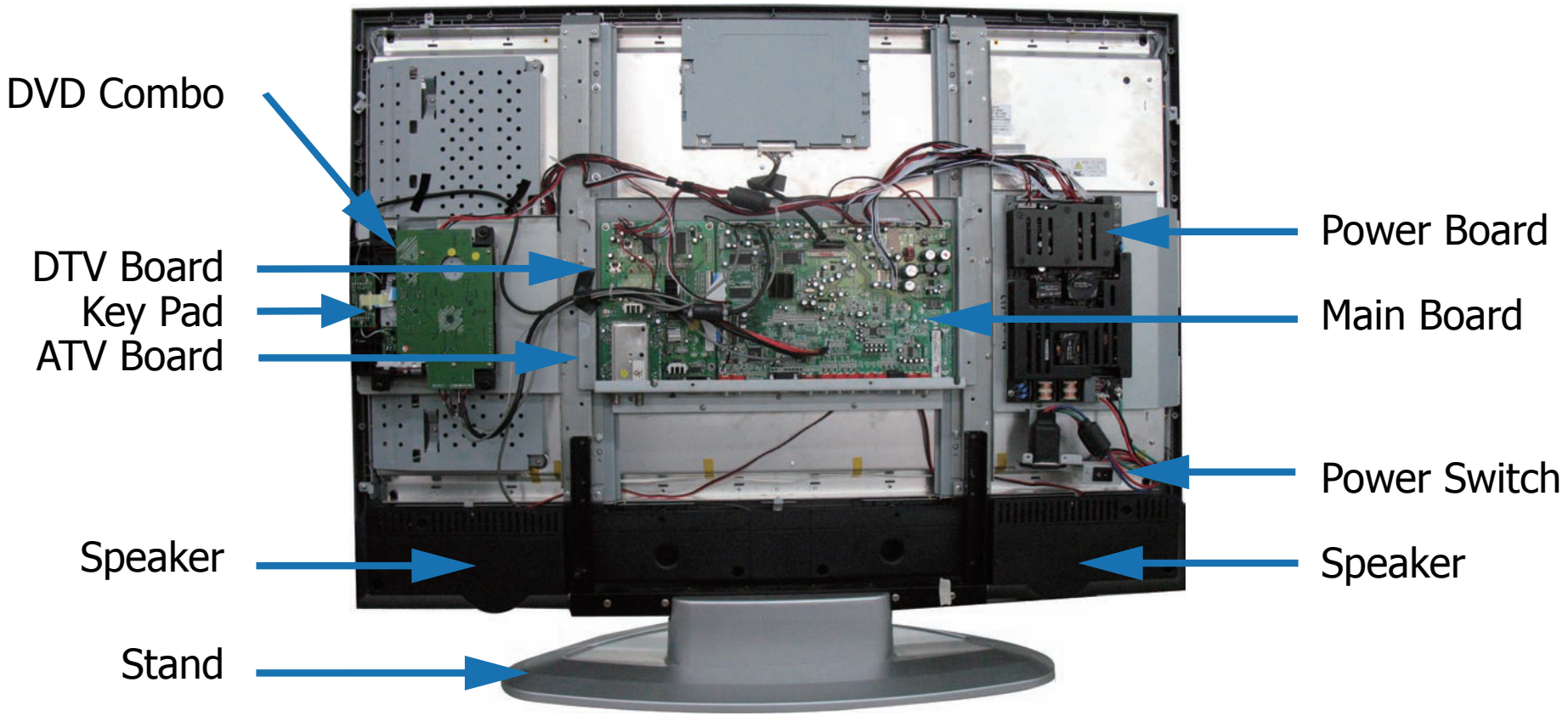

# MT8202E (PBGA388) LCDTV BOARD 4 LAYERS FOR AKAI

1. INDEX / POWER / RESET / EEPROM
2. LDO
3. MT8202E PBGA388
4. MT8202 DECOUPLING
5. DDR MEMORY & FLASH
6. MT5351 INTERFACE
7. HDMI MT8293
8. DAUGHTER BOARD IN
9. WM8776 & VIDEO BYPASS
10. AUDIO / VIDEO IN CIRCUIT
11 . VGA & PC AUDIO IN
12. LVDS OUT
13. BACK LIGHT / KEYPAD
14. TUNER IN
15. AV IN
16. AUDIO IN
17.AUDIO Amplifier

| Rev | History | P# | Date |
|---|---|---|---|
| AKAI_MT8202_27US_LVDS_V0.0 | New | | 2005/11/22 |
| AKAI_MT8202_27US_HDMI_LVDS_V0.0 | ADD HDMI / VIDEO /AUDIO CONNECTOR INPUT IN | | |

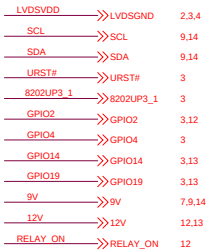


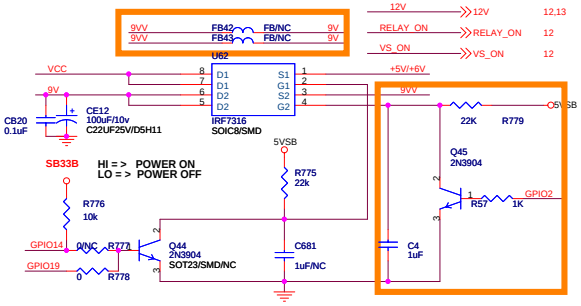


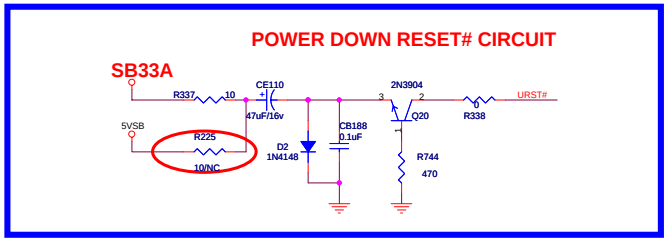


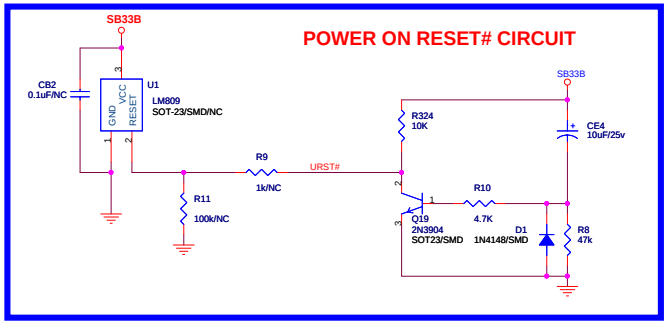


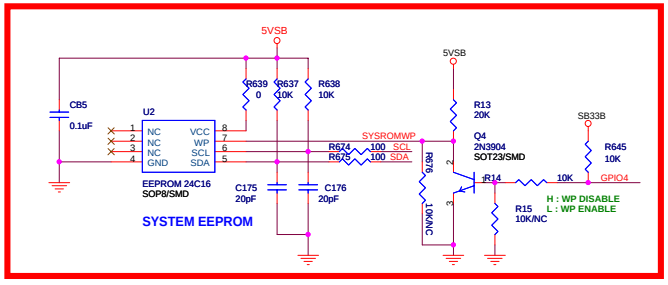


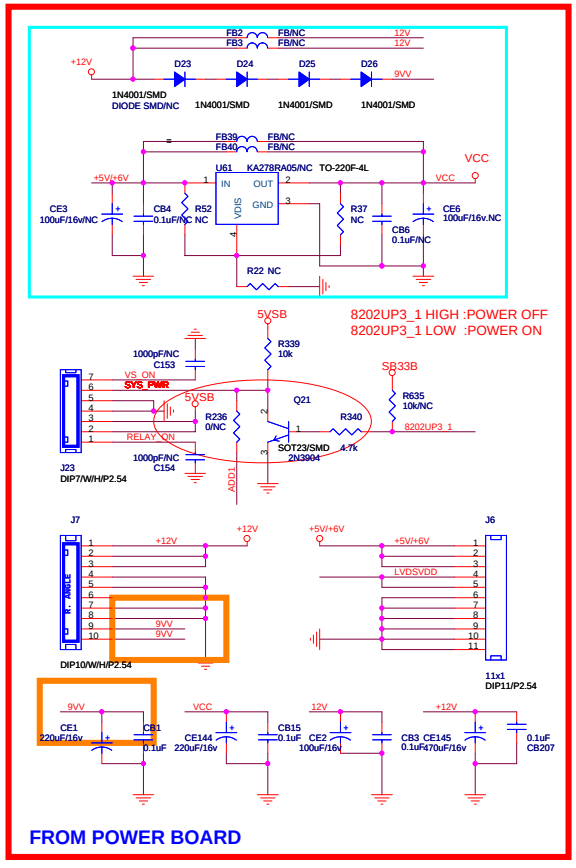


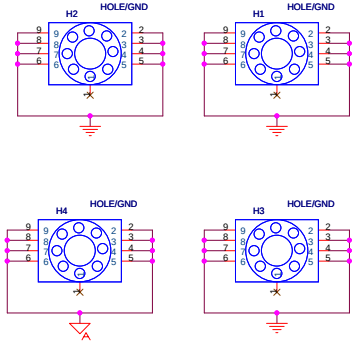


KAWA Confidential

| | | | |
|---|---|---|---|
| Title: INDEX / POWER / RESET / EEPROM | | | |
| Size: C | Document Number: AKAI_MT8202_27US_LVDS_V0.0 | <Designer> | Rev: 1 |
| | | Checked: <Checker> | |
| Date: Thursday, April 13, 2006 | | Sheet 1 | 17 |

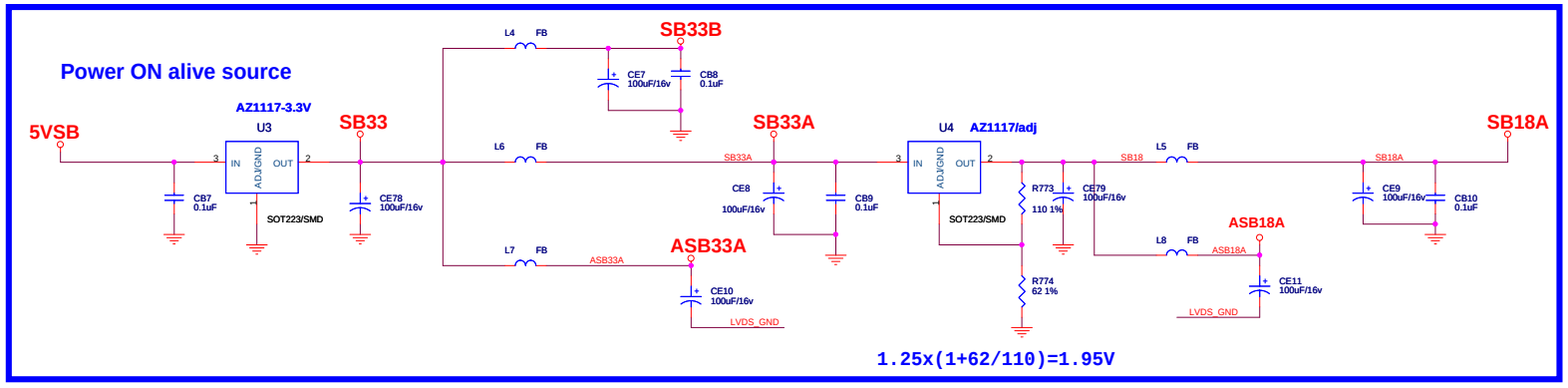


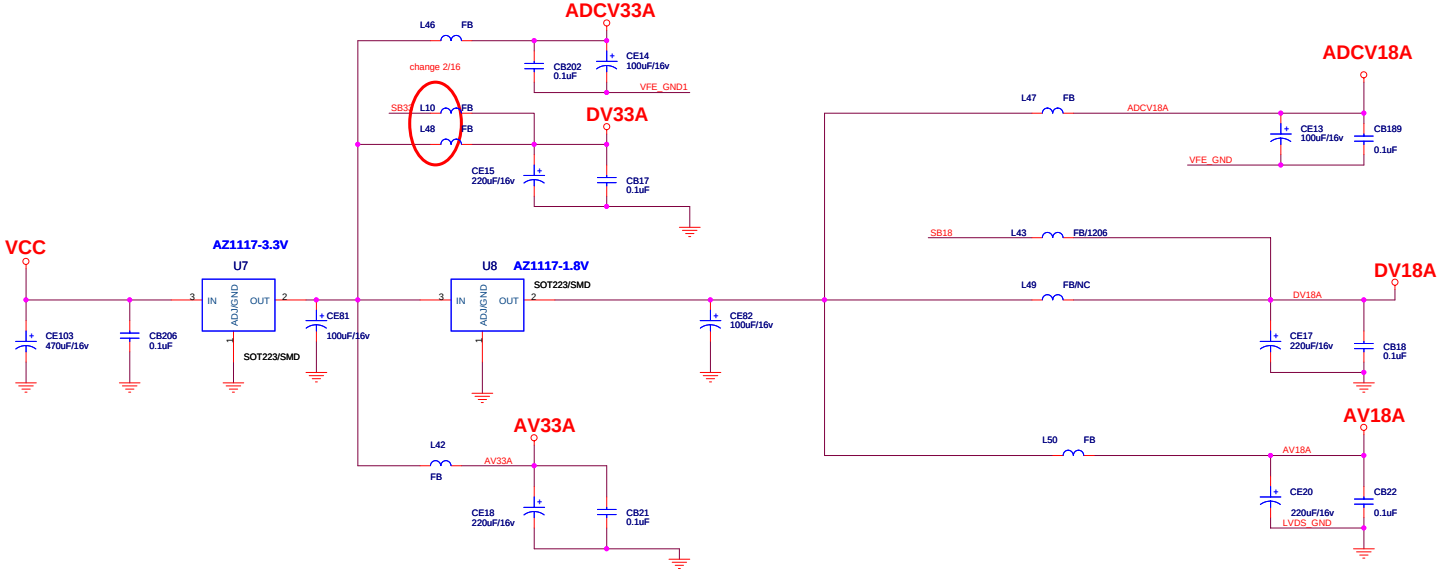


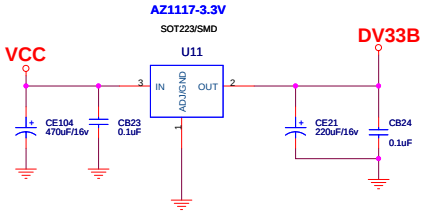


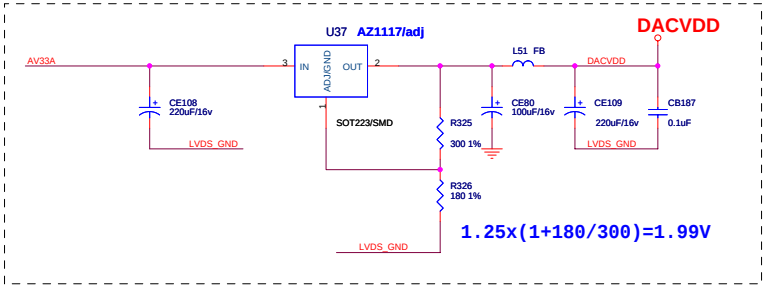


LVDS_GND >> LVDS_GND 3,4,12

VFE_GND >> VFE_GND 3,4,8,11

VFE_GND1 >> VFE_GND1 3,4,8,11

KAWA Confidential

| | | | |
|---|---|---|---|
| Title: LDO | | | |
| Size: C | Document Number: AKAI_MT8202_27US_LVDS_V0.0 | <Designer> | Rev: 1 |
| | | Checked: <Checker> | |
| Date: Thursday, April 13, 2006 | | Sheet 2 of 17 | |

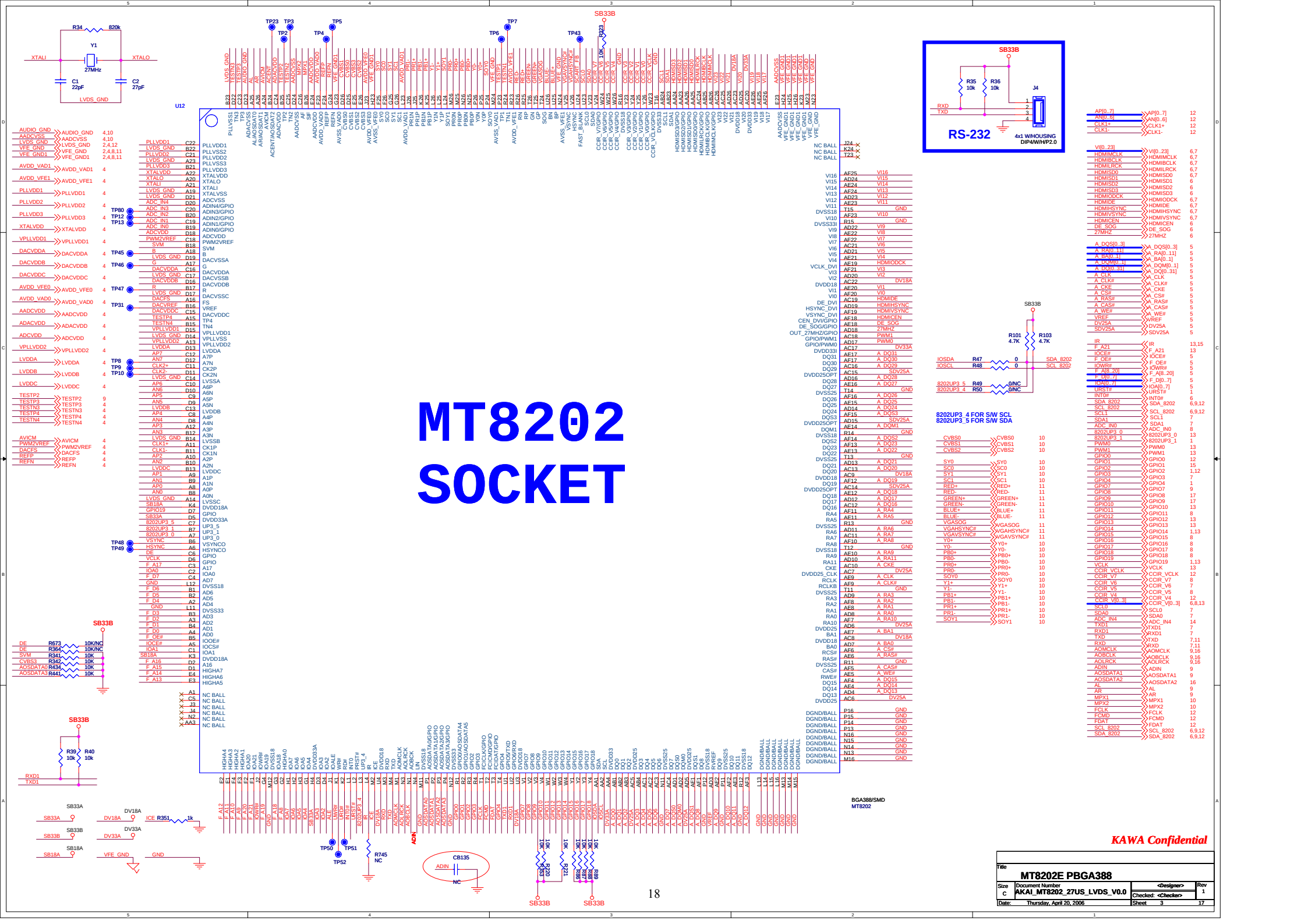
MT8202
SOCKET
U12
SB33B
RS-232
4x1 W/HOUSING
DIP4/W/H/P2.0
J4
R35 10k
R36 10k
RXD
TXD
R101 4.7K
R103 4.7K
R47 0
R48 0
SDA_8202
SCL_8202
R49 0/NC
R50 0/NC
8202UP3_4 FOR S/W SCL
8202UP3_5 FOR S/W SDA
Y1
27MHz
C1 22pF
C2 27pF
R34 820k
LVDS_GND
XTALI
XTALO
BGA388/SMD
MT8202
KAWA Confidential
MT8202E PBGA388
Document Number
AKAI_MT8202_27US_LVDS_V0.0
Rev 1
Thursday, April 20, 2006
Sheet 3 17
18

## STANDBY ANALOG POWER

### ASB18A

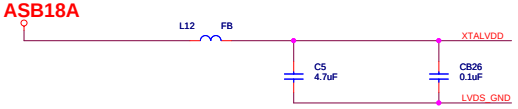


### ASB33A

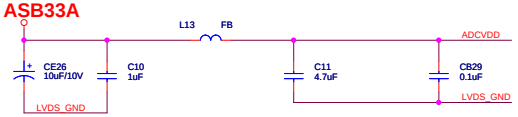


## NORMAL VIDEO DAC POWER

### DACVDD

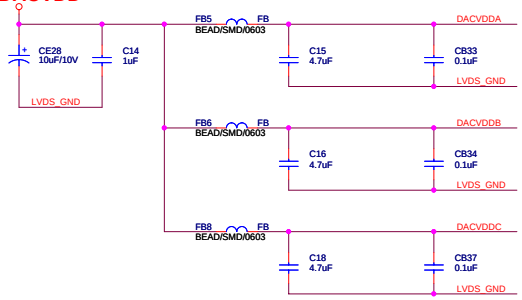


## NORMAL VIDEO DAC POWER

### AV33A

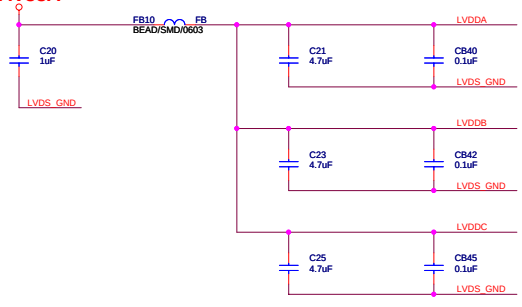


## NORMAL AUDIO ADC / DAC POWER

### ADCV33A

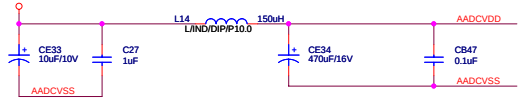


### ADCV33A

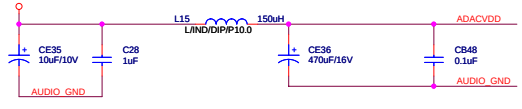


## NORMAL ANALOG POWER

### ASB18A

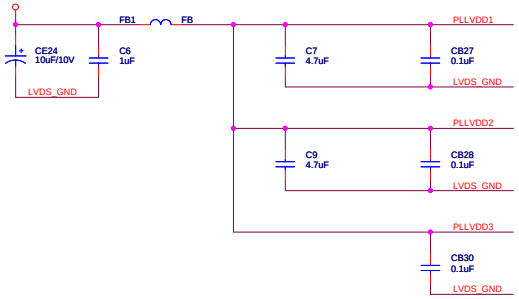


### AV18A

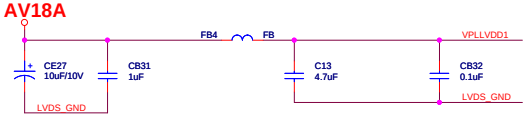


### AV33A

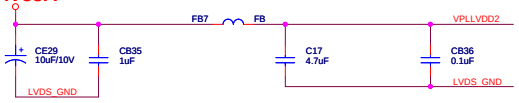


## NORMAL VIDEO ADC POWER

### ADCV33A

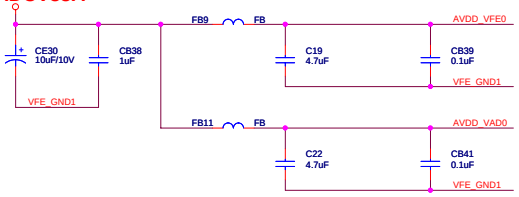


### ADCV18A

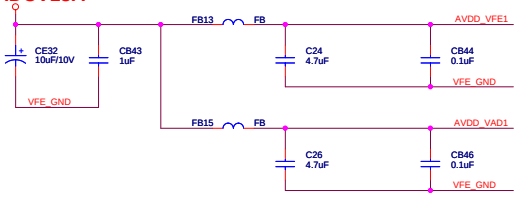


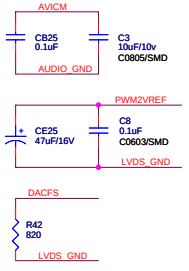


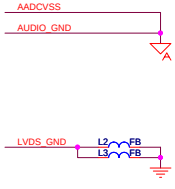


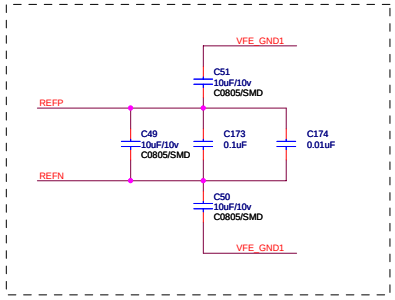


| | | | |
|---|---|---|---|
| TESTP3 | R43 | 49.9 1% | PLLVDD1 |
| TESTN3 | R44 | 49.9 1% | PLLVDD1 |
| TESTP4 | R45 | 49.9 1% | VPLLVDD1 |
| TESTN4 | R46 | 49.9 1% | VPLLVDD1 |

## MT8202 DIGITAL POWER & DECOUPLING

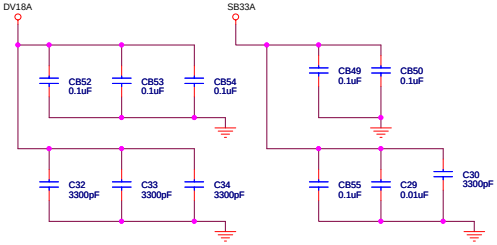


PUT ON NEARLY BGA

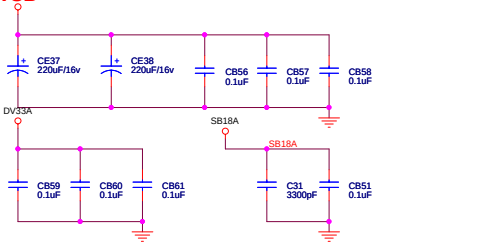


KAWA Confidential

| | | | |
|---|---|---|---|
| Title | MT8202 DECOUPLING | | |
| Size C | Document Number AKAI_MT8202_27US_LVDS_V0.0 | <Designer> | Rev 1 |
| | | Checked: <Checker> | |
| Date: Thursday, April 13, 2006 | | Sheet 4 | 17 |

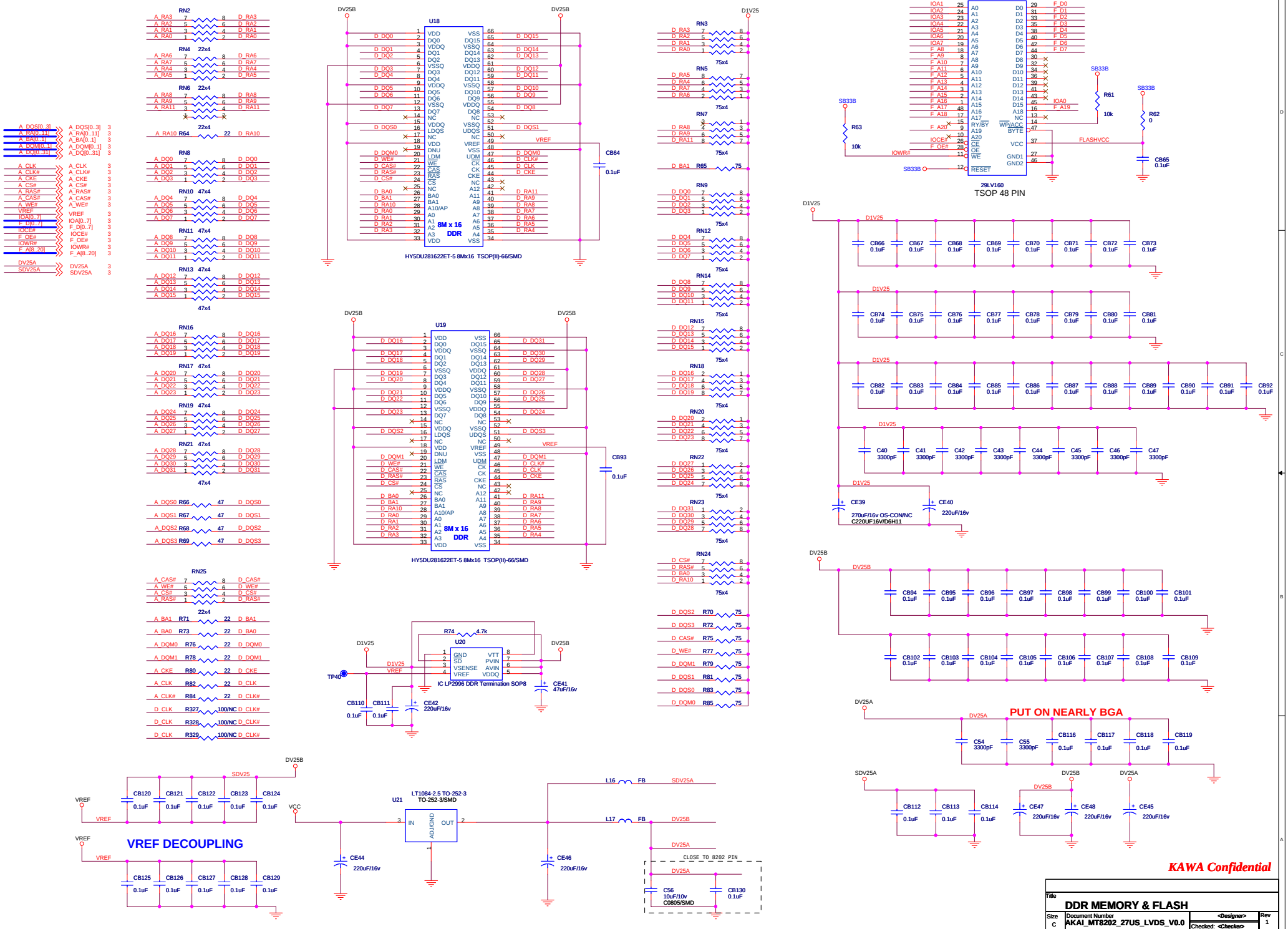
RN2
RN4 22x4
RN6 22x4
RN8
RN10 47x4
RN11 47x4
RN13 47x4
RN16
RN17 47x4
RN19 47x4
RN21 47x4
RN25
R64 22
R66 47
R67 47
R68 47
R69 47
R71 22
R73 22
R76 22
R78 22
R80 22
R82 22
R84 22
R327 100/NC
R328 100/NC
R329 100/NC
U18
U19
8M x 16 DDR
HY5DU281622ET-5 8Mx16 TSOP(II)-66/SMD
RN3
RN5 75x4
RN7 75x4
RN9 75x4
RN12 75x4
RN14 75x4
RN15 75x4
RN18 75x4
RN20 75x4
RN22 75x4
RN23 75x4
RN24 75x4
R65 75
R70 75
R72 75
R75 75
R77 75
R79 75
R81 75
R83 75
R85 75
U20
R74 4.7k
IC LP2996 DDR Termination SOP8
U21
LT1084-2.5 TO-252-3
TO-252-3/SMD
U17
29LV160
TSOP 48 PIN
R61 10k
R62 0
R63 10k
CB64 0.1uF
CB93 0.1uF
CE41 47uF/16v
CE42 220uF/16v
CE44 220uF/16v
CE46 220uF/16v
CB65 0.1uF
CE39 270uF/16v OS-CON/NC C220UF16V/D6H11
CE40 220uF/16v
C40 3300pF
C41 3300pF
C42 3300pF
C43 3300pF
C44 3300pF
C45 3300pF
C46 3300pF
C47 3300pF
CB54 3300pF
CB55 3300pF
CB112 0.1uF
CB113 0.1uF
CB114 0.1uF
CE47 220uF/16v
CE48 220uF/16v
CE45 220uF/16v
CB56 10uF/10v C0805/SMD
CB130 0.1uF
CLOSE TO 8202 PIN
PUT ON NEARLY BGA
VREF DECOUPLING
KAWA Confidential
DDR MEMORY & FLASH
AKAI_MT8202_27US_LVDS_V0.0
Thursday, April 13, 2006

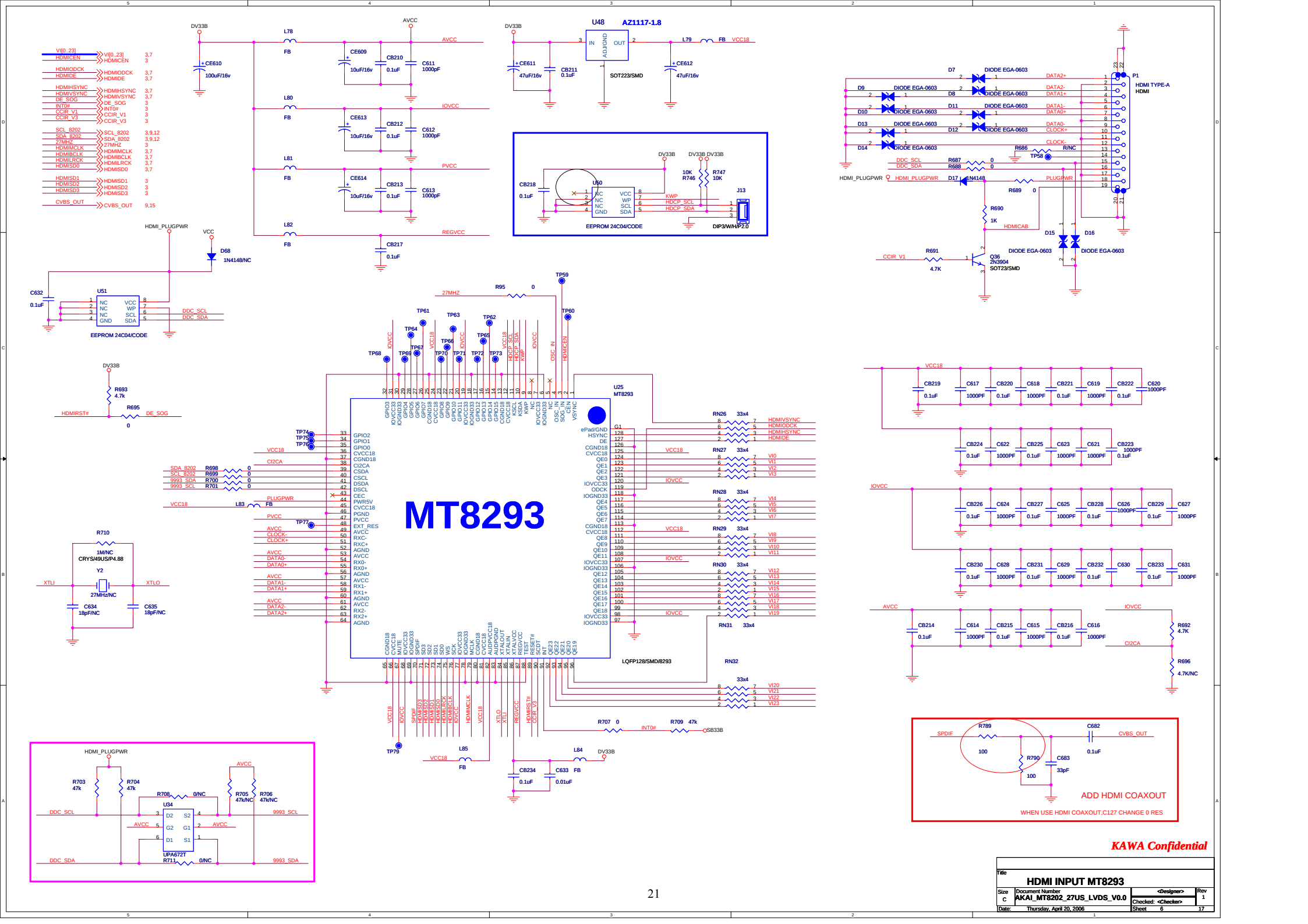
MT8293
U48 AZ1117-1.8
SOT223/SMD
EEPROM 24C04/CODE
DIP3/W/HP2.0
HDMI TYPE-A
HDMI
LQFP128/SMD/8293
ADD HDMI COAXOUT
WHEN USE HDMI COAXOUT,C127 CHANGE 0 RES
KAWA Confidential
HDMI INPUT MT8293
Document Number
AKAI_MT8202_27US_LVDS_V0.0
Thursday, April 20, 2006

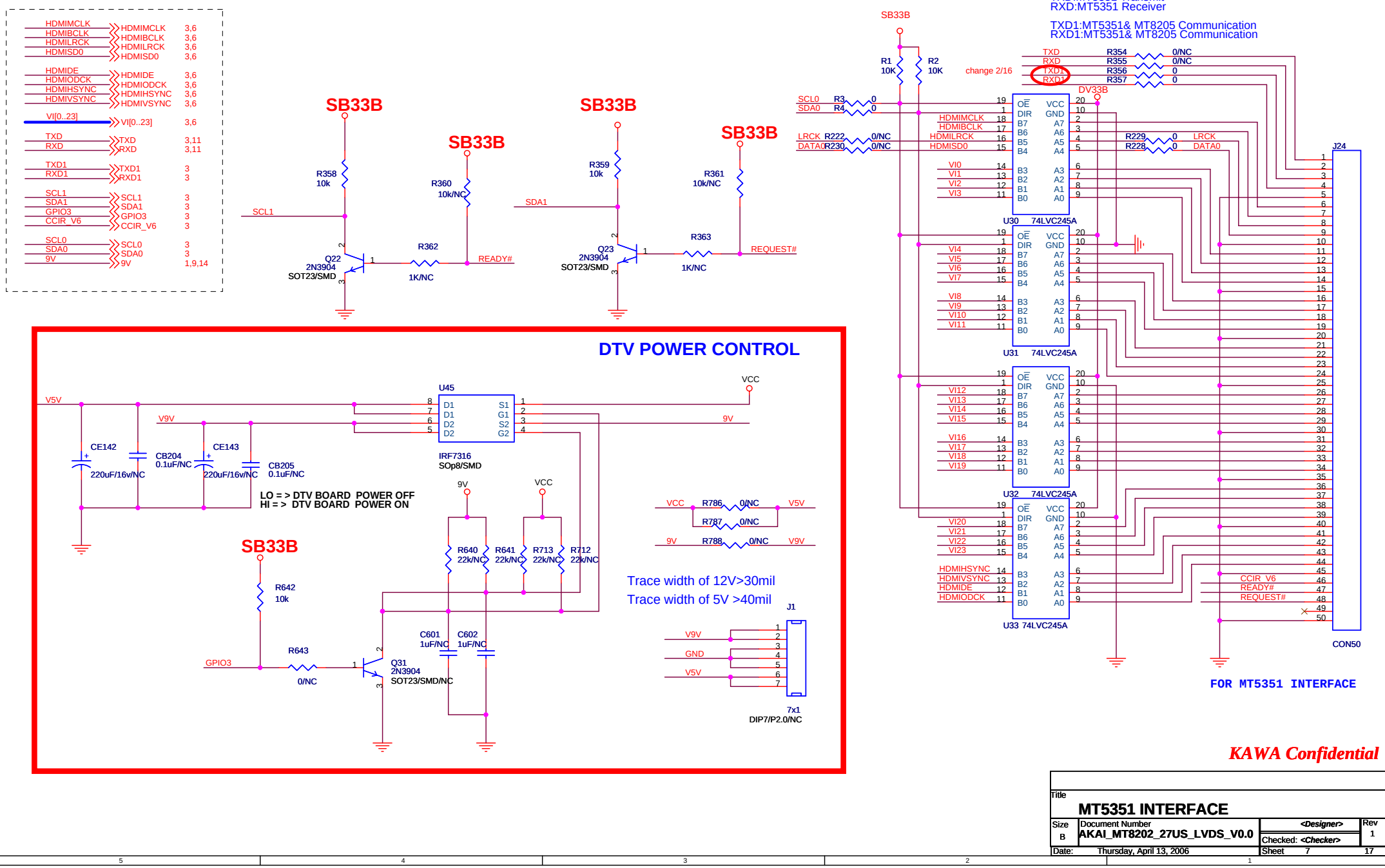
HDMIMCLK 3,6
HDMIBCLK 3,6
HDMILRCK 3,6
HDMISD0 3,6
HDMIDE 3,6
HDMIODCK 3,6
HDMIHSYNC 3,6
HDMIVSYNC 3,6
VI[0..23] 3,6
TXD 3,11
RXD 3,11
TXD1 3
RXD1 3
SCL1 3
SDA1 3
GPIO3 3
CCIR_V6 3
SCL0 3
SDA0 3
9V 1,9,14
SB33B
R358 10k
R360 10k/NC
SCL1
Q22 2N3904 SOT23/SMD
R362
1K/NC
READY#
R359 10k
SDA1
Q23 2N3904 SOT23/SMD
R363
1K/NC
R361 10k/NC
REQUEST#
DTV POWER CONTROL
V5V
V9V
CE142 220uF/16v/NC
CB204 0.1uF/NC
CE143 220uF/16v/NC
CB205 0.1uF/NC
LO = > DTV BOARD POWER OFF
HI = > DTV BOARD POWER ON
U45
IRF7316 SOp8/SMD
VCC
9V
R640 22k/NC
R641 22k/NC
R713 22k/NC
R712 22k/NC
R642 10k
R643 0/NC
GPIO3
Q31 2N3904 SOT23/SMD/NC
C601 1uF/NC
C602 1uF/NC
R786 0/NC
R787 0/NC
R788 0/NC
Trace width of 12V>30mil
Trace width of 5V >40mil
J1
7x1 DIP7/P2.0/NC
TXD:MT5351 Transmit
RXD:MT5351 Receiver
TXD1:MT5351& MT8205 Communication
RXD1:MT5351& MT8205 Communication
change 2/16
R1 10K
R2 10K
R354 0/NC
R355 0/NC
R356 0
R357 0
DV33B
SCL0 R3 0
SDA0 R4 0
LRCK R222 0/NC
DATA0 R230 0/NC
R229 0 LRCK
R228 0 DATA0
U30 74LVC245A
U31 74LVC245A
U32 74LVC245A
U33 74LVC245A
J24
CON50
CCIR_V6
READY#
REQUEST#
FOR MT5351 INTERFACE
KAWA Confidential
Title
MT5351 INTERFACE
Size B
Document Number AKAI_MT8202_27US_LVDS_V0.0
<Designer>
Checked: <Checker>
Rev 1
Date: Thursday, April 13, 2006
Sheet 7 17

## INPUT

| | | |
|---|---|---|
| ADC_IN0 | ADC_IN0 | 3 |
| CCIR_V0 | CCIR_V0 | 3 |
| CCIR_V5 | CCIR_V5 | 3 |
| CCIR_V7 | CCIR_V7 | 3 |
| GPIO11 | GPIO11 | 3 |
| GPIO15 | GPIO15 | 3 |
| GPIO16 | GPIO16 | 3 |
| GPIO17 | GPIO17 | 3 |
| GPIO18 | GPIO18 | 3 |
| VFE_GND | VFE_GND | 2,3,4,11 |
| AADCVSS | AADCVSS | 3,4,10 |
| AV1_R | AV1_R | 15 |
| AV1_L | AV1_L | 15 |
| AV2_R | AV2_R | 15 |
| AV2_L | AV2_L | 15 |
| SY_R | SY_R | 15 |
| SY_L | SY_L | 15 |
| Y2_INB | Y2_INB | 15 |
| Y2_GNDB | Y2_GNDB | 10,15 |
| CB2_INB | CB2_INB | 15 |
| CB2_GNDB | CB2_GNDB | 10,15 |
| CR2_INB | CR2_INB | 15 |
| CR2_GNDB | CR2_GNDB | 10,15 |
| Y3_INB | Y3_INB | 15 |
| Y3_GNDB | Y3_GNDB | 15 |
| CB3_INB | CB3_INB | 15 |
| CB3_GNDB | CB3_GNDB | 15 |
| CR3_INB | CR3_INB | 15 |
| CR3_GNDB | CR3_GNDB | 15 |
| 9V | 9V | 1,7,9,14 |

## OUTPUT

| | | |
|---|---|---|
| AV_R | AV_R | 9 |
| AV_L | AV_L | 9 |
| YQ | YQ | 10 |
| CBQ | CBQ | 10 |
| CRQ | CRQ | 10 |
| YQ_GND | YQ_GND | 10 |
| CBQ_GND | CBQ_GND | 10 |
| CRQ_GND | CRQ_GND | 10 |

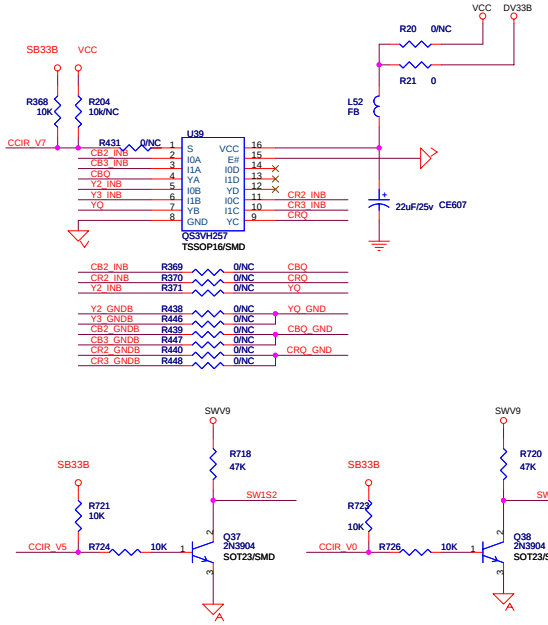


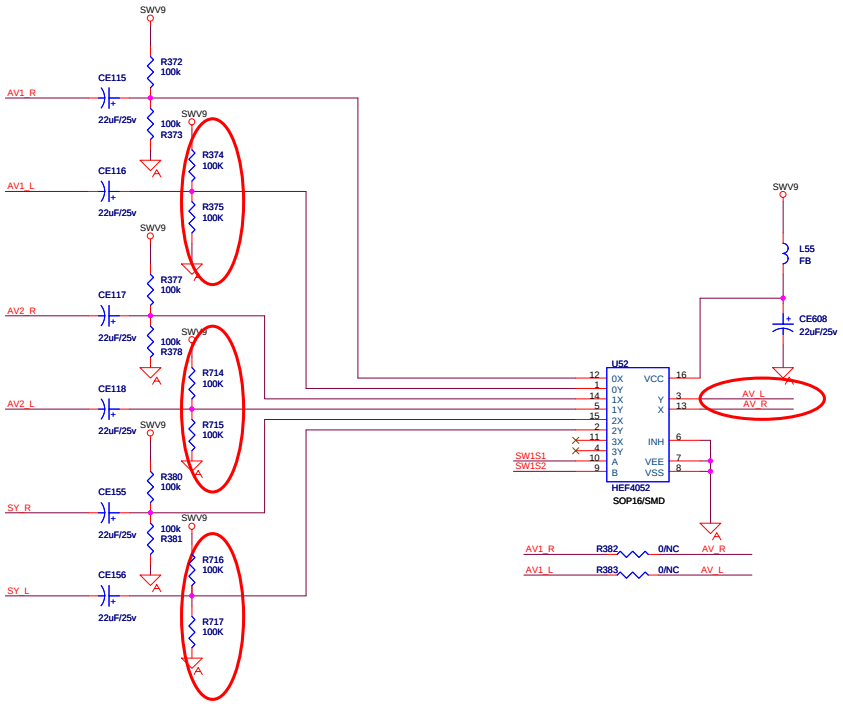


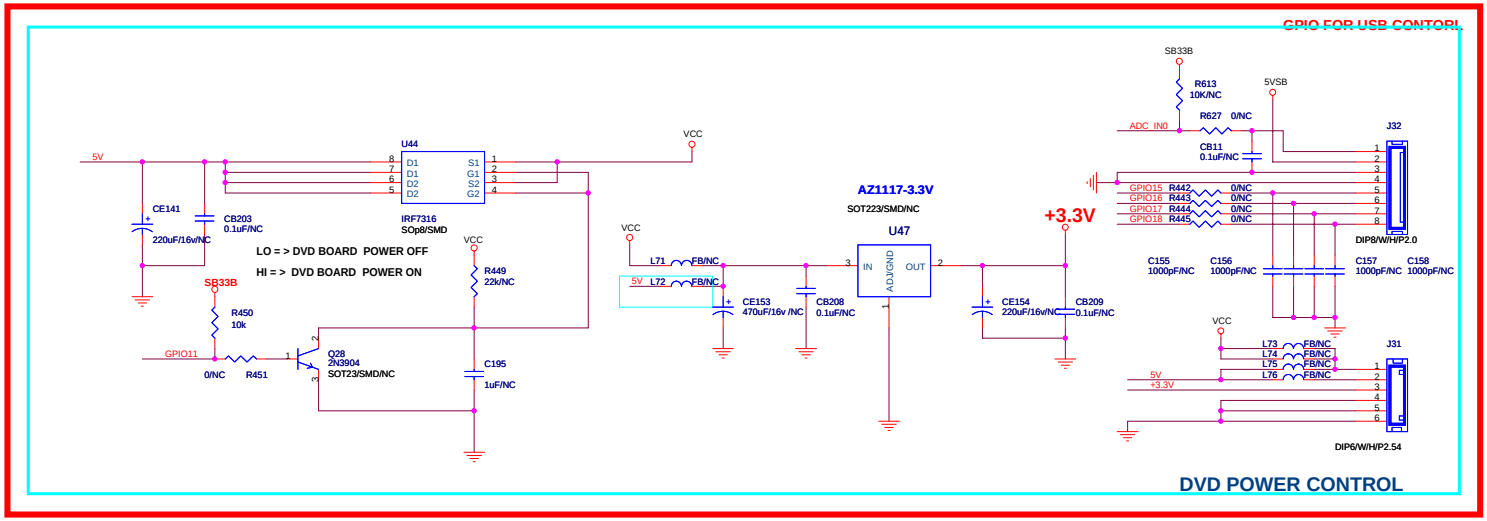


KAWA Confidential

| | | | |
|---|---|---|---|
| Title: DAUGHTER BOARD IN | | | |
| Size: C | Document Number: AKAI_MT8202_27US_LVDS_V0.0 | <Designer> | Rev: 1 |
| | | Checked: <Checker> | |
| Date: Thursday, April 13, 2006 | | Sheet 8 | 17 |

## INPUT

| | | |
|---|---|---|
| GPIO7 | GPIO7 | 3 |
| SCL | SCL | 1,14 |
| SDA | SDA | 1,14 |
| SDA_8202 | SDA_8202 | 3,6,12 |
| SCL_8202 | SCL_8202 | 3,6,12 |
| AOSDATA1 | AOSDATA1 | 3 |
| AOMCLK | AOMCLK | 3,16 |
| AOBCLK | AOBCLK | 3,16 |
| AOLRCK | AOLRCK | 3,16 |
| ADIN | ADIN | 3 |
| AV_R | AV_R | 8 |
| AV_L | AV_L | 8 |
| YPBPR1_L | YPBPR1_L | 15 |
| YPBPR1_R | YPBPR1_R | 15 |
| YPBPR2_R | YPBPR2_R | 15 |
| YPBPR2_L | YPBPR2_L | 15 |
| YPBPR3_R | YPBPR3_R | 15 |
| YPBPR3_L | YPBPR3_L | 15 |
| VGAR_IN | VGAR_IN | 11 |
| VGAL_IN | VGAL_IN | 11 |
| TESTP2 | TESTP2 | 3 |
| AR | AR | 3 |
| AL | AL | 3 |
| MU | MU | 16 |
| A_MUTE | A_MUTE | 17 |
| 9V | 9V | 1,7,14 |

## OUTPUT

| | | |
|---|---|---|
| AUSPR | AUSPR | 16 |
| AUSPL | AUSPL | 16 |
| AVR_OUT | AVR_OUT | 15 |
| AVL_OUT | AVL_OUT | 15 |
| CVBS_OUT | CVBS_OUT | 6,15 |

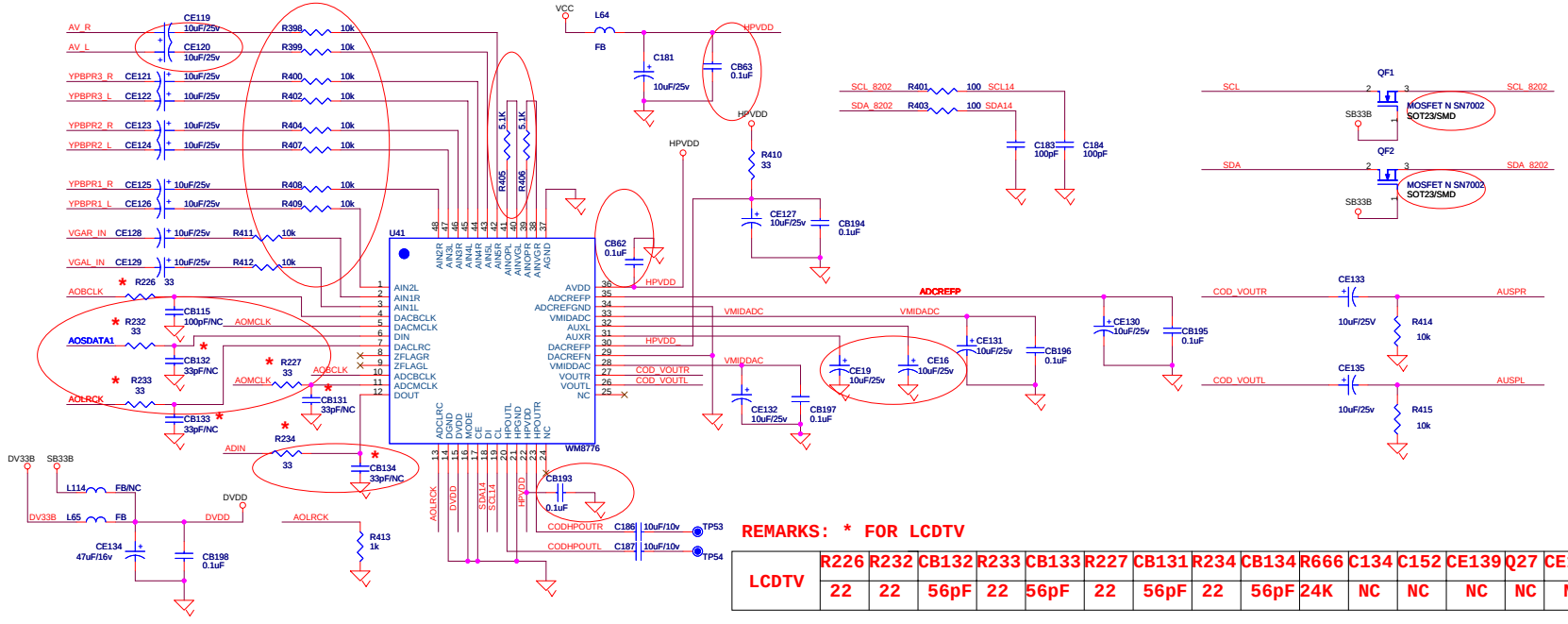


**REMARKS: * FOR LCDTV**

| | R226 | R232 | CB132 | R233 | CB133 | R227 | CB131 | R234 | CB134 | R666 | C134 | C152 | CE139 | Q27 | CE140 | CE138 |
|---|---|---|---|---|---|---|---|---|---|---|---|---|---|---|---|---|
| LCDTV | 22 | 22 | 56pF | 22 | 56pF | 22 | 56pF | 22 | 56pF | 24K | NC | NC | NC | NC | NC | NC |

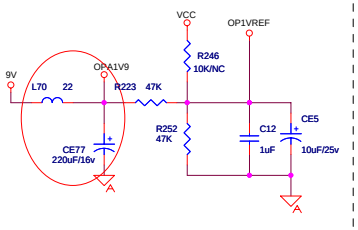


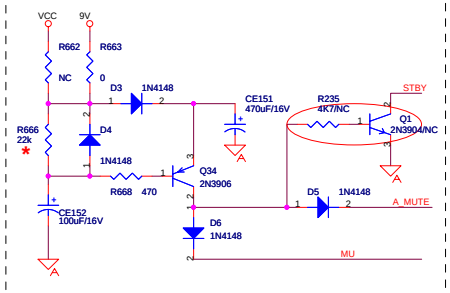


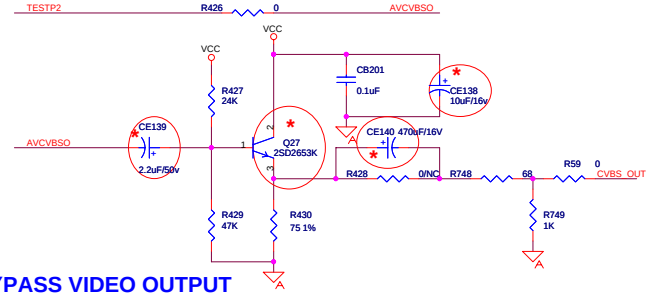


## BYPASS VIDEO OUTPUT

## AUDIO BYPASS MUTE

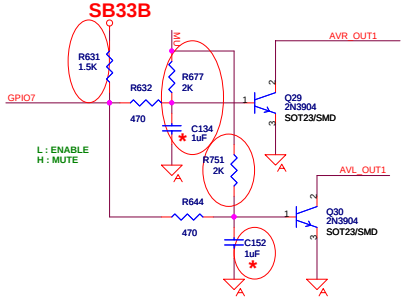


## BYPASS AUDIO OUTPUT

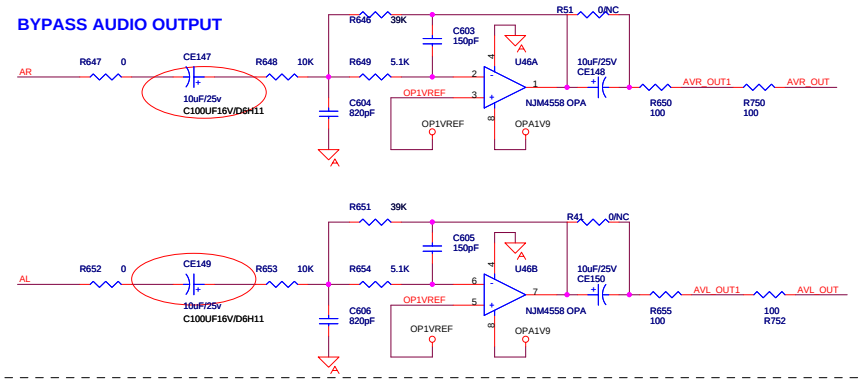


*KAWA Confidential*

| | | | |
|---|---|---|---|
| Title | M8776 & VIDEO BYPASS | | |
| Size C | Document Number AKAI_MT8202_27US_LVDS_V0.0 | <Designer> Checked: <Checker> | Rev 1 |
| Date: Saturday, April 22, 2006 | | Sheet 9 | 17 |

CVBS0 CVBS0 3
CVBS1 CVBS1 3
CVBS2 CVBS2 3

SY0 SY0 3
SC0 SC0 3

SY1 SY1 3
SC1 SC1 3

Y0+ Y0+ 3
Y0- Y0- 3
PB0+ PB0+ 3
PB0- PB0- 3
PR0+ PR0+ 3
PR0- PR0- 3
SOY0 SOY0 3

Y1+ Y1+ 3
Y1- Y1- 3
PB1+ PB1+ 3
PB1- PB1- 3
PR1+ PR1+ 3
PR1- PR1- 3
SOY1 SOY1 3

MPX1 MPX1 3

MPX2 MPX2 3

TO MT8202

TV_GND TV_GND 14
CVBS_0 CVBS_0 14
SIF SIF 14
AF AF 14
CVBS_1 CVBS_1 15
CVBS1_GND CVBS1_GND 15
CVBS_2 CVBS_2 15
CVBS2_GND CVBS2_GND 15
SY_1 SY_1 15
SY_1_GND SY_1_GND 15
SC_1 SC_1 15
SC_1_GND SC_1_GND 15
SY_0 SY_0 15
SY_0_GND SY_0_GND 15
SC_0 SC_0 15
SC_0_GND SC_0_GND 15

SOY1 SOY1 3
SOY0 SOY0 3
Y1_INB Y1_INB 15
Y1_GNDB Y1_GNDB 8,15
CR1_INB CR1_INB 15
CR1_GNDB CR1_GNDB 8,15
CB1_INB CB1_INB 15
CB1_GNDB CB1_GNDB 8,15
CBQ CBQ 8
CRQ CRQ 8
YQ YQ 8
YQ_GND YQ_GND 8
CBQ_GND CBQ_GND 8
CRQ_GND CRQ_GND 8

FROM AV BOARD

AADCVSS AADCVSS 3,4

## THIS PAGE NEARLY IC

CVBS_0 R197 0 C110 47nF CVBS0
C113 330pF TV_GND

CVBS_1 R200 0 C117 47nF CVBS1
C120 330pF CVBS1_GND

CVBS_2 R424 0 C188 47nF CVBS2
C189 330pF CVBS2_GND

SY_0 R198 0 C111 47nF SY0
C114 330pF SY_0_GND

SC_0 R201 0 C118 47nF SC0
C121 330pF SC_0_GND

SY_1 R205 0 C125 47nF SY1
C128 330pF SY_1_GND

SC_1 R209 0 C132 47nF SC1
C135 330pF SC_1_GND

R55 0 C112 4.7nF SOY0

YQ R199 68 C115 100nF Y0+
C116 15pF
YQ_GND R202 100 C119 100nF Y0-

CBQ R203 68 C122 100nF PB0+
C123 15pF
CBQ_GND R206 100 C126 100nF PB0-

CRQ R207 68 C129 100nF PR0+
C130 15pF
CRQ_GND R210 100 C133 100nF PR0-

R56 0 C136 4.7nF SOY1

Y1_INB R211 68 C137 100nF Y1+
C138 15pF
Y1_GNDB R213 100 C140 100nF Y1-

CB1_INB R214 68 C141 100nF PB1+
C142 15pF
CB1_GNDB R217 100 C145 100nF PB1-

CR1_INB R218 68 C146 100nF PR1+
C147 15pF
CR1_GNDB R219 100 C148 100nF PR1-

## FROM Tuner

SIF R212 8.2K C139 10nF MPX1
C48 1.8pF AADCVSS

AF R215 39K R216 39K CE70 + 47uF/16V MPX2
C143 15pF C144 15pF AADCVSS

KAWA Confidential

| | | | |
|---|---|---|---|
| Title | AUDIO / VIDEO IN CIRCUIT | | |
| Size C | Document Number AKAI_MT8202_27US_LVDS_V0.0 | <Designer> Checked: <Checker> | Rev 1 |
| Date: Thursday, April 13, 2006 | | Sheet 10 17 | |

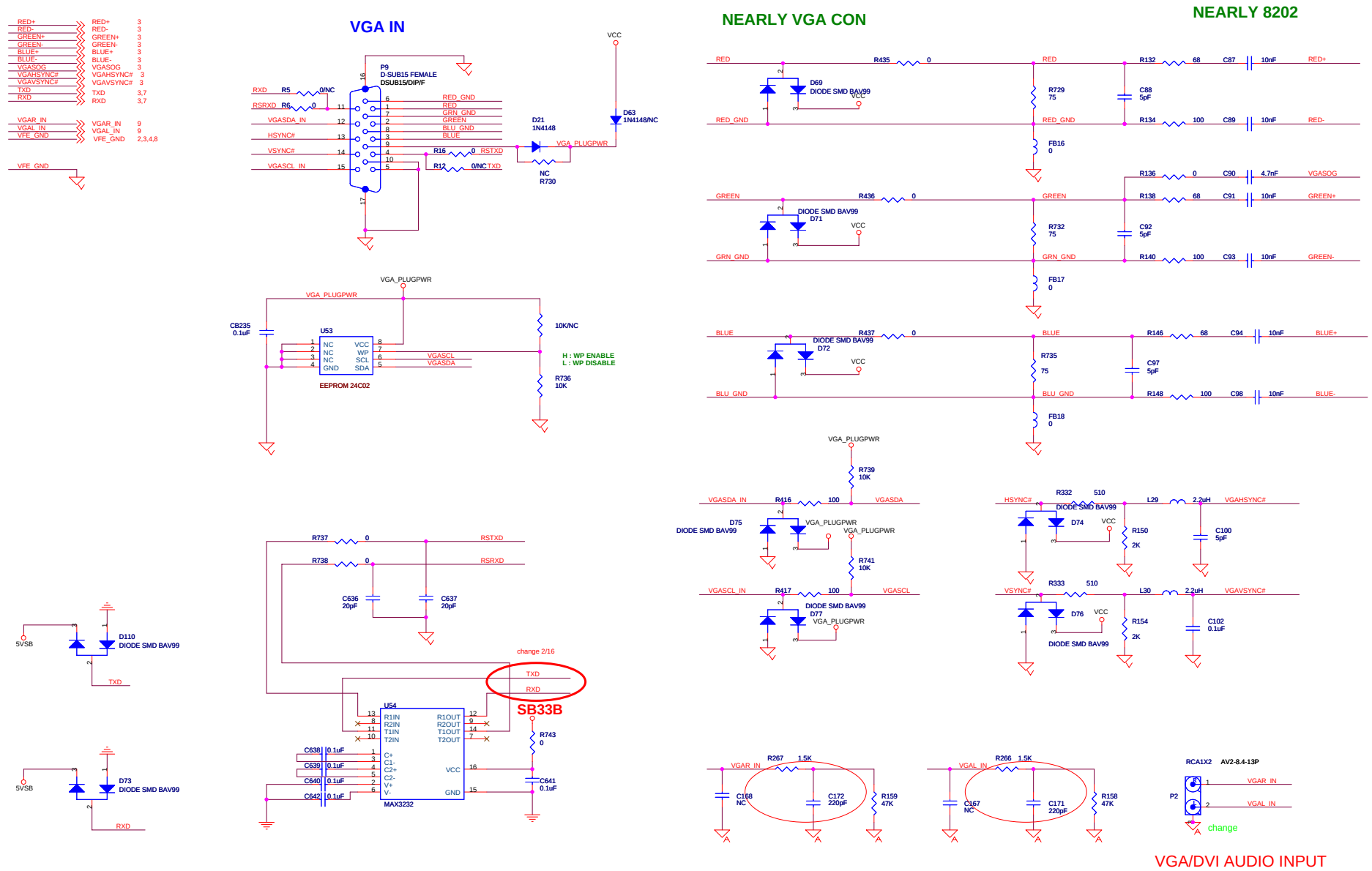


KAWA Confidential

| | | | |
|---|---|---|---|
| Title | VGA IN & PC AUDIO IN | | |
| Size C | Document Number AKAI_MT8202_27US_LVDS_V0.0 | <Designer> Checked: <Checker> | Rev 1 |
| Date: Thursday, April 13, 2006 | | Sheet 11 | 17 |

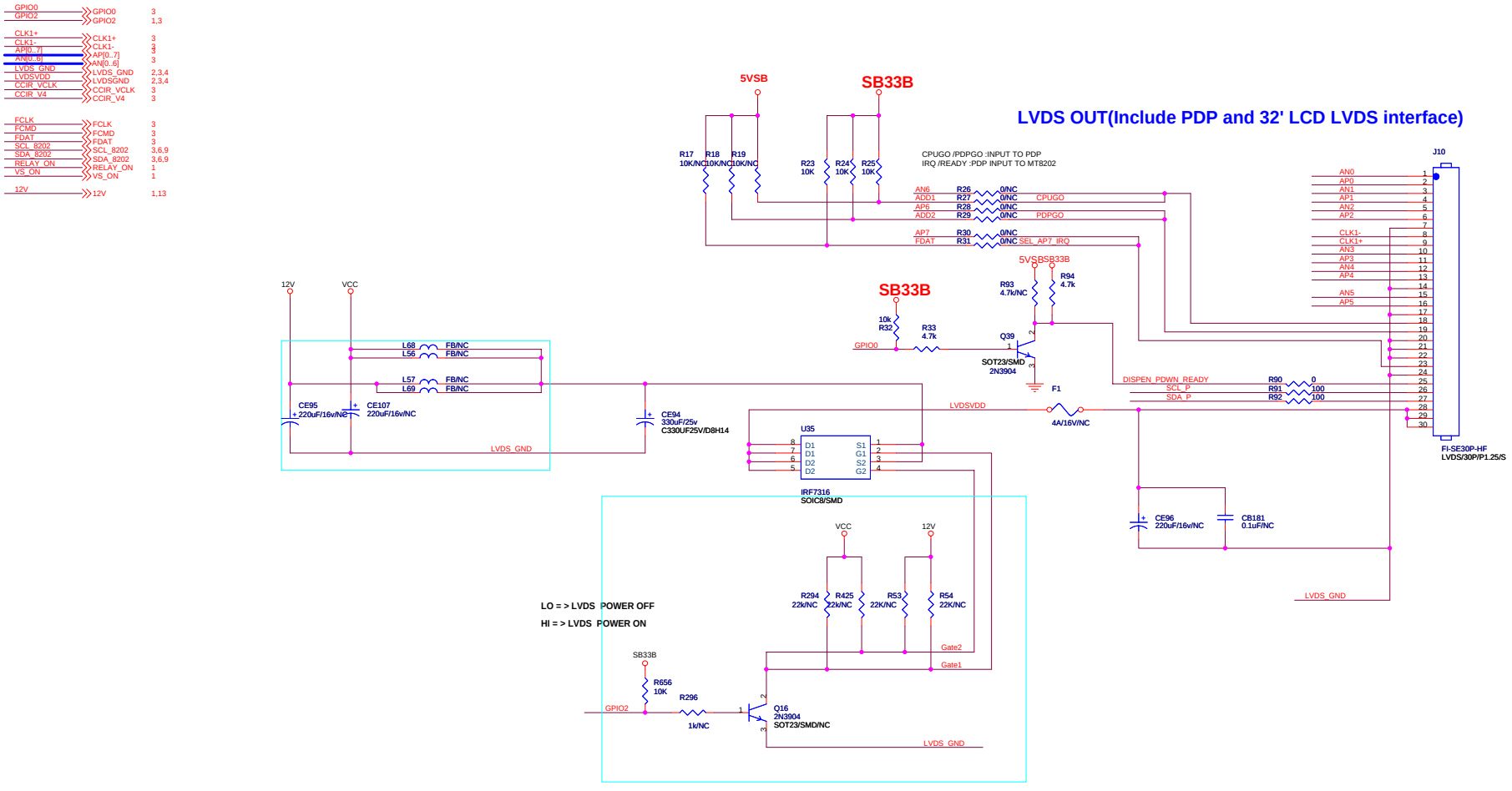


KAWA Confidential

| | | | |
|---|---|---|---|
| Title: LVDS OUT | | | |
| Size: C | Document Number: AKAI_MT8202_27US_LVDS_V0.0 | <Designer> | Rev: 1 |
| | | Checked: <Checker> | |
| Date: Thursday, April 13, 2006 | | Sheet 12 of 17 | |

| | | |
|---|---|---|
| IR | IR | 3,15 |
| GPIO10 | GPIO10 | 3 |
| GPIO12 | GPIO12 | 3 |
| GPIO13 | GPIO13 | 3 |
| GPIO14 | GPIO14 | 1,3 |
| PWM0 | PWM0 | 3 |
| PWM1 | PWM1 | 3 |
| 8202UP3_0 | 8202UP3_0 | 3 |
| GPIO14 | GPIO14 | 1,3 |
| GPIO19 | GPIO19 | 1,3 |
| VCLK | VCLK | 3 |
| F_A21 | F_A21 | 3 |
| CCIR_V2 | CCIR_V2 | 3 |
| 12V | 12V | 1,12 |

## KEYPAD

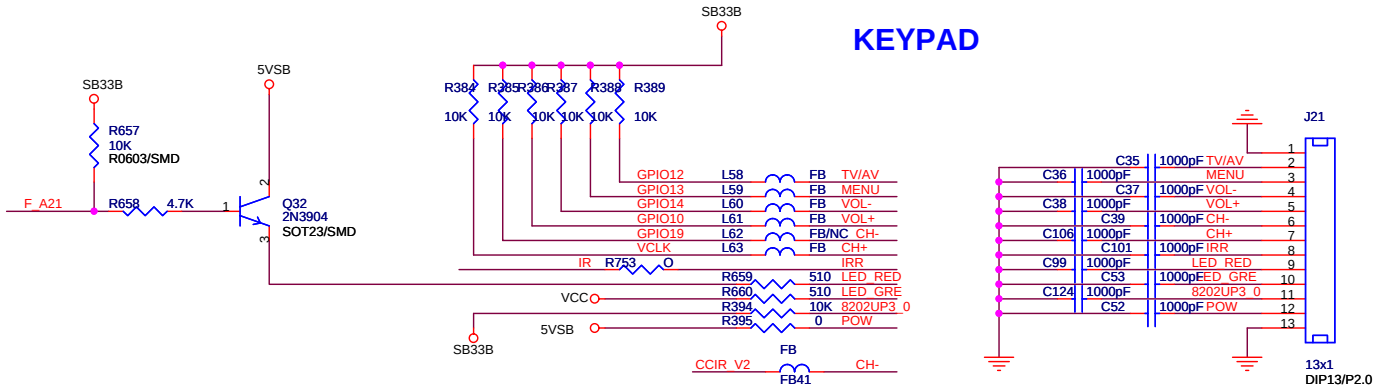


## ADC KEY & GPIO KEY KEYPAD

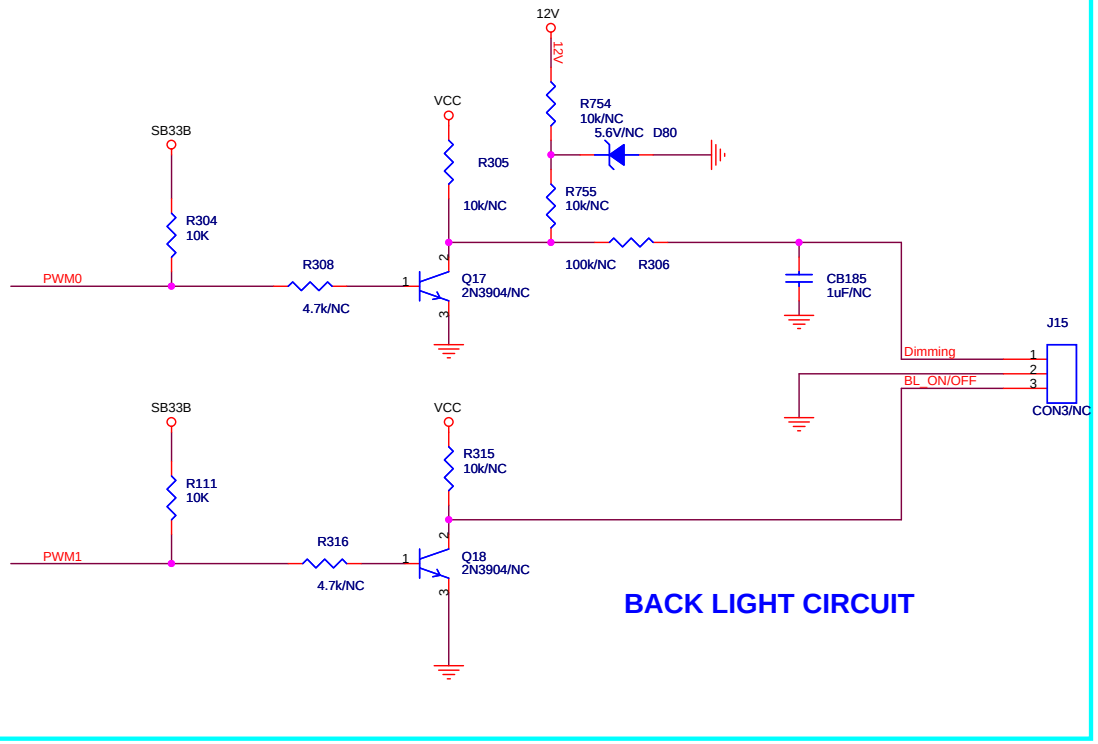


## BACK LIGHT CIRCUIT

*KAWA Confidential*

| | | | |
|---|---|---|---|
| Title: BACK LIGHT / KEYPAD | | | |
| Size: B | Document Number: AKAI_MT8202_27US_LVDS_V0.0 | <Designer> | Rev: 1 |
| | | Checked: <Checker> | |
| Date: Thursday, April 13, 2006 | | Sheet 13 of 17 | |

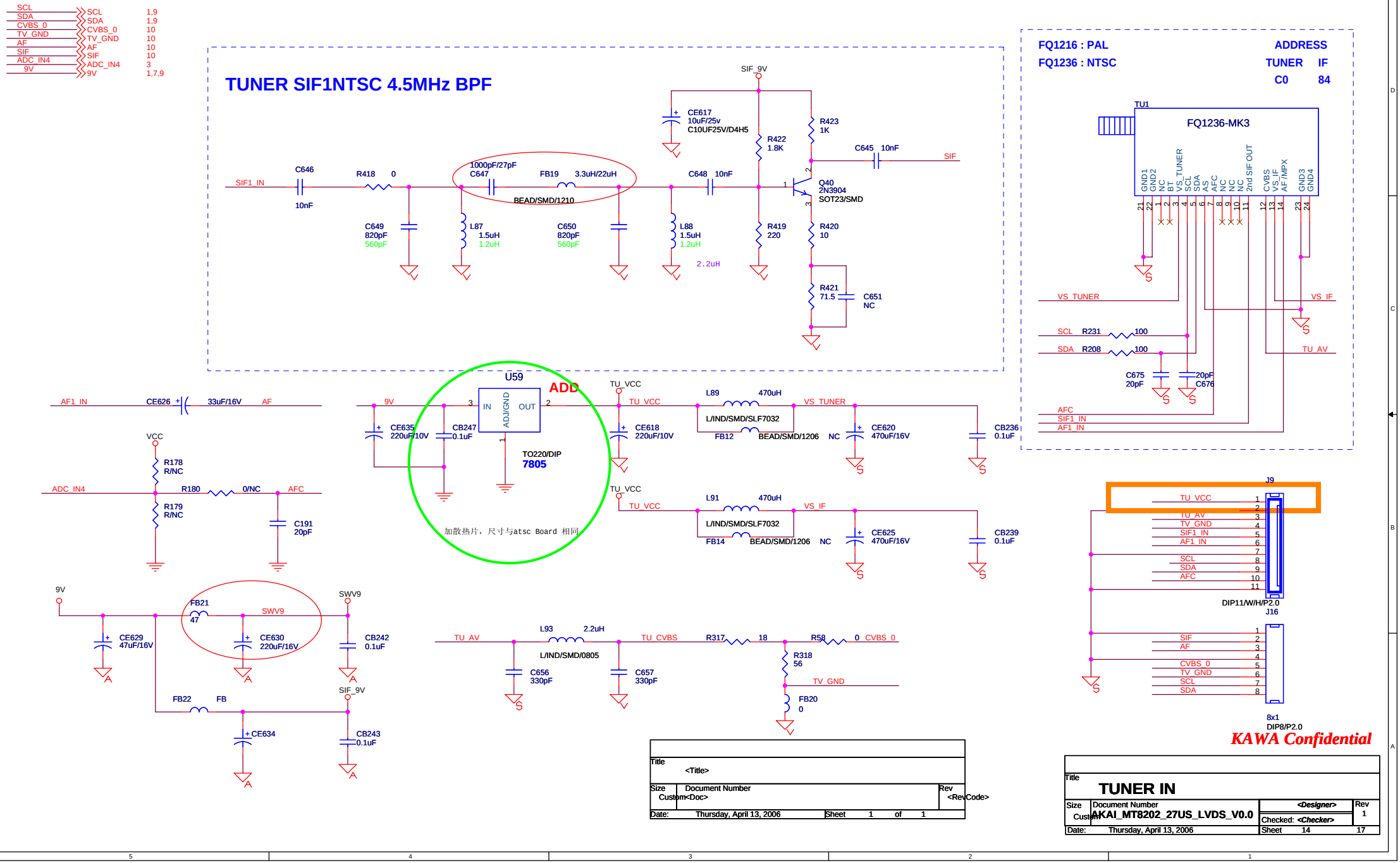
SCL 1,9
SDA 1,9
CVBS_0 10
TV_GND 10
AF 10
SIF 10
ADC_IN4 3
9V 1,7,9
TUNER SIF1NTSC 4.5MHz BPF
SIF_9V
CE617 10uF/25v C10UF25V/D4H5
R423 1K
R422 1.8K
C645 10nF
SIF
SIF1_IN
C646 10nF
R418 0
1000pF/27pF C647
FB19 3.3uH/22uH
BEAD/SMD/1210
C648 10nF
Q40 2N3904 SOT23/SMD
C649 820pF 560pF
L87 1.5uH 1.2uH
C650 820pF 560pF
L88 1.5uH 1.2uH
2.2uH
R419 220
R420 10
R421 71.5
C651 NC
FQ1216 : PAL
FQ1236 : NTSC
ADDRESS
TUNER IF
C0 84
TU1
FQ1236-MK3
GND1 GND2 NC BT VS_TUNER SCL SDA AS AFC NC NC NC 2nd SIF OUT CVBS VS_IF AF/MPX GND3 GND4
VS_TUNER
VS_IF
SCL R231 100
SDA R208 100
TU_AV
C675 20pF
C676 20pF
AFC
SIF1_IN
AF1_IN
AF1_IN CE626 33uF/16V AF
VCC
R178 R/NC
ADC_IN4 R180 0/NC AFC
R179 R/NC
C191 20pF
U59
ADD
9V
IN ADJ/GND OUT
CE635 220uF/10V
CB247 0.1uF
TO220/DIP
7805
加散热片，尺寸与atsc Board 相同
TU_VCC
CE618 220uF/10V
L89 470uH
L/IND/SMD/SLF7032
VS_TUNER
FB12 BEAD/SMD/1206 NC
CE620 470uF/16V
CB236 0.1uF
L91 470uH
VS_IF
FB14 BEAD/SMD/1206 NC
CE625 470uF/16V
CB239 0.1uF
9V
FB21 47
SWV9
CE629 47uF/16V
CE630 220uF/16V
CB242 0.1uF
FB22 FB
SIF_9V
CE634
CB243 0.1uF
TU_AV
L93 2.2uH
L/IND/SMD/0805
TU_CVBS
R317 18
R58 0 CVBS_0
C656 330pF
C657 330pF
R318 56
TV_GND
FB20 0
J9
TU_VCC
TU_AV
TV_GND
SIF1_IN
AF1_IN
SCL
SDA
AFC
DIP11/W/H/P2.0
J16
SIF
AF
CVBS_0
TV_GND
SCL
SDA
8x1
DIP8/P2.0
KAWA Confidential
Title
<Title>
Size Custom
Document Number <Doc>
Rev <RevCode>
Date: Thursday, April 13, 2006
Sheet 1 of 1
Title
TUNER IN
Size Custom
Document Number AKAI_MT8202_27US_LVDS_V0.0
<Designer>
Checked: <Checker>
Rev 1
Date: Thursday, April 13, 2006
Sheet 14 17

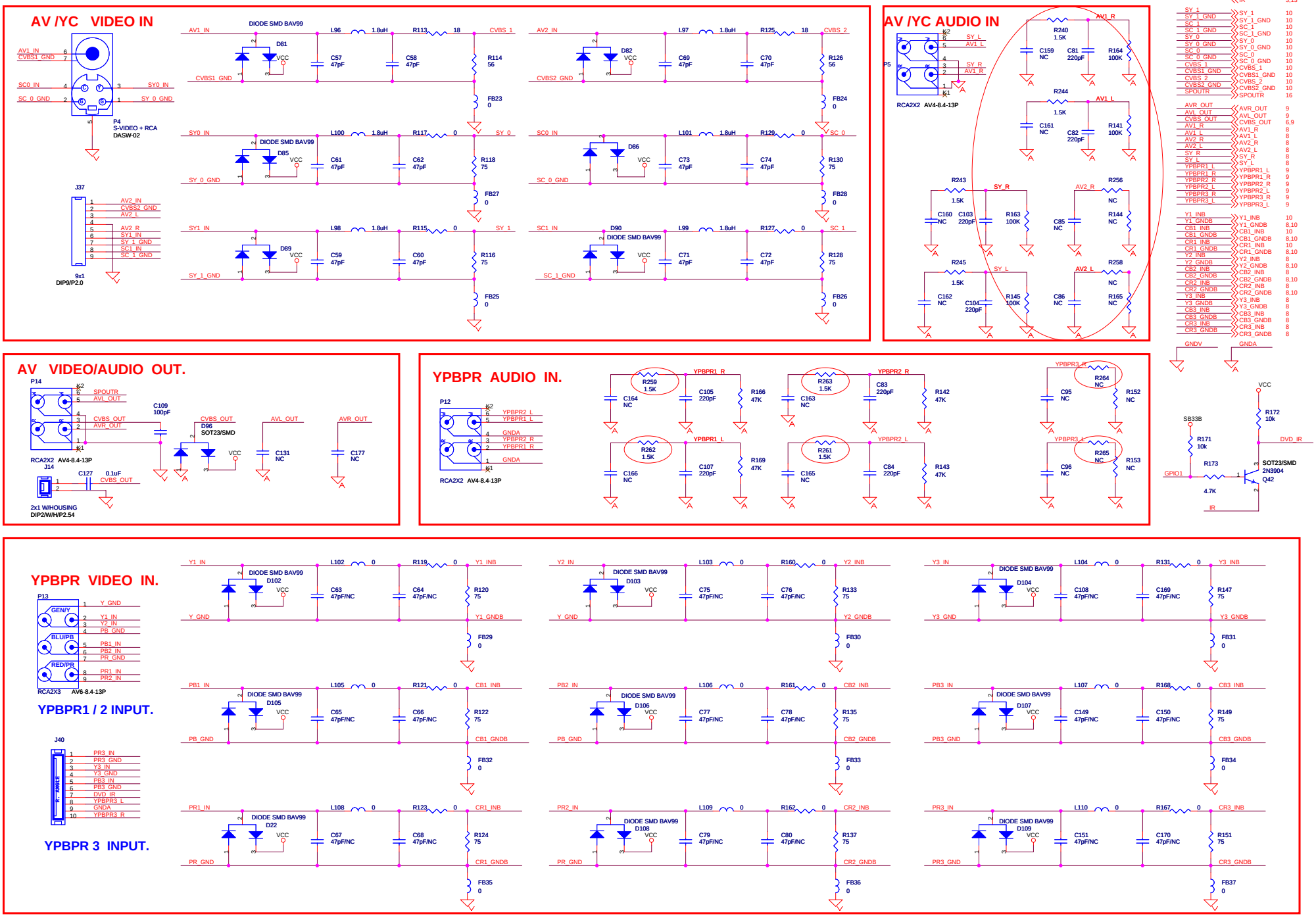




KAWA Confidential

| | | | |
|---|---|---|---|
| Title | AV IN | | |
| Size C | Document Number AKAI_MT8202_27US_LVDS_V0.0 | <Designer> | Rev 1 |
| | | Checked: <Checker> | |
| Date: Thursday, April 13, 2006 | | Sheet 15 | 17 |

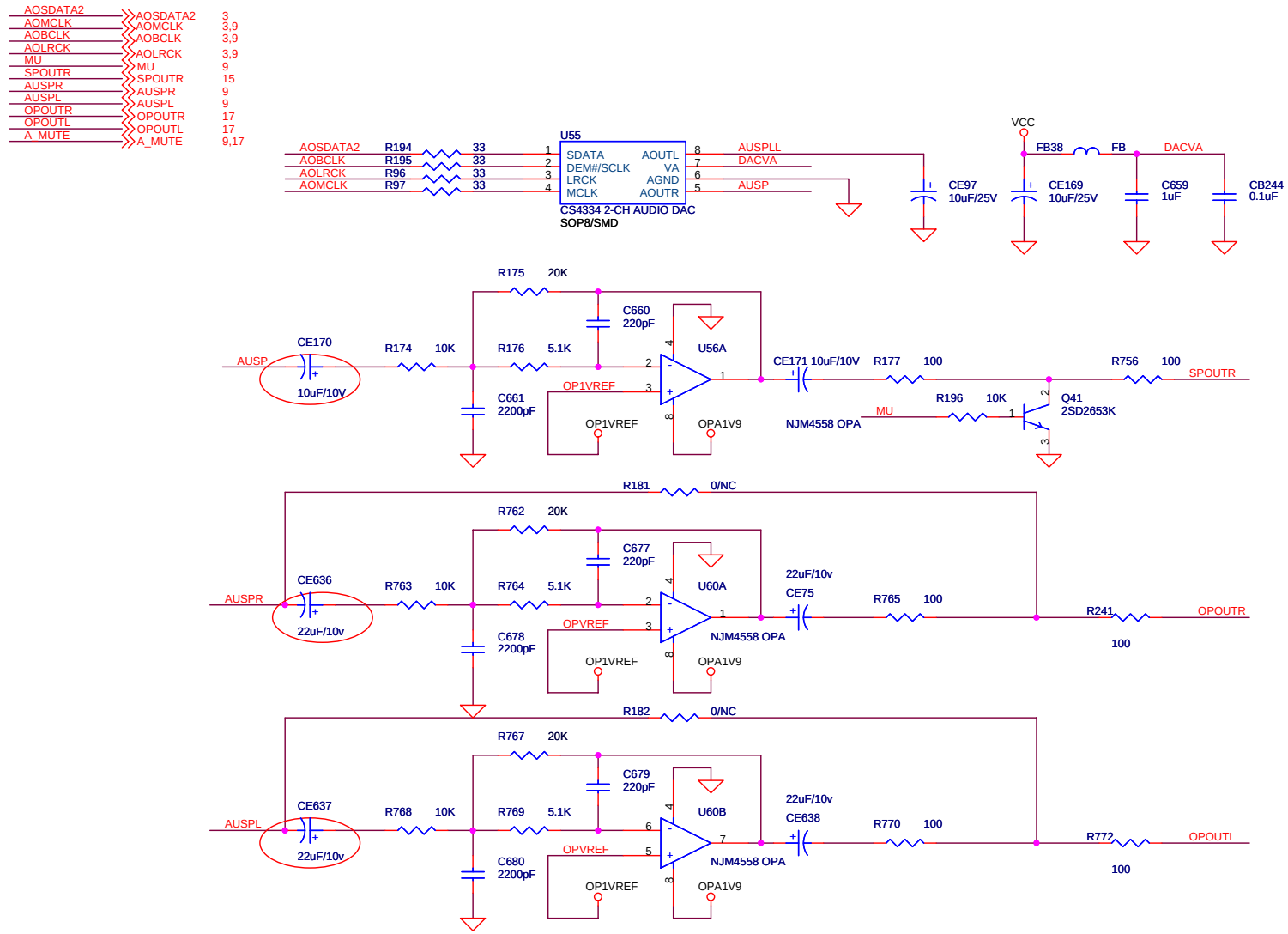


## GPIO DECRIPTION

UP3_4 : SW SCL
UP3_5 : SW SDA
ERO0/UP3_0 :KEYPAD POWER
ERO1/UP3_1 : MAIN POWER SWITCH
VCLK : KEPAD CH+
GPIO19 : KEPAD CH-
DE/GPIO : DVD IR
CCIR_CLK : PDP USE
CCIR_V4 : PDP USE
GPIO0 : PDP USE
GPIO1 : NO USE
GPIO2 : LVDS POWER SW
GPIO3 : DTV POWER CONTROL
GPIO4 : EEPROM WRITE PROTECT
GPIO5/TXD : 2nd UART FOR MT5351
GPIO6/RXD : 2nd UART FOR MT5351
GPIO7 : AUDIO BYPASS MUTE CONTROL
GPIO8 : SPEAKER SWITCH
GPIO9 : AUDIO MUTE
GPIO10 : Indicates active video at HDMI port
GPIO11 : DVD POWER CONTROL
GPIO12 : AV SWITCH
GPIO13 : HDMI Hot Plug Detect
GPIO14 : NO USE
GPIO[15..18] : FOR DVD CONTROL
GPIO/PWM0 : DIMMING
GPIO/PWM1 : BACKLIGHT ON/OFF
OUT_27Mhz/GPIO : HDMI CRYSTAL
SDA1 : TO MT5351 I/F REQUEST
SCL1 : TO MT5351 I/F READY
F_A21 : KEYPAD(LED RED)
ADCIN0 : KEYPAD
ADCIN3:PDP 5VD DETECT
ADCIN4:FOR TUNER AFC

CCIR_V[0-3] : KEYPAD
CCIR_V5 : AUDIO SWITCH
CCIR_V6 : RESET DTV
CCIR_V7 : YPBPR VIDEO SWITCH

KAWA Confidential

| | | | |
|---|---|---|---|
| Title: SUB WOOFER | | | |
| Size: B | Document Number: AKAI_MT8202_27US_LVDS_V0.0 | <Designer> | Rev: 1 |
| | | Checked: <Checker> | |
| Date: Thursday, April 13, 2006 | | Sheet 16 | 17 |

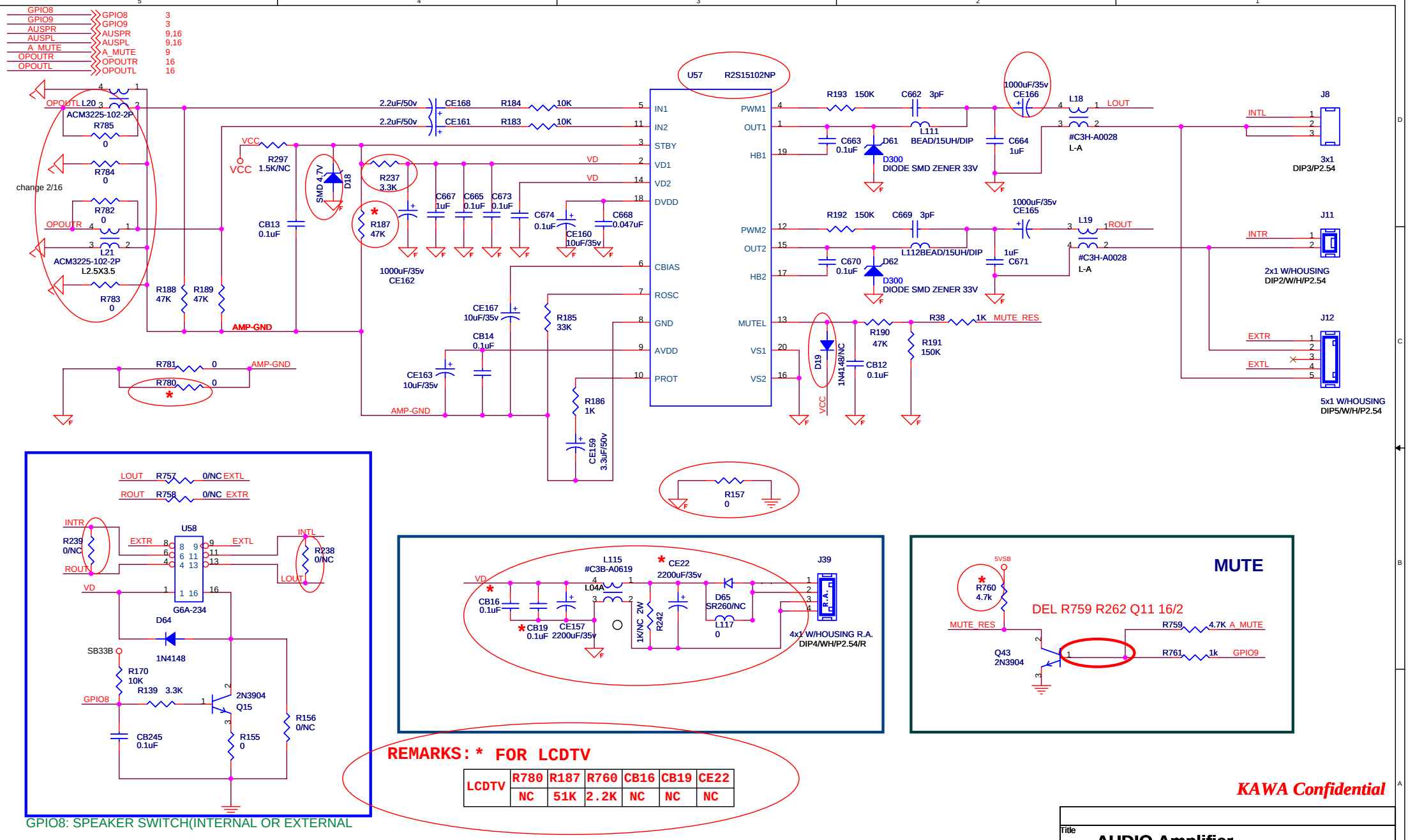


GPIO8: SPEAKER SWITCH(INTERNAL OR EXTERNAL

**REMARKS: * FOR LCDTV**

| | | | | | | |
|---|---|---|---|---|---|---|
| LCDTV | R780 | R187 | R760 | CB16 | CB19 | CE22 |
| | NC | 51K | 2.2K | NC | NC | NC |

KAWA Confidential

| | | | |
|---|---|---|---|
| Title: AUDIO Amplifier | | | |
| Size: B | Document Number: AKAI_MT8202_27US_LVDS_V0.0 | <Designer> | Rev: 1 |
| | | Checked: <Checker> | |
| Date: Saturday, April 22, 2006 | | Sheet 17 | 17 |

# MT5111 / MT5351 REFERENCE DESIGN - 4 LAYERS

| Rev | History | P# | DATE |
|---|---|---|---|
| RA-V1 | INITIAL VERSION | | 2005/06/15 |
| RA-V2 | ADDED AUDIO SWITCH / REFINE POWER CIRCUIT | | 2005/07/14 |
| | | | |
| | | | |
| | | | |


01. INDEX AND INTERFACE
02. POWER
03. TUNER
04. MT5111 ASIC
05. MT5351 ASIC
06. MT5351 PERIPHERAL
07. DDR MEMORY
08. NOR FLASH / JTAG / UART


**NS : NON-STUFF**

| NAME | TYPE | DEVICE |
|---|---|---|
| +12V | POWER +12V | POWER SUPPLY |
| +5V | POWER +5V | POWER SUPPLY |
| +5V_tuner | POWER +5V | TUNER POWER |
| DV33_DM | POWER +3V3 | MT5111 POWER |
| DV18 | POWER +1V8 | MT5111 POWER |
| DV33 | POWER +3V3 | MT5351 POWER |
| AV33 | POWER +3V3 | MT5351 ANALOG POWER |
| DV25 | POWER +2V5 | MT5351 DDR POWER |
| DV12 | POWER +1V2 | MT5351 POWER |
| GND | GROUND | GROUND |

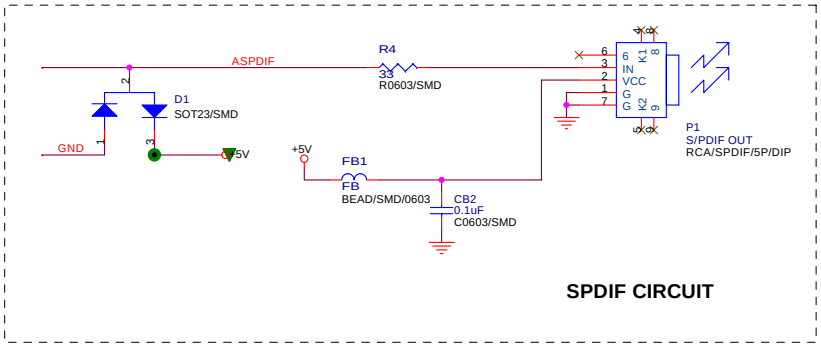


SPDIF CIRCUIT

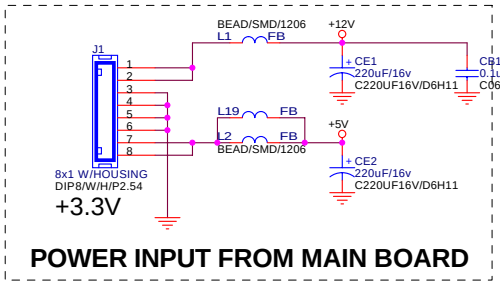


POWER INPUT FROM MAIN BOARD

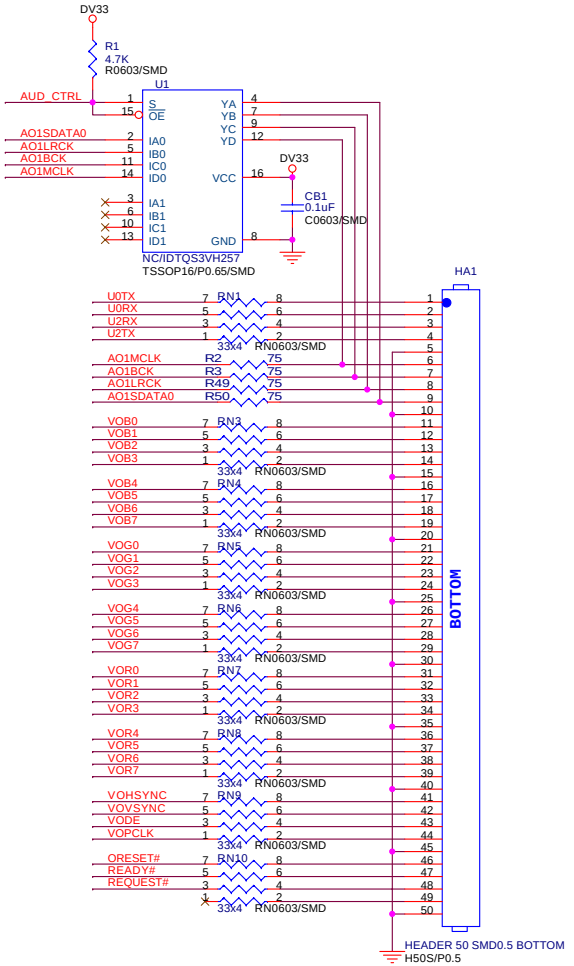


DIGITAL OUTPUT

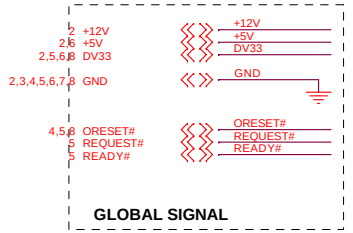


GLOBAL SIGNAL

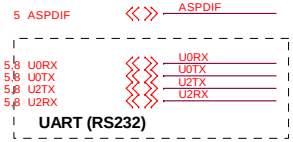


UART (RS232)

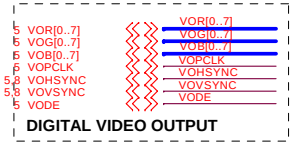


DIGITAL VIDEO OUTPUT

DIGITAL AUDIO INTERFACE

MediaTek Confidential

Title: INDEX
Size: Custom | Document Number: MT5351RA-V2 | Rev: 1
Date: Monday, February 20, 2006 | Sheet 1 of 8
TwinSon Chan

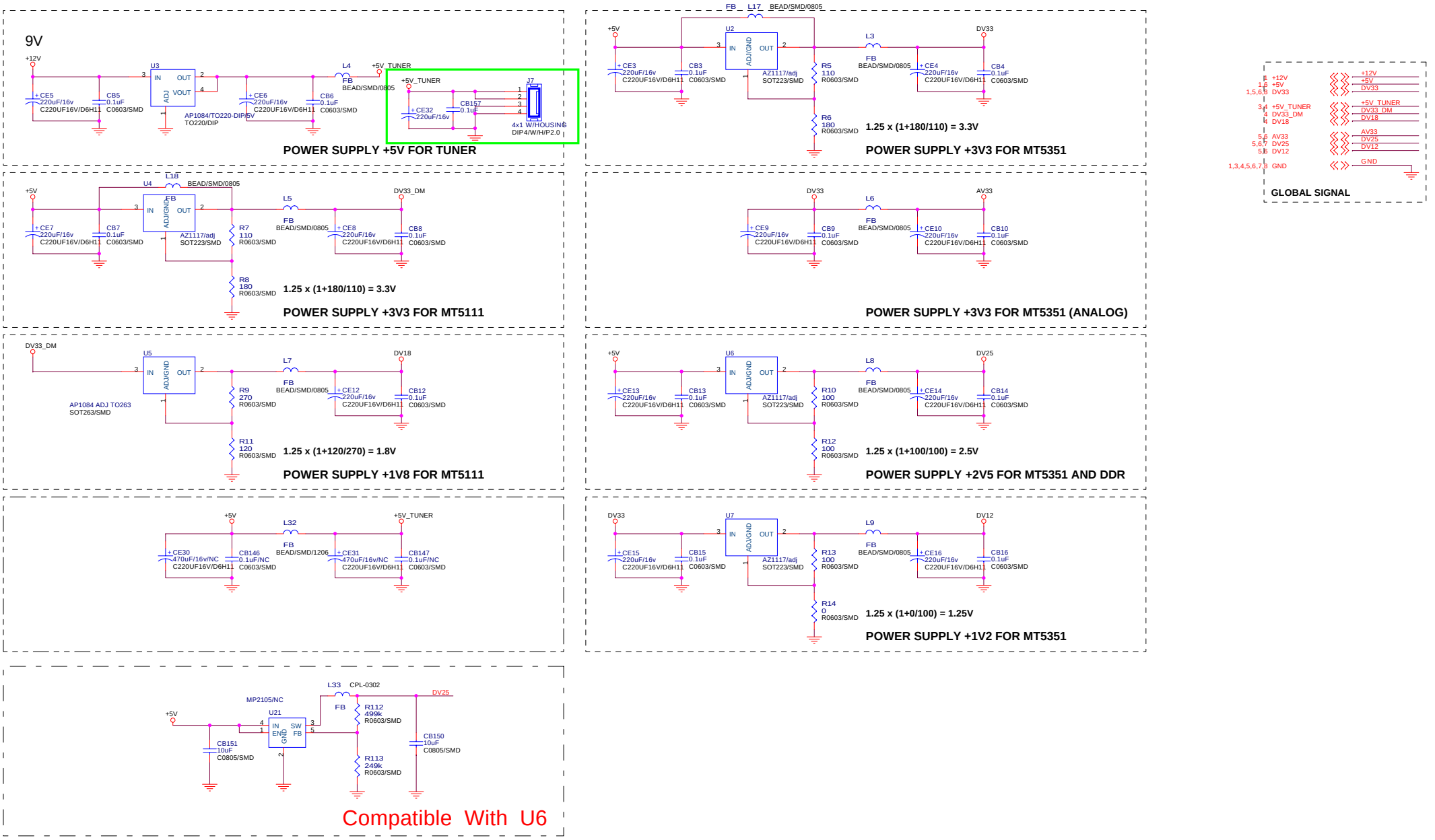


MediaTek Confidential

| | | | |
|---|---|---|---|
| Title: POWER | | | |
| Size: Custom | Document Number: MT5351RA-V2 | TwinSon Chan | Rev: 1 |
| Date: Monday, February 20, 2006 | Sheet 2 of 8 | | |

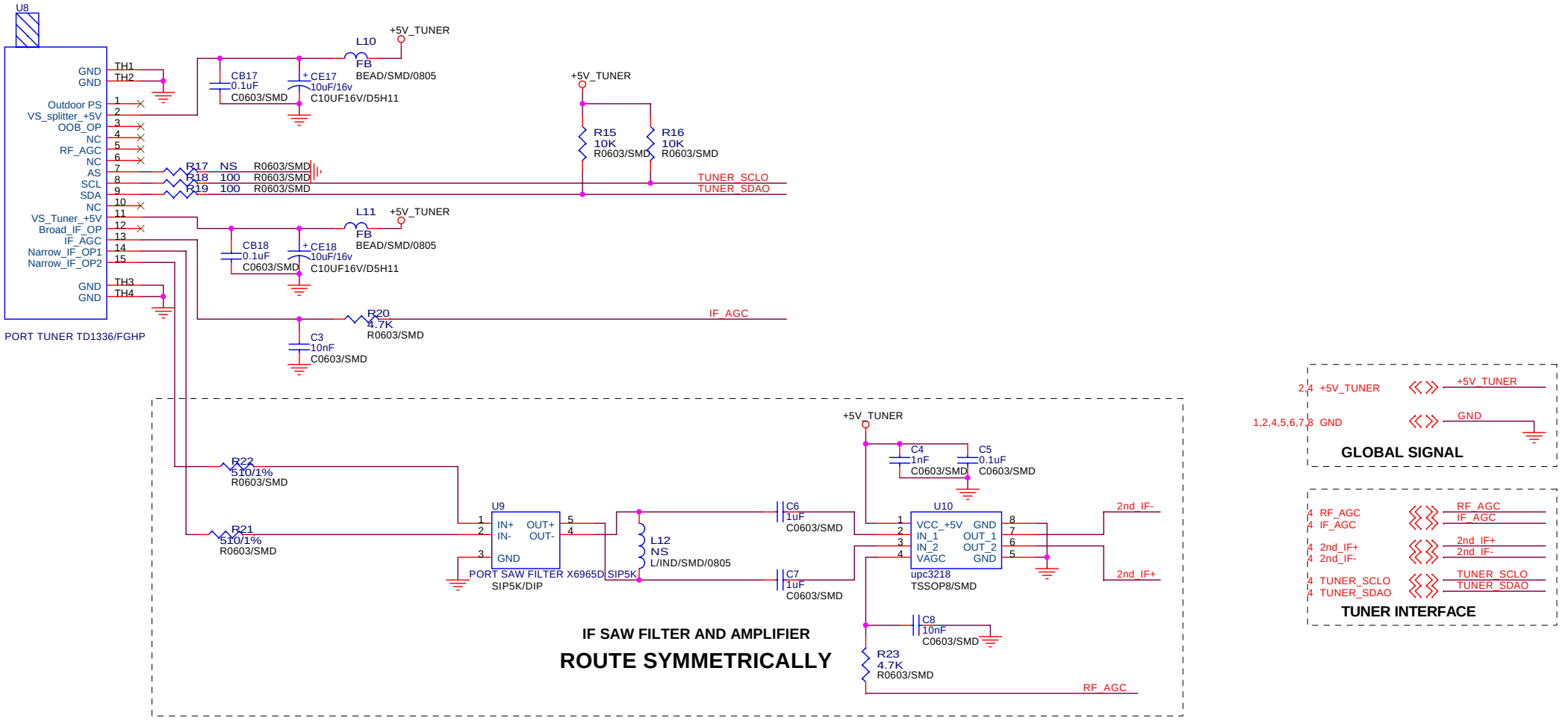


MediaTek Confidential

| | | | |
|---|---|---|---|
| Title: TUNER | | | |
| Size: Custom | Document Number: MT5351RA-V2 | TwinSon Chan | Rev: 1 |
| Date: Monday, February 20, 2006 | | Sheet 3 of 8 | |

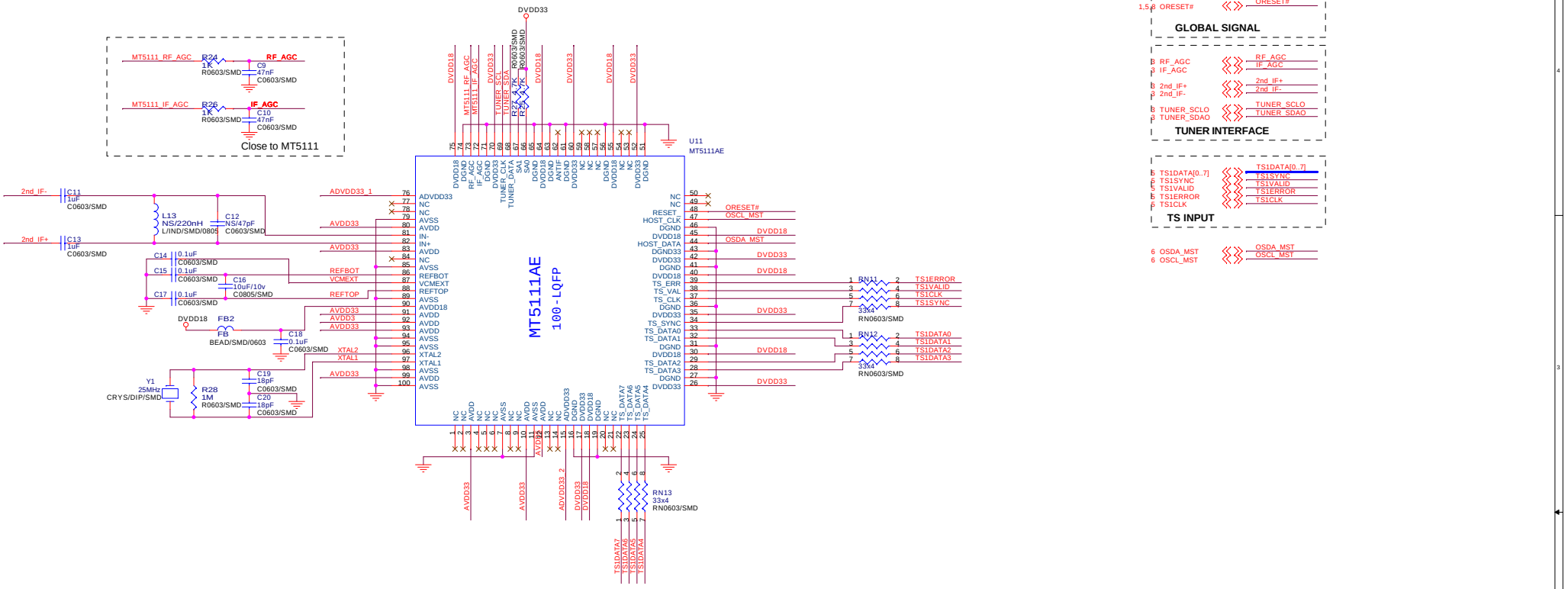


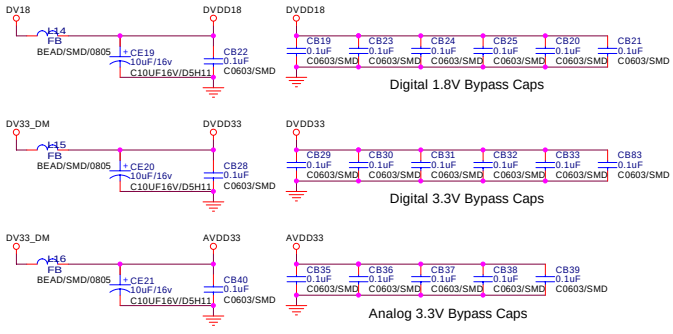


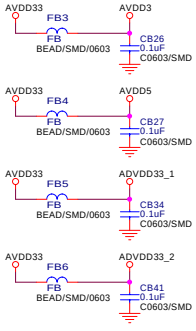


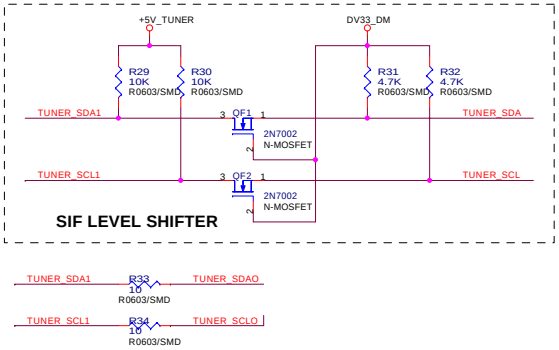


MediaTek Confidential

| | | | |
|---|---|---|---|
| Title: MT5111 ASIC | | | |
| Size: C | Document Number: MT5351RA-V2 | TwinSon Chan | Rev: 1 |
| Date: Monday, February 20, 2006 | | Sheet 4 of 8 | |

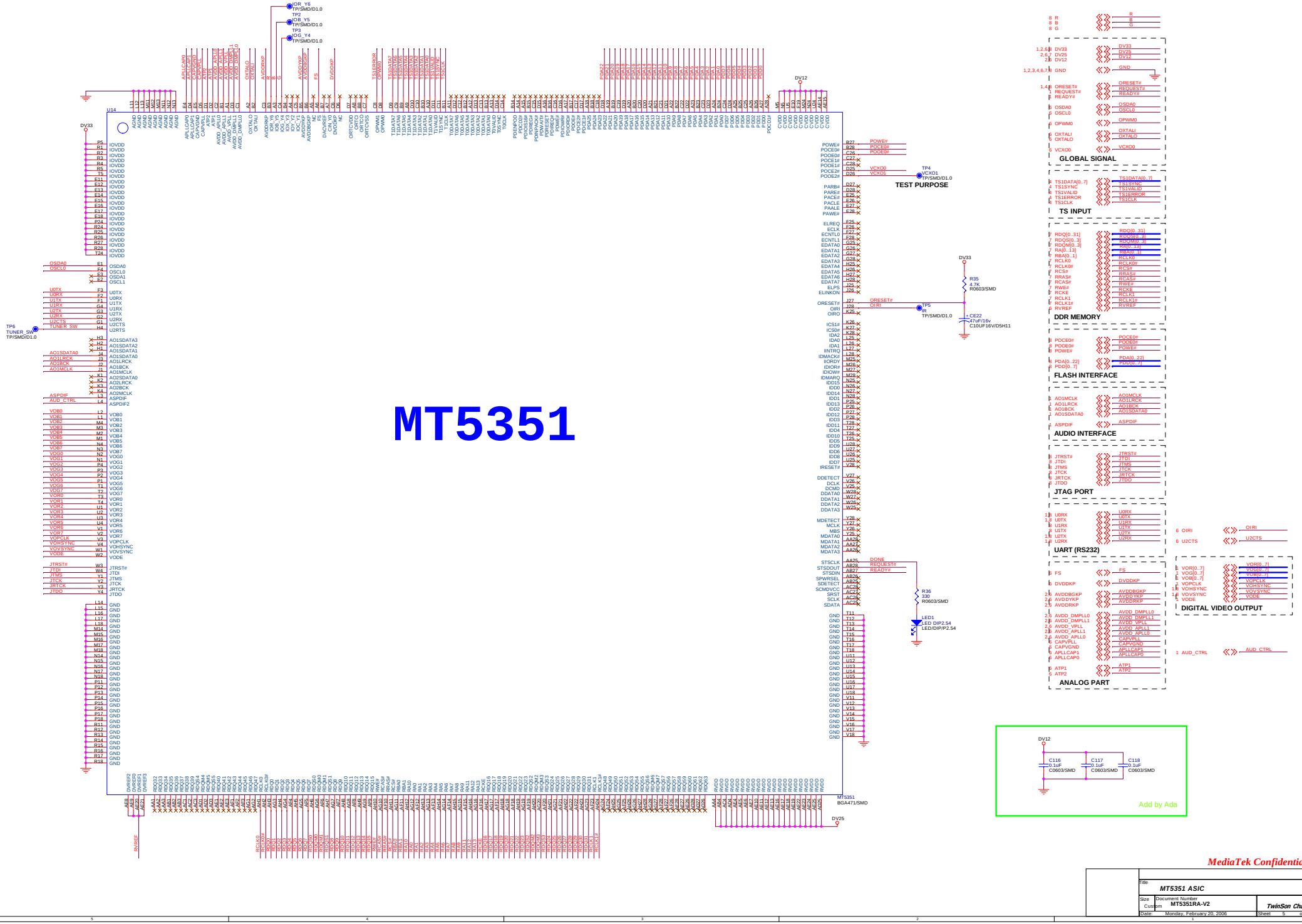


MediaTek Confidential

| | | | |
|---|---|---|---|
| Title: MT5351 ASIC | | | |
| Size: Custom | Document Number: MT5351RA-V2 | TwinSon Chan | Rev: 1 |
| Date: Monday, February 20, 2006 | Sheet 5 of 8 | | |

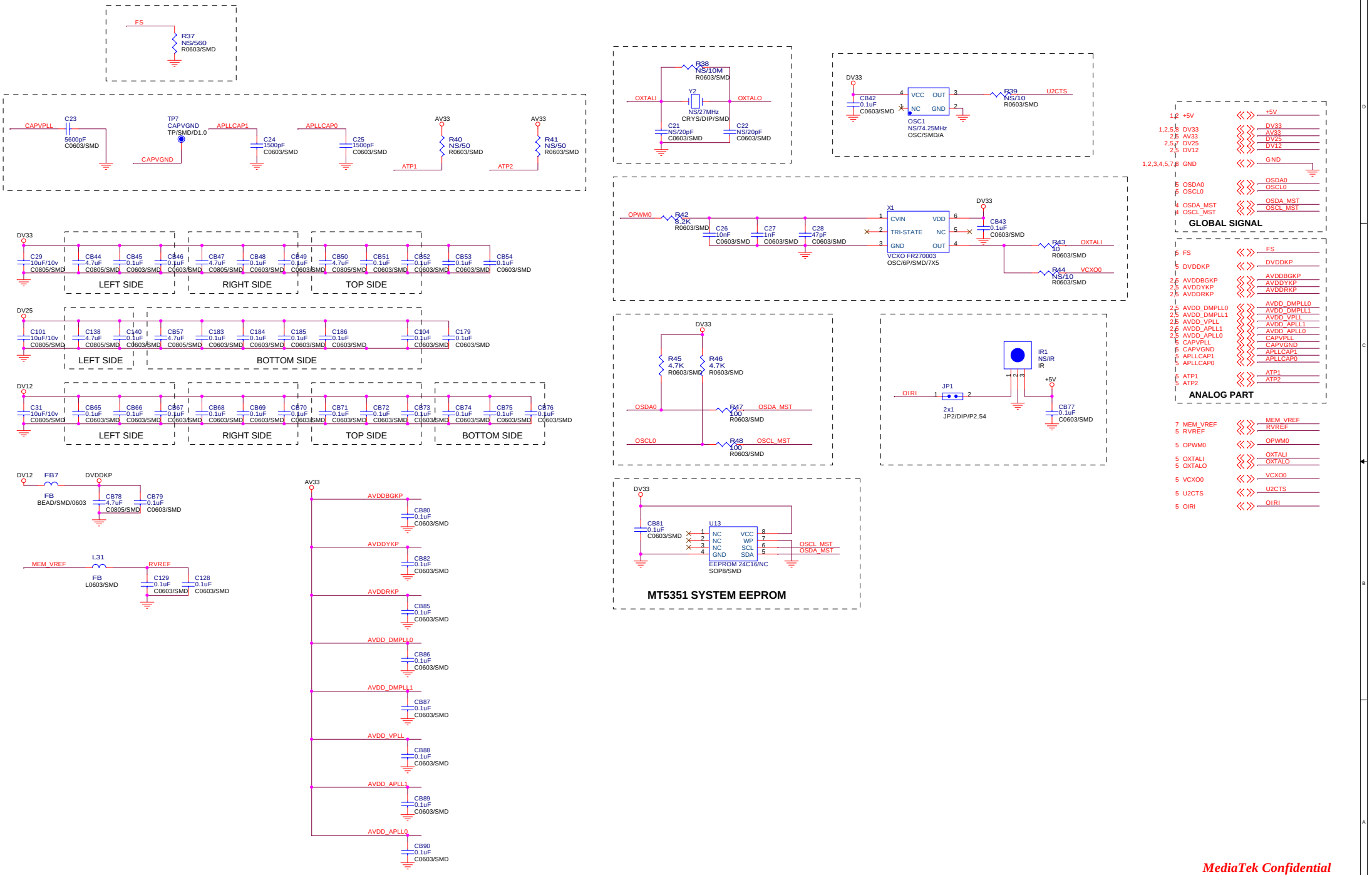


MediaTek Confidential

| | | | |
|---|---|---|---|
| Title: MT5351 PERIPHERAL | | | |
| Size: Custom | Document Number: MT5351RA-V2 | TwinSon Chan | Rev: 1 |
| Date: Monday, February 20, 2006 | | Sheet 6 of 8 | |

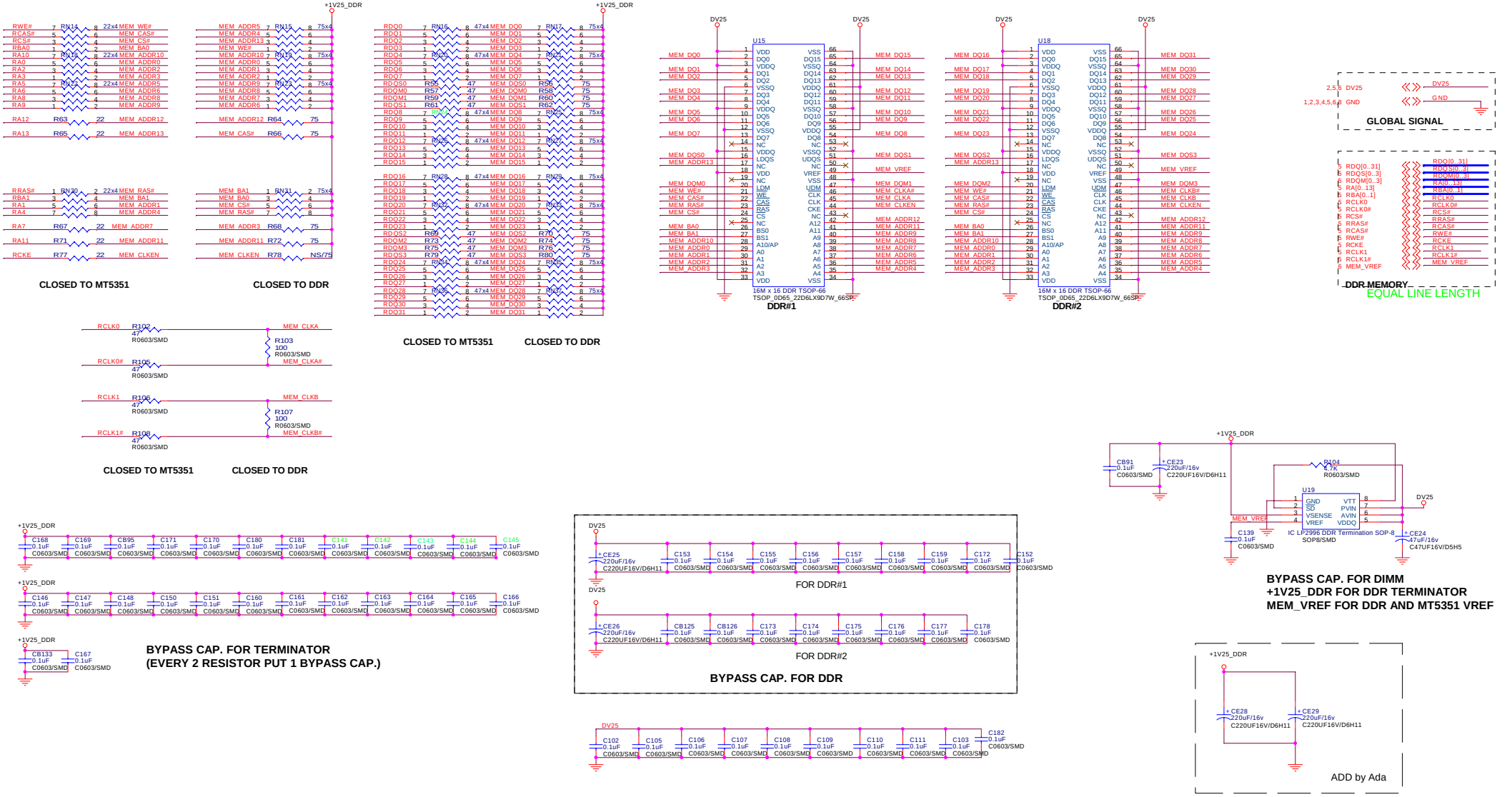


MediaTek Confidential

| | | | |
|---|---|---|---|
| Title: DDR MEMORY | | | |
| Size: Custom | Document Number: MT5351RA-V2 | TwinSon Chan | Rev: 1 |
| Date: Monday, February 20, 2006 | | Sheet 7 of 8 | |

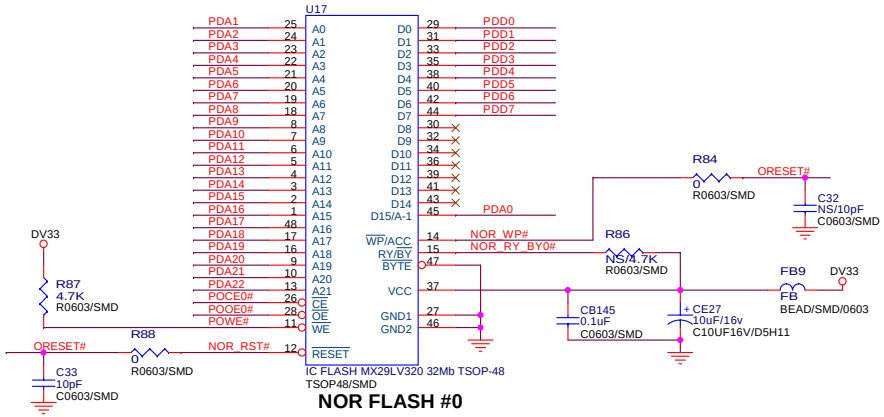


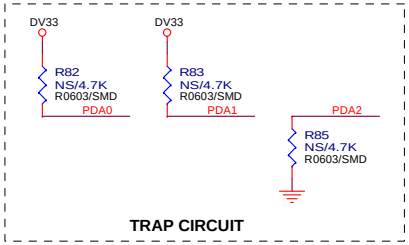


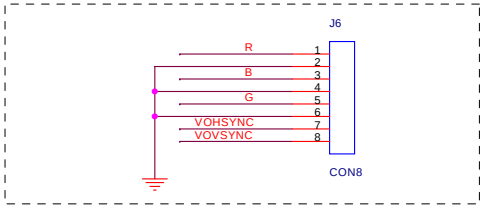


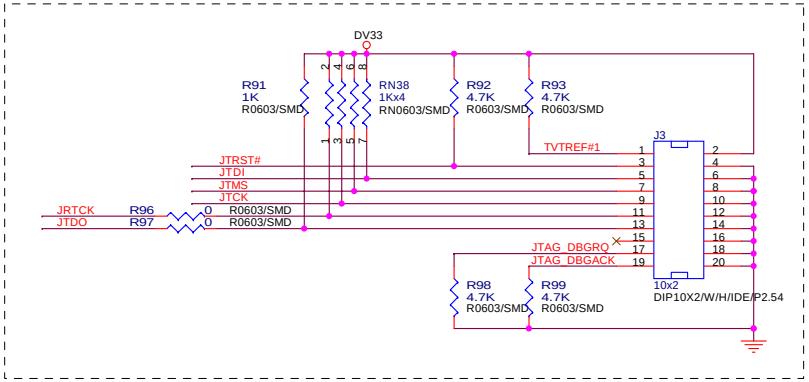


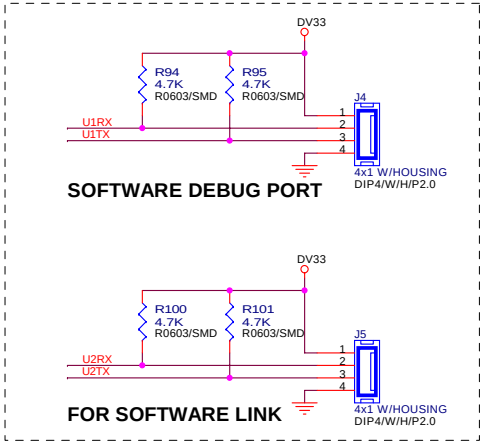


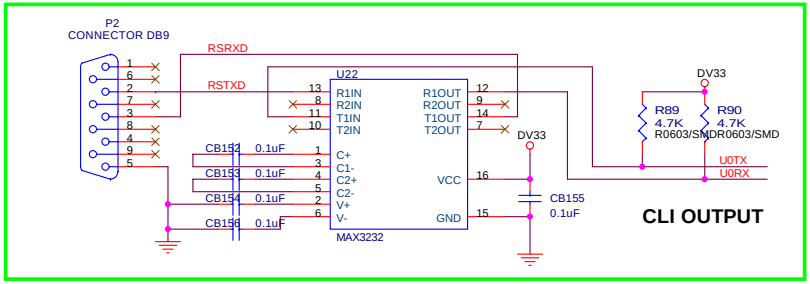


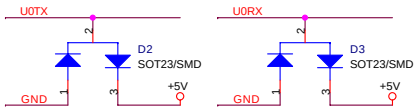

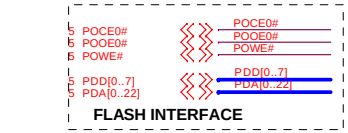

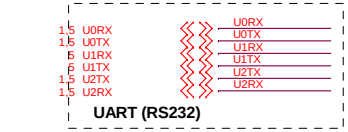

MediaTek Confidential

| | | |
|---|---|---|
| Title | NOR FLASH / JTAG / UART | |
| Size: Custom | Document Number: MT5351RA-V2 | Rev: 1 |
| Date: Monday, February 20, 2006 | TwinSon Chan | Sheet 8 of 8 |

# Main IC Specifications

- M13S128168A (ESMT)
  2M x 16 Bit x 4 Banks Double Data Rate SDRAW

- MT5111CE
  Single-Chip HDTV/CATV Demodulator

- MT5351
  MT5351 is a DTV Backend Decoder SOC which support flexible transport demux, HD MPEG-2 video decoder, MPEG1,2, MP3, AC3 audio decoder, HDTV encoder. MT5351 is powered by ARM 926EJ with 16K I-Cache and 16K D-Cache. It can support 64Mb to 1Gb DDR DRAM devices with configurable 32/64 bit data bus interface.

- MT8202
  MT8202G is a highly integrated Single-Chip for LCD TV supporting video input and output format up to HDTV. It includes 3D comb filter TV decoder to retrieve the best image from popular composite signals.

- MT8293
  HDMI PanelLink Cinema Receiver

- R2S15102NP
  Digital Power Amplifier R2S15102NP

- WM8776
  24-bit, 192kHz Stereo CODEC with 5 Channel I/P Multiplexer

To :
Date : 2005.09.09

*CPT TFT-LCD*

# CLAA370WA02

**ACCEPTED BY：**

**TENTATIVE**

| APPROVED BY | CHECKED BY | PREPARED BY |
|---|---|---|
| | | **TFT-LCD Product Planning Management General Division** |

# RECORD OF REVISIONS

| Revision No. | Date | Description | Page |
|---|---|---|---|
| Ver 1.0 | 2005/09/09 | Preliminary specification first issued. | -- |
| | | | |
| | | | |
| | | | |
| | | | |
| | | | |
| | | | |
| | | | |
| | | | |
| | | | |
| | | | |
| | | | |
| | | | |
| | | | |
| | | | |
| | | | |
| | | | |
| | | | |
| | | | |
| | | | |
| | | | |
| | | | |
| | | | |
| | | | |

# CONTENTS


**1. OVERVIEW** ..... **3**
- 1.1 General Information
- 1.2 Mechanical Information

**2. ABSOLUTE MAXIMUM RATINGS** ..... **4**

**3. ELECTRICAL CHARACTERISTICS** ..... **5**
- 3.1 TFT-LCD module
- 3.2 Power Sequence
- 3-3 Backlight Inverter Unit

**4. INTERFACE PIN CONNECTION** ..... **10**
- 4.1TFT LCD Module
- 4-2 LVDS Data Mapping
- 4.3 Inverter

**5. INTERFACE TIMING(DE only mode)** ..... **13**
- 5.1 Timing Specification
- 5.2 Timing Chart
- 5.3 Color data assignment

**6. BLOCK DIAGRAM** ..... **15**
- 6.1 TFT LCD Module
- 6.2 Backlight Unit

**7. MECHANICAL SPECIFICATION** ..... **16**
- 7.1 Front side
- 7.2 Rear side

**8.OPTICAL CHARACTERISTICS** ..... **18**

**9.RELIABILITY TEST CONDITIONS** ..... **23**
- 9.1 Temperature and Humidity
- 9.2 Shock & Vibration
- 9.3 Judgment standard

**10. HANDLING PRECAUTIONS FOR TFT-LCD MODULE** ..... **24**
- 12.1 Assembly Precautions
- 12.2 Operating Precautions
- 12.3 Precautions With Electrostatics
- 12.4 Storage Precautions
- 12.5 Safety Precautions
- 12.6 Others

# 1. OVERVIEW

CLAA370WA02 is 37” color (94.03cm) TFT-LCD (Thin Film Transistor Liquid Crystal Display) module composed of LCD panel, LVDS driver ICs, control circuit and backlight. By applying 8 bit digital data, 1366*768, 16.7 million-color images are displayed on the 37” diagonal screen. Inverter for backlight is included in this module. General specification are summarized in the following table:

## 1.1 GENERAL INFORMATION

| ITEM | SPECIFICATION | UNIT |
|---|---|---|
| Display Area | 819.6(H) × 460.8(V) (37.0 inch diagonal) | mm |
| Number of Pixels | 1366(H) × 768(V) | 16:9 |
| Pixel Pitch | 0.6(H) × 0.6(V) | mm |
| Bezel Opening Area | 826.6 x 467.8 | mm |
| Color Pixel Arrangement | RGB Vertical Strip | |
| Display Mode | Normally Black | |
| Number of Colors | 16.7M (8bits) | color |
| Surface Treatment | Hard coating: 2H,<br>Anti-reflective coating <less than 3% reflection. | |
| Total Module Power | 140 (B/L with inverter 130W at 5.0mA) | W |

## 1.2 MECHANICAL INFORMATION

| ITEM | | | MIN | TYP. | MAX. | UNIT |
|---|---|---|---|---|---|---|
| Module outline dimension | Horizontal(H) | | 876.0 | 877.0 | 878.0 | mm |
| | Vertical(V) | | 515.8 | 516.8 | 517.8 | mm |
| | Depth(D) | without inverter | 44.3 | 45.3 | 46.3 | mm |
| | | with inverter | 54.1 | 55.1 | 56.1 | mm |
| Module Weight | | | - | 8600 | - | g |

## 2. ABSOLUTE MAXIMUM RATINGS

The following are maximun values which, if exceeded, may cause faulty operation or damage to the panel module.

| ITEM | SYMBOL | MIN. | MAX. | UNIT | REMARK |
|---|---|---|---|---|---|
| Power Supply Voltage For LCD | VCC | -0.3 | 14.0 | V | |
| Input voltage of inverter | VBL | -0.3 | 27 | V | |
| Inverter dimming | VDIM | -0.3 | 5.5 | Vdc | |
| Backlight on/off | $V_{BLON}$ | -0.3 | 5.5 | Vdc | |
| Operation Ambient Temperature | $T_{op}$ | 0 | 50 | ℃ | *1) *2) *3) |
| Storage Temperature | $T_{stg}$ | -20 | 60 | ℃ | *1) *2) |

[Note1] The relative temperature and humidity range are as below sketch

Humidity≦85%RH without condensation.

Relative Humidity ≦90% (Ta≦ 40℃), Wet Bulb Temperature ≦39℃ (Ta≧40℃)

[Note2] If you use the product in a environment which's over the definition of temperature and humidity too long,it will effect the result of visual inspecfion.

[Note3] If you operate the product in normal temperature range, the center surface of panel should be under 60℃.

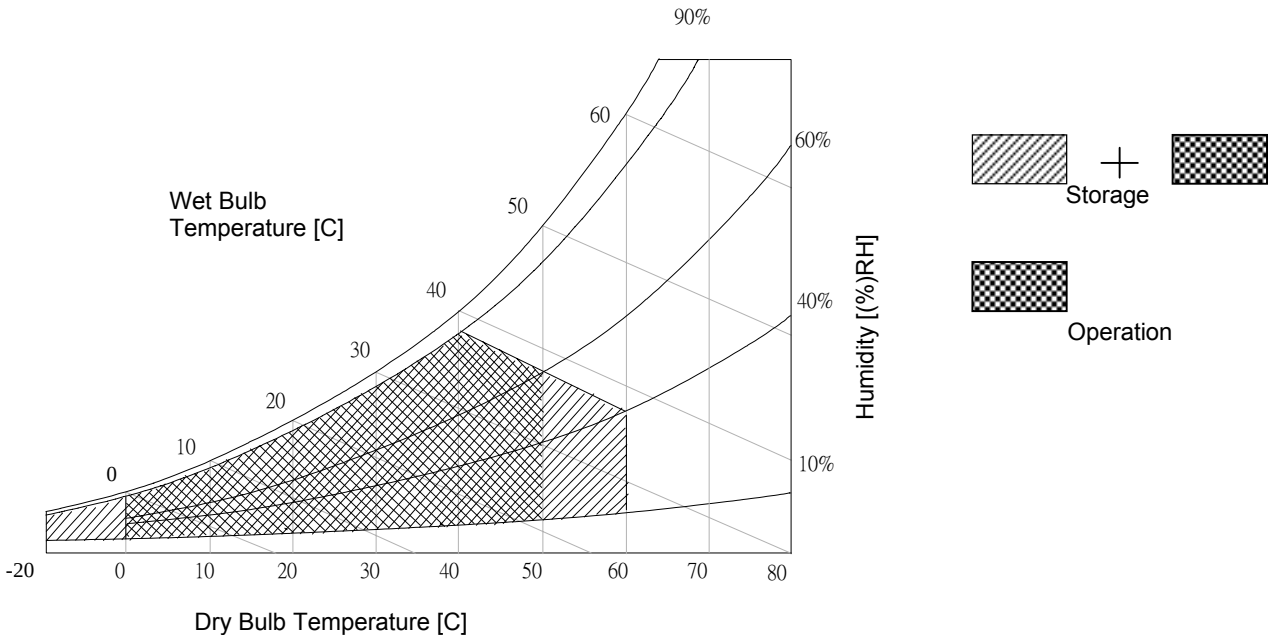

# 3. ELECTRICAL CHARACTERISTICS

## 3.1 TFT-LCD MODULE

Ta=25℃

| ITEM | | SYMBOL | MIN | TYP | MAX | UNIT | REMARK |
|---|---|---|---|---|---|---|---|
| LCD Power Supply Voltage | | VCC | 11.4 | 12.0 | 12.6 | V | *1) |
| Ripple Voltage | | Vrpd | -- | -- | 100 | mVp-p | VIN=+12.0V |
| Rush current | | Irush | -- | -- | 3 | A | *2) |
| LCD Power Supply Current | White | ICC | | 540 | -- | mA | *3) |
| | Black | | | 400 | | | |
| | RGB stripe | | | 570 | | | |
| LCD power consumption | | Pc | -- | 6.84 | -- | W | |
| High input voltage of LVDS | | $V_{IN+}$ | -- | -- | 100 | mV | *4) |
| Low input voltage of LVDS | | $V_{IN-}$ | 100 | -- | -- | mV | |
| nput common voltage of LVDS | | VCM | -- | 1.25 | - | V | |
| Input terminal resist of LVDS | | $R_T$ | -- | 100 | -- | ohm | |

[Note 1] The module should be always operated within above ranges.

VCC-dip state:

1) When 9V≦VCC＜11.4 V, td≦10 ms.

2) VCC ＞ 11.4V, VCC-dip condition should also follow the VCC-turn-off condition.

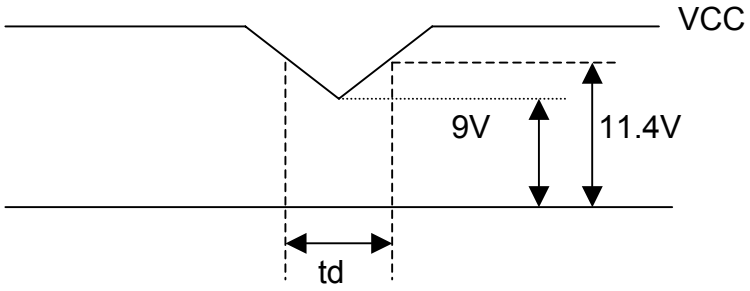


[Note 2] Measure conditions:

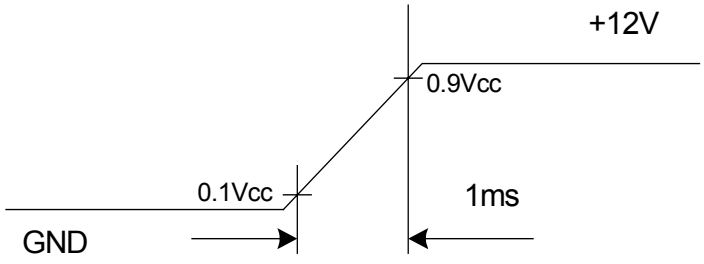


Vcc rising time is 1 ms

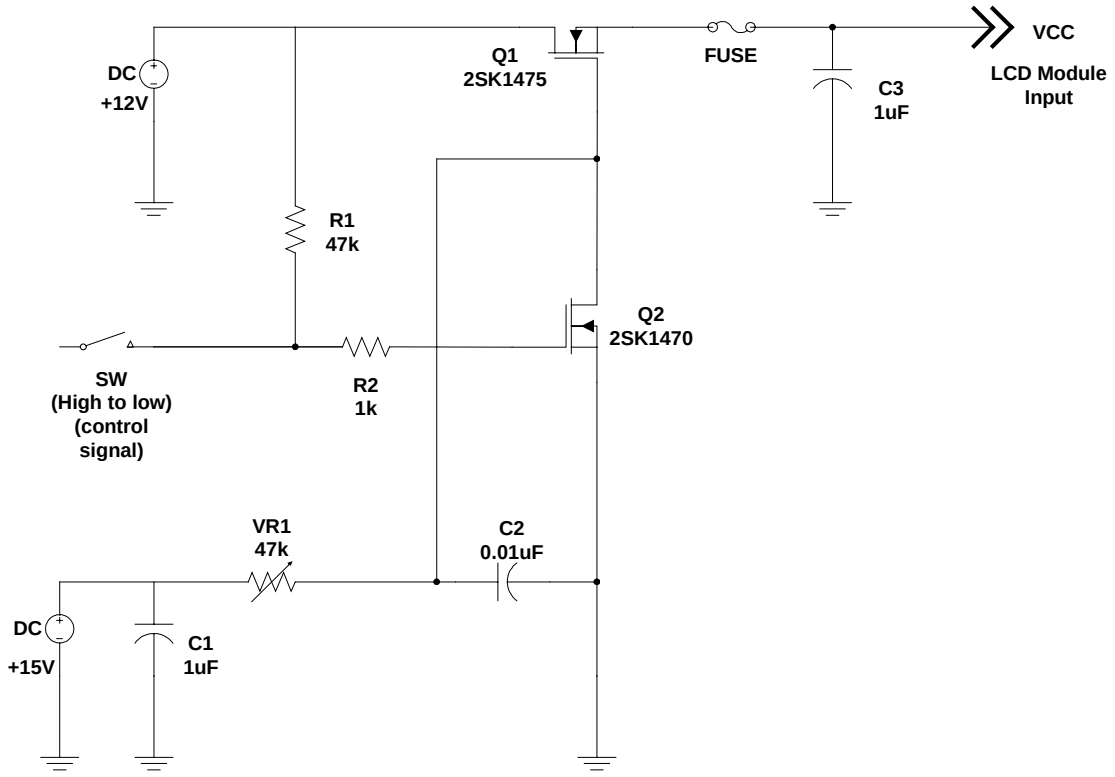


[Note 3] The specified power supply current is under condition at Vcc=12V, Ta=25+/-2℃, $f_v$=60Hz, whereas a power dissipation check pattern below is displayed.

a. White pattern

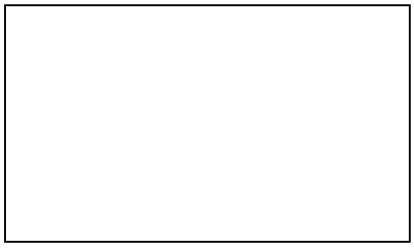

b. Black pattern

c. RGB Stripe pattern

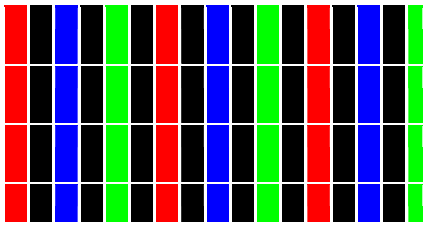

[Note 4] LVDS signal definition:

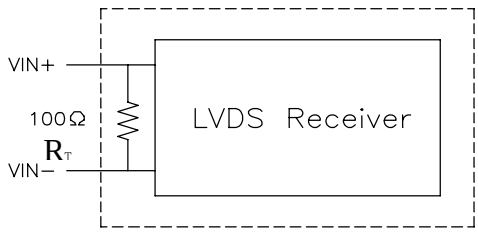


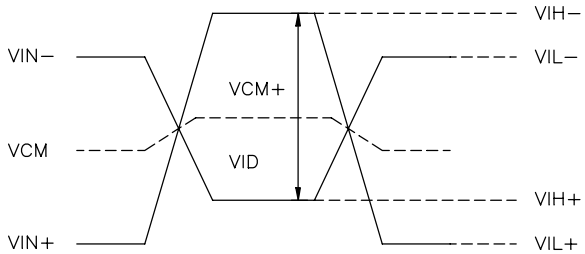


VID = $VIN_+$ – VIN-, △VCM = | $VCM_+$–VCM- |,

△VID = | $VID_+$–VID- |, VID+ = | $VIH_+$–VIH- |,

VID- = | $VIL_+$–VIL- |, VCM = ( $VIN_+$+VIN- ) / 2,

VCM+ = ( $VIH_+$+VIH- ) / 2,VCM- =( $VIL_+$+VIL- ) / 2

VIN+: Positive differential DATA & CLK input

VIN-: Negative differential DATA & CLK input

### 3-2 POWER SEQUENCE

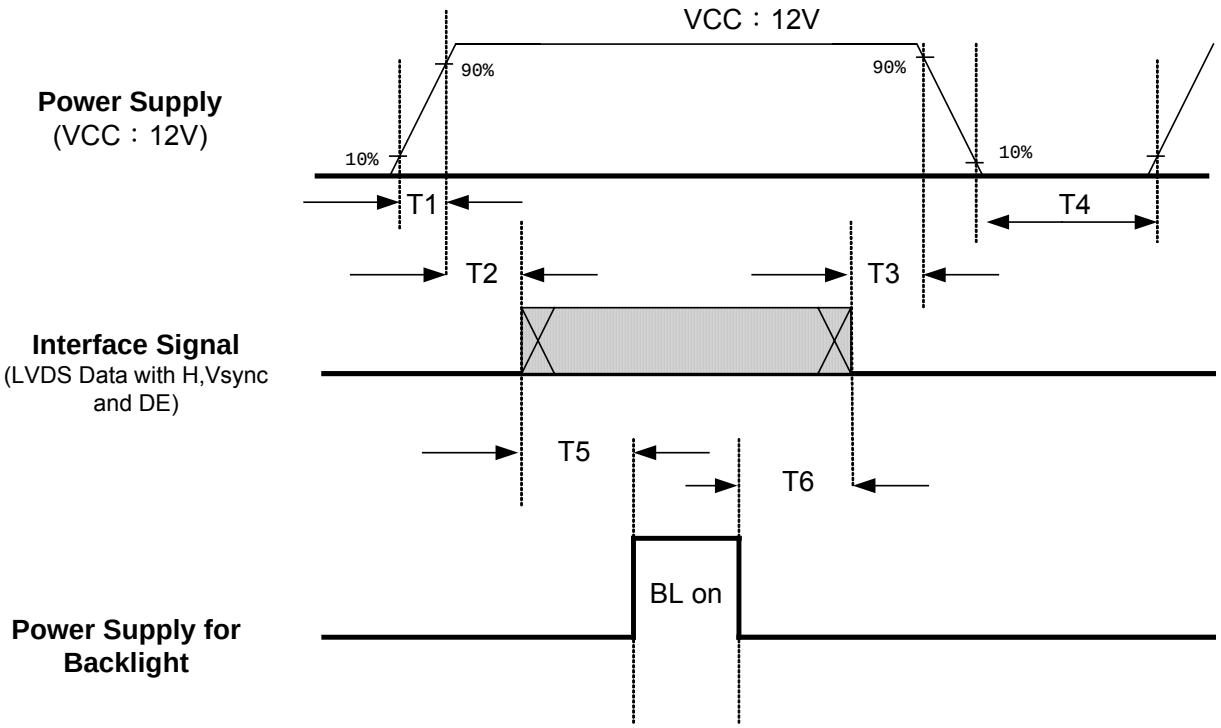


Power Sequence Table

| Parameter | Value | | | Unit |
|---|---|---|---|---|
| | Min | Typ | Max | |
| T1 | 1 | --- | 30 | ms |
| T2 | 0 | --- | 50 | ms |
| T3 | 0 | --- | 50 | ms |
| T4 | 2000 | --- | | ms |
| T5 | 1000 | --- | | ms |
| T6 | 100 | --- | | ms |

[Note 1] Please avoid floating state of interface signal at invalid period.

[Note 2] When the interface signal is invalid, be sure to pull down the power supply of LCD to 0V.

[Note 3] Lamp power must be turn off after power supply of LCD which the interface signal is valid.

### 3-3 BACKLIGHT INVERTER UNIT

| ITEM | | SYMBOL | MIN | TYP | MAX | UNIT | REMARK |
|---|---|---|---|---|---|---|---|
| Lamp voltage | | VL | -- | 1400 | -- | Vrms | IL=5.0mA |
| Lamp current | | IL | 4.5 | 5 | 5.5 | mArms | *1) |
| Lamp life time | | LT | 50000 | -- | -- | hr | *2) |
| Input voltage of inverter | | VBL | 21.6 | 24 | 26.4 | V | *3) |
| Input current of inverter | | IIN0 | -- | (5.7) | -- | A | *4) |
| | | IIN | -- | (5.4) | -- | | *5) |
| Lamp frequency | | FL | 61.5 | 63.5 | 65.5 | KHz | *6) |
| Inverter dimming voltage | | VDIM | 0 | -- | 5 | Vdc | *7) |
| Inverter duty ratio | | D | 20 | -- | 100 | % | VDIM=5V(MAX.) |
| Inverter opening voltage | | Vopen | 2300 | -- | 2700 | Vrms | |
| Backlight on /off control voltage | ON | $V_{BLON}$ | 2.0 | -- | 5 | V | |
| | OFF | | 0 | -- | 0.8 | | |
| Power consumption | | BLW0 | -- | (140) | -- | W | *4) |
| | | BLW | -- | (130) | -- | | *5) |

[Note 1] Lamp Current measurement method: (The current meter is connected to low voltage end) Take the average of 16 CCFLs' lamp current as $V_{DIM}$ = 5V after power on for 30 minutes.

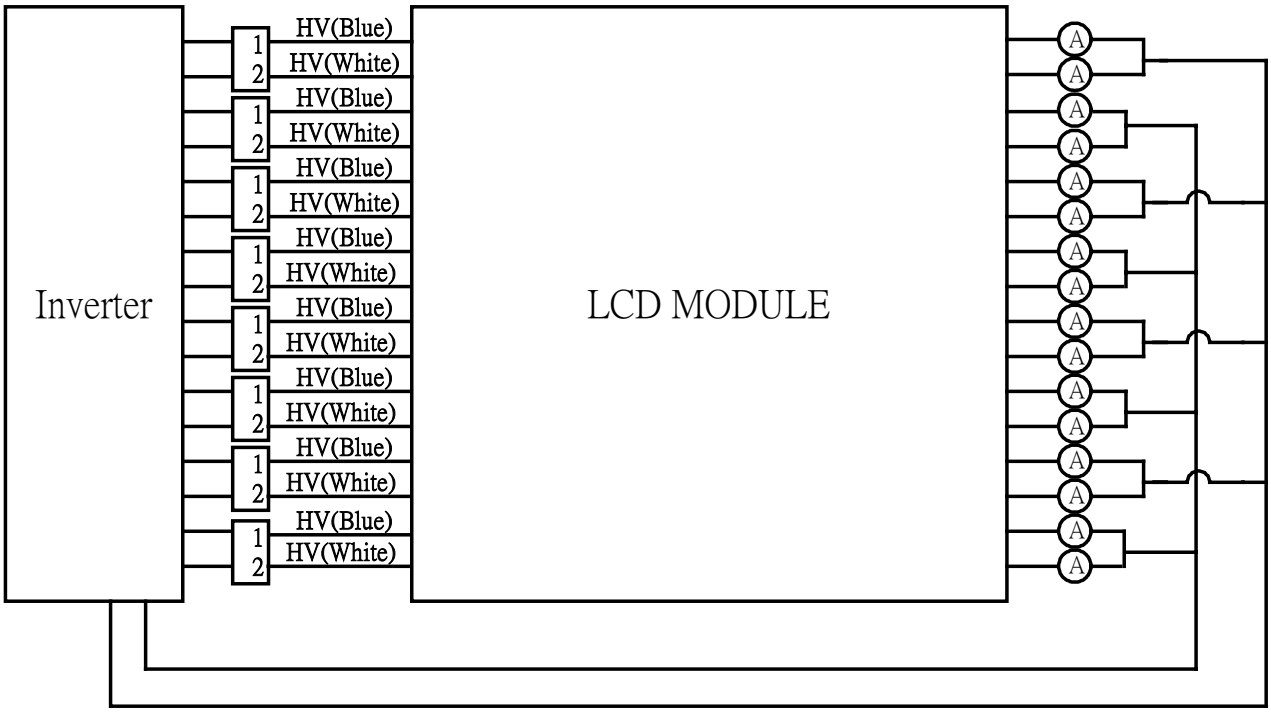


[Note2] Definition of the lamp life time:
When lamp luminance redue to 50% or lower than its initial value.

[Note3] Ripple voltage that occur at the instant of power-on can't exceed 30V.

[Note4] 25°C; $V_{DIM}$ = 5V(MAX.), After power on for 5 seconds.

[Note5] 25°C; $V_{DIM}$ = 5V(MAX.), After power on for 30 Minutes.

[Note6] Electrical and optical characterisitics color chromaticity are not included for being maintainable in a range +/- 10% when the inverter operates within this frequency range.

[Note7] Brightness is the darkest when $V_{DIM}$ = 0V
Brightness is the brightest when $V_{DIM}$ = 5V

# 4. INTERFACE PIN CONNECTION

## 4.1 TFT LCD MODULE

Connector Part No.: 20389-030E (I-PEX)

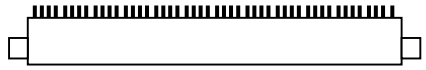

1 30

| Pin NO | Symbol | Description | Note |
|---|---|---|---|
| 1 | VCC | Power supply: +12V | |
| 2 | VCC | Power supply: +12V | |
| 3 | GND | Ground | |
| 4 | GND | Ground | |
| 5 | RxIN0- | Data- | |
| 6 | RxIN0+ | Data+ | |
| 7 | GND | Ground | |
| 8 | RxIN1- | Data- | |
| 9 | RxIN1+ | Data+ | |
| 10 | GND | Ground | |
| 11 | RxIN2- | Data- | |
| 12 | RxIN2+ | Data+ | |
| 13 | GND | Ground | |
| 14 | RxCLKIN- | Clock- | |
| 15 | RxCLKIN+ | Clock+ | |
| 16 | GND | Ground | |
| 17 | RxIN3- | Data- | |
| 18 | RxIN3+ | Data+ | |
| 19 | NC | NC | |
| 20 | NC | NC | |
| 21 | NC | NC | |
| 22 | NC | NC | |
| 23 | NC | NC | |
| 24 | NC | NC | |
| 25 | NC | NC | |
| 26 | NC | NC | |
| 27 | DMS | LVDS Data Mapping Select | *1) |
| 28 | NC | NC | |
| 29 | NC | NC | |
| 30 | GND | Ground | |

[Note 1] LVDS OPTION PIN 27(DMS):

| DMS (Pin 27) | LVDS format |
|---|---|
| GND | No-JEIDA |
| NC | JEIDA |

## 4-2 LVDS DATA MAPPING

### 1) Pin 27: GND, Non-JEIDA mode

**Non-JEIDA SPEC**

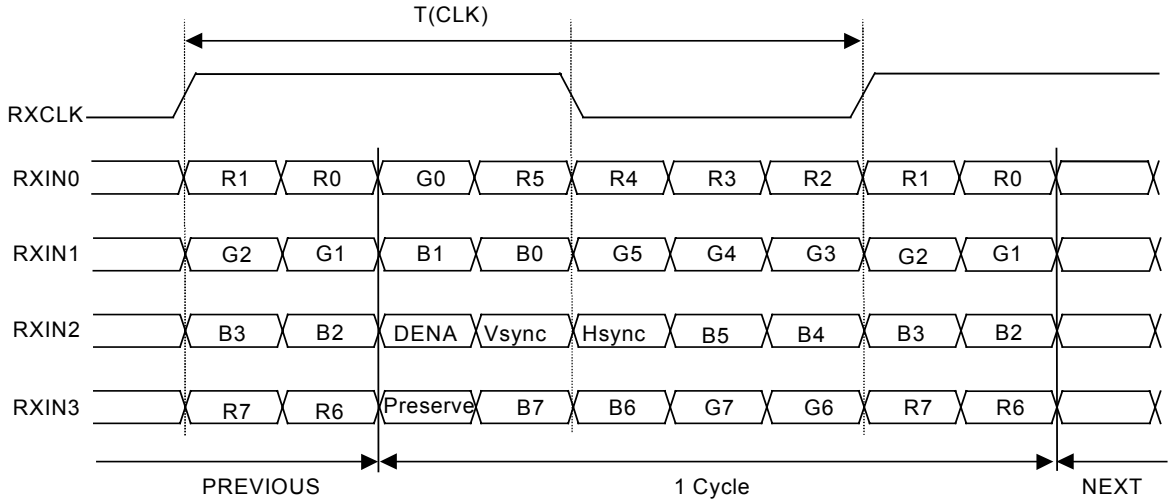


**Note: R/G/B[7]s are MSBs and R/G/B[0]s are LSBs**

### 2) Pin 27: NC, JEIDA mode

**JEIDA SPEC**

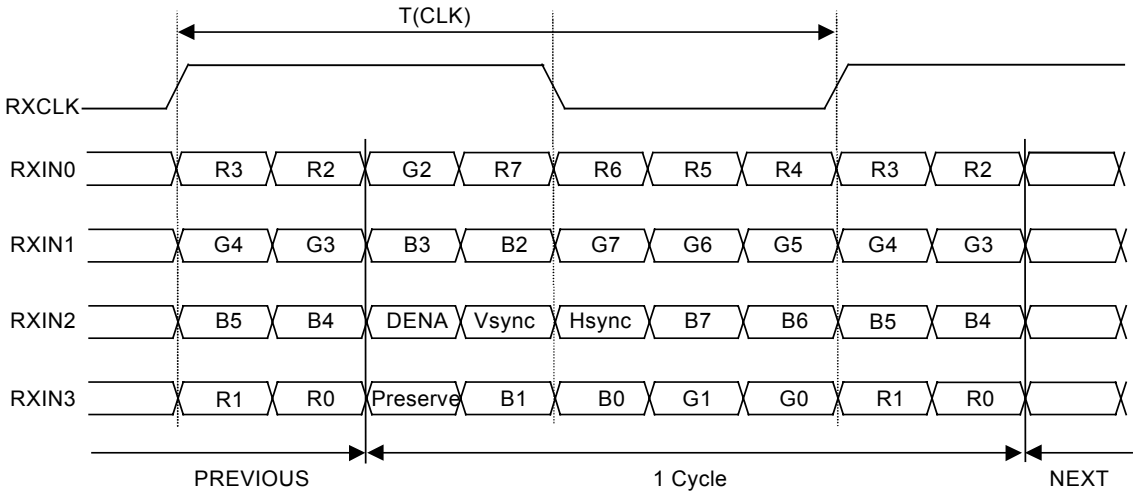


**Note: R/G/B[7]s are MSBs and R/G/B[0]s are LSBs**

**4-3. INVERTER**

Connector

1) Connector (Receptacle)
   S14B-PH-SM3-TB (JST) or compatible.
2) Mating connector (Plug)
   PRH-14 (JST) or compatible.

| PIN NO | SYMBOL | DESCRIPTION | NOTE |
|---|---|---|---|
| 1 | VBL | Supply Voltage 24V | |
| 2 | VBL | Supply Voltage 24V | |
| 3 | VBL | Supply Voltage 24V | |
| 4 | VBL | Supply Voltage 24V | |
| 5 | VBL | Supply Voltage 24V | |
| 6 | GND | Ground | |
| 7 | GND | Ground | |
| 8 | GND | Ground | |
| 9 | GND | Ground | |
| 10 | GND | Ground | |
| 11 | NC | NC(Test pin or else) | |
| 12 | BLON | ON/OFF Control | *1) |
| 13 | VDIM | 0V~5V | *2) |
| 14 | GND | GND | |

[Note 1] ON=5V, OFF=0V; When this PIN is disconnecting with power, the Inverter is in OFF status.

[Note 2] Max Brightness =5V, Min Brightness =0V; When this PIN is disconnecting with power, the output status of Inverter is the same as VDIM＝0V.

# 5. INTERFACE TIMING

## 5-1 TIMING SPECIFICATION

| Signal | Item | Symbol | Min | Typ | Max | Unit | Note |
|---|---|---|---|---|---|---|---|
| Clock | Frequency | 1/Tc | 62.7 | 80 | 84 | MHz | |
| Vertcial Active Display Term | Frame Rate | Fr | 47 | 60 | 63 | Hz | |
| | Total | Tv | 790 | 810 | 888 | Th | Tv=Tvd+Tvb |
| | Display | Tvd | 768 | 768 | 768 | Th | |
| | Blank | Tvb | 22 | 42 | 120 | Th | |
| Horizontal Active Display Term | Total | Th | 1575 | 1648 | 1936 | Tc | Th=Thd+Thb |
| | Display | Thd | 1366 | 1366 | 1366 | Tc | |
| | Blank | Thb | 209 | 282 | 570 | Tc | |

## 5-2. TIMING CHART

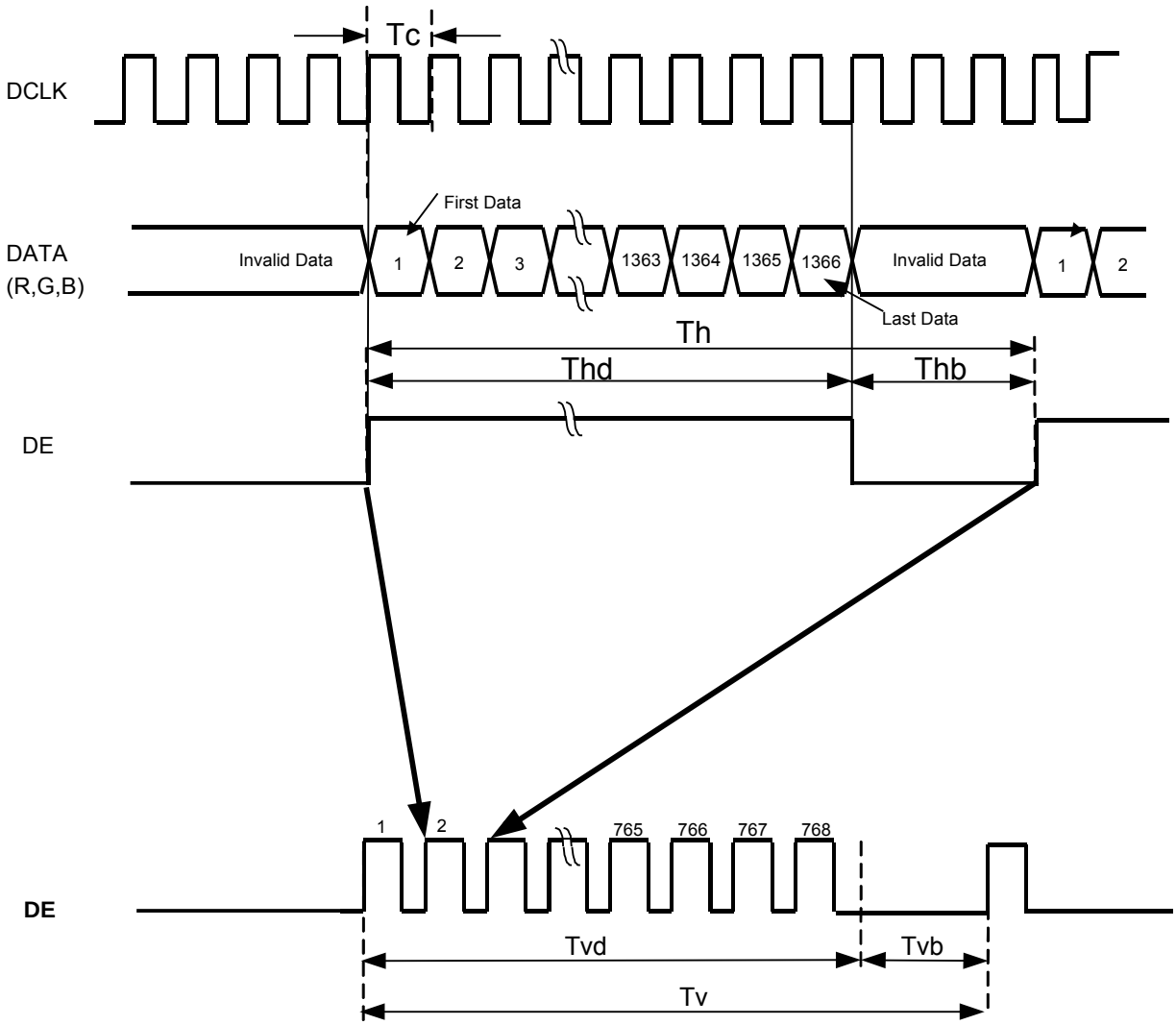

## 5-3. COLOR DATA ASSIGNMENT

| Color | | Input Color Data | | | | | | | | | | | | | | | | | | | | | | | |
|---|---|---|---|---|---|---|---|---|---|---|---|---|---|---|---|---|---|---|---|---|---|---|---|---|---|
| | | Red | | | | | | | | Green | | | | | | | | Blue | | | | | | | |
| | | MSB | | | | | | | LSB | MSB | | | | | | | LSB | MSB | | | | | | | LSB |
| | | R7 | R6 | R5 | R4 | R3 | R2 | R1 | R0 | G7 | G6 | G5 | G4 | G3 | G2 | G1 | G0 | B7 | B6 | B5 | B4 | B3 | B2 | B1 | B0 |
| Basic Color | Black | 0 | 0 | 0 | 0 | 0 | 0 | 0 | 0 | 0 | 0 | 0 | 0 | 0 | 0 | 0 | 0 | 0 | 0 | 0 | 0 | 0 | 0 | 0 | 0 |
| | Red(255) | 1 | 1 | 1 | 1 | 1 | 1 | 1 | 1 | 0 | 0 | 0 | 0 | 0 | 0 | 0 | 0 | 0 | 0 | 0 | 0 | 0 | 0 | 0 | 0 |
| | Green(255) | 0 | 0 | 0 | 0 | 0 | 0 | 0 | 0 | 1 | 1 | 1 | 1 | 1 | 1 | 1 | 1 | 0 | 0 | 0 | 0 | 0 | 0 | 0 | 0 |
| | Blue(255) | 0 | 0 | 0 | 0 | 0 | 0 | 0 | 0 | 0 | 0 | 0 | 0 | 0 | 0 | 0 | 0 | 1 | 1 | 1 | 1 | 1 | 1 | 1 | 1 |
| | Cyan | 0 | 0 | 0 | 0 | 0 | 0 | 0 | 0 | 1 | 1 | 1 | 1 | 1 | 1 | 1 | 1 | 1 | 1 | 1 | 1 | 1 | 1 | 1 | 1 |
| | Megenta | 1 | 1 | 1 | 1 | 1 | 1 | 1 | 1 | 0 | 0 | 0 | 0 | 0 | 0 | 0 | 0 | 1 | 1 | 1 | 1 | 1 | 1 | 1 | 1 |
| | Yellow | 1 | 1 | 1 | 1 | 1 | 1 | 1 | 1 | 1 | 1 | 1 | 1 | 1 | 1 | 1 | 1 | 0 | 0 | 0 | 0 | 0 | 0 | 0 | 0 |
| | White | 1 | 1 | 1 | 1 | 1 | 1 | 1 | 1 | 1 | 1 | 1 | 1 | 1 | 1 | 1 | 1 | 1 | 1 | 1 | 1 | 1 | 1 | 1 | 1 |
| Red | Red(000) Dark | 0 | 0 | 0 | 0 | 0 | 0 | 0 | 0 | 0 | 0 | 0 | 0 | 0 | 0 | 0 | 0 | 0 | 0 | 0 | 0 | 0 | 0 | 0 | 0 |
| | Red(001) | 0 | 0 | 0 | 0 | 0 | 0 | 0 | 1 | 0 | 0 | 0 | 0 | 0 | 0 | 0 | 0 | 0 | 0 | 0 | 0 | 0 | 0 | 0 | 0 |
| | Red(002) | 0 | 0 | 0 | 0 | 0 | 0 | 1 | 0 | 0 | 0 | 0 | 0 | 0 | 0 | 0 | 0 | 0 | 0 | 0 | 0 | 0 | 0 | 0 | 0 |
| | ---------- ---------- | --- | --- | --- | --- | --- | --- | --- | --- | --- | --- | --- | --- | --- | --- | --- | --- | --- | --- | --- | --- | --- | --- | --- | --- |
| | ---------- ---------- | --- | --- | --- | --- | --- | --- | --- | --- | --- | --- | --- | --- | --- | --- | --- | --- | --- | --- | --- | --- | --- | --- | --- | --- |
| | Red(253) | 1 | 1 | 1 | 1 | 1 | 1 | 0 | 1 | 0 | 0 | 0 | 0 | 0 | 0 | 0 | 0 | 0 | 0 | 0 | 0 | 0 | 0 | 0 | 0 |
| | Red(254) | 1 | 1 | 1 | 1 | 1 | 1 | 1 | 0 | 0 | 0 | 0 | 0 | 0 | 0 | 0 | 0 | 0 | 0 | 0 | 0 | 0 | 0 | 0 | 0 |
| | Red(255) Bright | 1 | 1 | 1 | 1 | 1 | 1 | 1 | 1 | 0 | 0 | 0 | 0 | 0 | 0 | 0 | 0 | 0 | 0 | 0 | 0 | 0 | 0 | 0 | 0 |
| Green | Green(000) Dark | 0 | 0 | 0 | 0 | 0 | 0 | 0 | 0 | 0 | 0 | 0 | 0 | 0 | 0 | 0 | 0 | 0 | 0 | 0 | 0 | 0 | 0 | 0 | 0 |
| | Green(001) | 0 | 0 | 0 | 0 | 0 | 0 | 0 | 0 | 0 | 0 | 0 | 0 | 0 | 0 | 0 | 1 | 0 | 0 | 0 | 0 | 0 | 0 | 0 | 0 |
| | Green(002) | 0 | 0 | 0 | 0 | 0 | 0 | 0 | 0 | 0 | 0 | 0 | 0 | 0 | 0 | 1 | 0 | 0 | 0 | 0 | 0 | 0 | 0 | 0 | 0 |
| | ---------- ---------- | --- | --- | --- | --- | --- | --- | --- | --- | --- | --- | --- | --- | --- | --- | --- | --- | --- | --- | --- | --- | --- | --- | --- | --- |
| | ---------- ---------- | --- | --- | --- | --- | --- | --- | --- | --- | --- | --- | --- | --- | --- | --- | --- | --- | --- | --- | --- | --- | --- | --- | --- | --- |
| | Green(253) | 0 | 0 | 0 | 0 | 0 | 0 | 0 | 0 | 1 | 1 | 1 | 1 | 1 | 1 | 0 | 1 | 0 | 0 | 0 | 0 | 0 | 0 | 0 | 0 |
| | Green(254) | 0 | 0 | 0 | 0 | 0 | 0 | 0 | 0 | 1 | 1 | 1 | 1 | 1 | 1 | 1 | 0 | 0 | 0 | 0 | 0 | 0 | 0 | 0 | 0 |
| | Green(255) Bright | 0 | 0 | 0 | 0 | 0 | 0 | 0 | 0 | 1 | 1 | 1 | 1 | 1 | 1 | 1 | 1 | 0 | 0 | 0 | 0 | 0 | 0 | 0 | 0 |
| Blue | Blue(000) Dark | 0 | 0 | 0 | 0 | 0 | 0 | 0 | 0 | 0 | 0 | 0 | 0 | 0 | 0 | 0 | 0 | 0 | 0 | 0 | 0 | 0 | 0 | 0 | 0 |
| | Blue(001) | 0 | 0 | 0 | 0 | 0 | 0 | 0 | 0 | 0 | 0 | 0 | 0 | 0 | 0 | 0 | 0 | 0 | 0 | 0 | 0 | 0 | 0 | 0 | 1 |
| | Blue(002) | 0 | 0 | 0 | 0 | 0 | 0 | 0 | 0 | 0 | 0 | 0 | 0 | 0 | 0 | 0 | 0 | 0 | 0 | 0 | 0 | 0 | 0 | 1 | 0 |
| | ---------- ---------- | --- | --- | --- | --- | --- | --- | --- | --- | --- | --- | --- | --- | --- | --- | --- | --- | --- | --- | --- | --- | --- | --- | --- | --- |
| | ---------- ---------- | --- | --- | --- | --- | --- | --- | --- | --- | --- | --- | --- | --- | --- | --- | --- | --- | --- | --- | --- | --- | --- | --- | --- | --- |
| | Blue(253) | 0 | 0 | 0 | 0 | 0 | 0 | 0 | 0 | 0 | 0 | 0 | 0 | 0 | 0 | 0 | 0 | 1 | 1 | 1 | 1 | 1 | 1 | 0 | 1 |

[Note 1] Definition of gray scale

Color (n): n indicates gray scale level, higher n means brighter level.

[Note 2] Data: 1-High, 0-Low

# 6. BLOCK DIAGRAM

## 6.1 TFT LCD MODULE

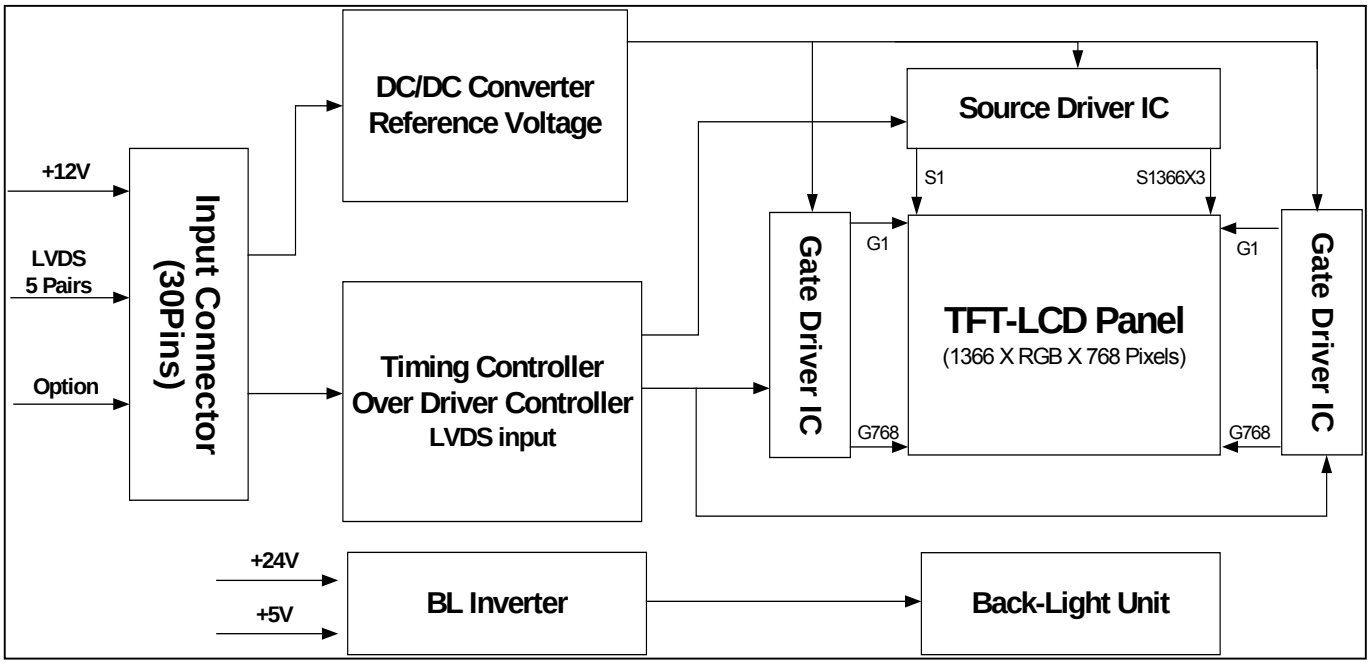


## 6-2. BACKLIGHT UNIT

[Note 1] Lamp connector

HV(CN2): BHR-02(8.0)VS-1 (JST)*8 Mating connector: SM02 (8.0) B-BHS-1-TA (JST)

LV1: BHSR-02VS-1 (JST); Mating connector: SM02B_BHSS-1-TB

# 7. MECHANICAL SPECIFICATION

## 7-1. FRONT SIDE

(Include Inverter, if the dimension is not clear, please refer to the table.)

[Unit: mm]

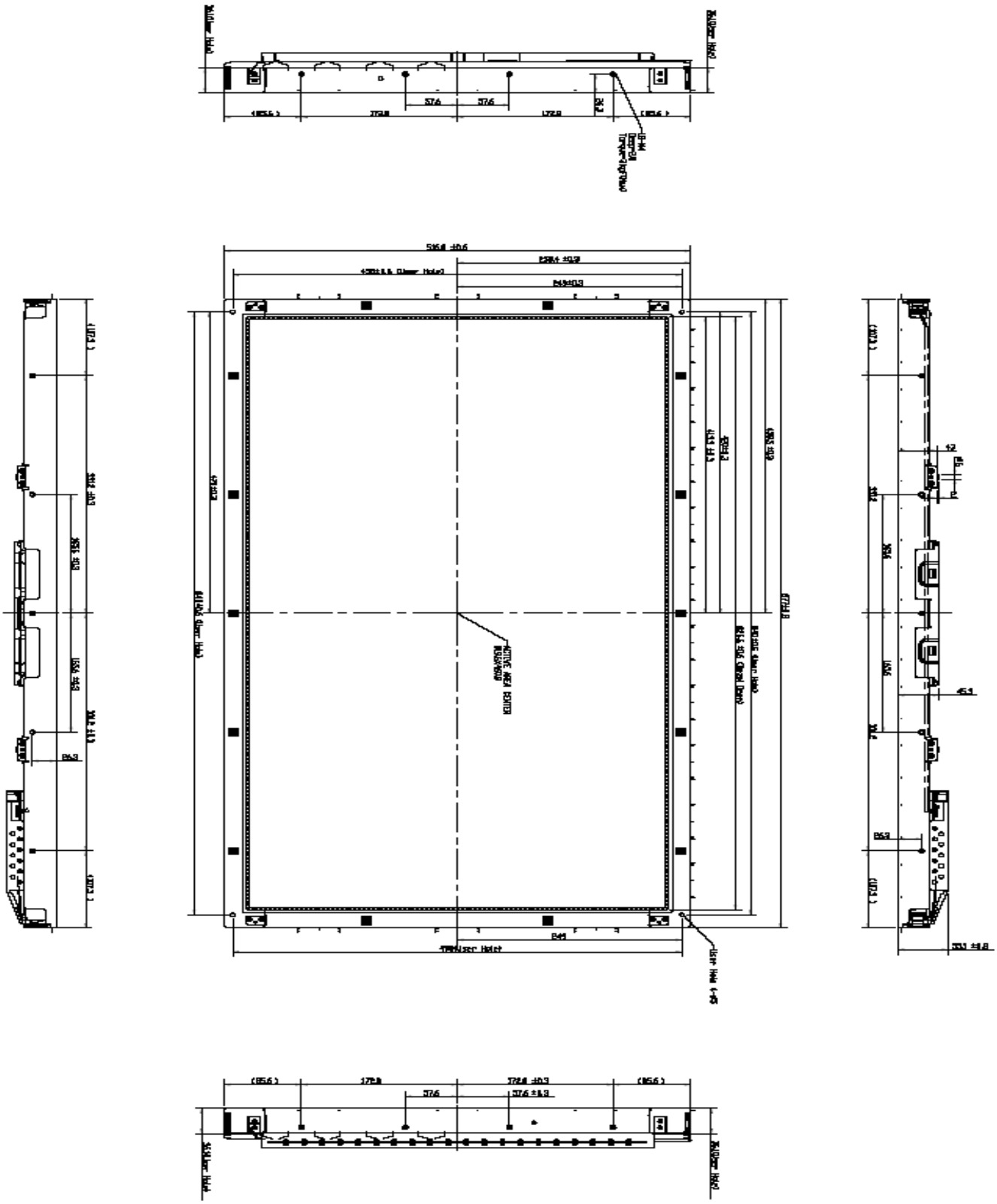

## 7-2. REAR SIDE

(Include Inverter, if the dimension is not clear, please refer to the table.)

[Unit: mm]

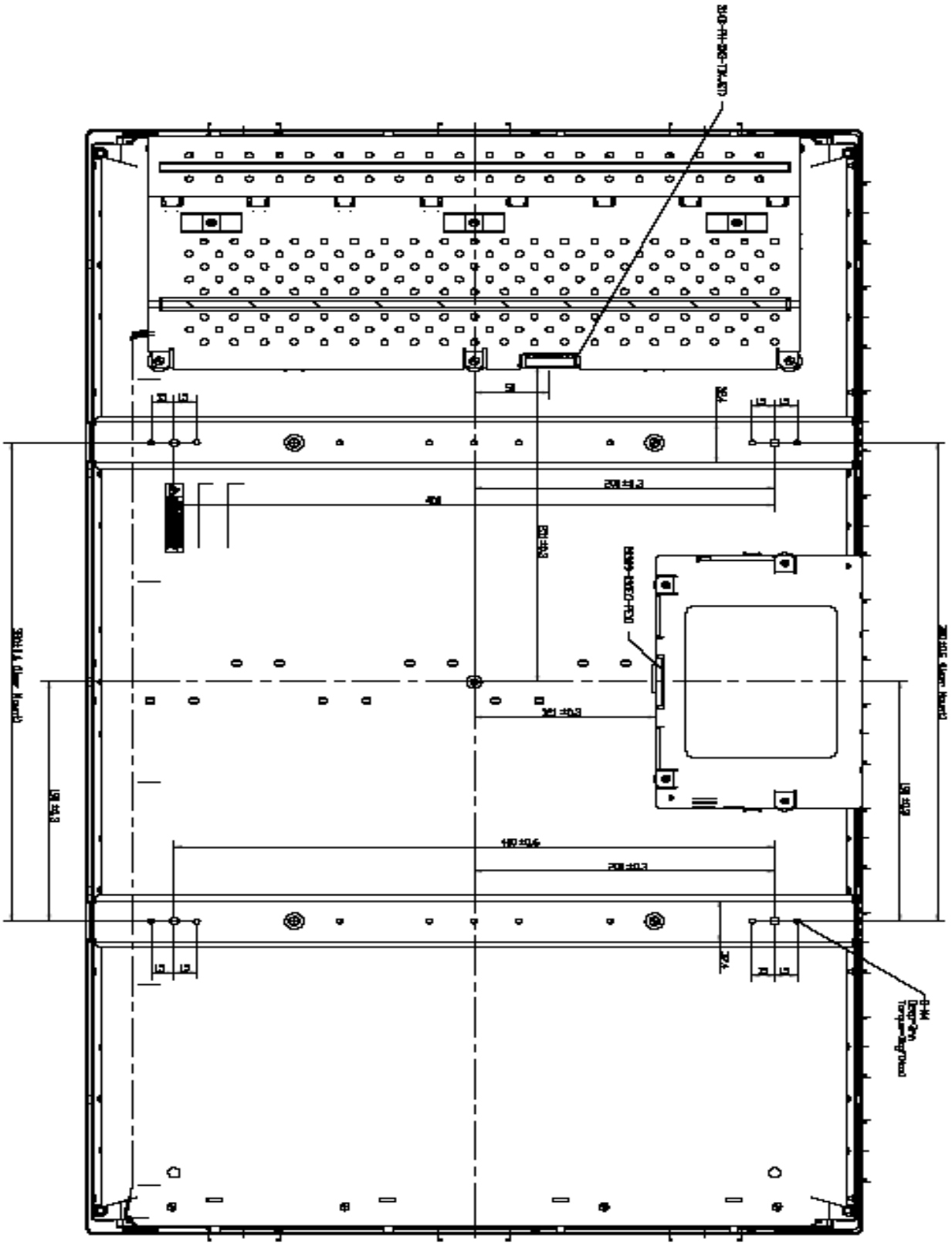

## 8.OPTICAL CHARACTERISTICS

Ta = 25°C, VCC=12V

| ITEM | | SYMBOL | CONDITION | MIN. | TYP. | MAX. | UNIT | REMARKS |
|---|---|---|---|---|---|---|---|---|
| Contrast (CEN) | | CR | θ=ψ= 0° Point-5 | 800 | 1000 | -- | -- | *1)*2)*3) |
| Luminance | Central luminance | Lwc | θ=ψ= 0° | 450 | 550 | -- | $cd/m^2$ | |
| | 5P Luminance (AVG) | Lw9 | θ=ψ= 0° | -- | 500 | -- | $cd/m^2$ | *2)*3) |
| | Uniformity | △Lw | θ=ψ= 0° | 75 | -- | -- | % | *2)*3) |
| Response Time ( White – Black ) | | tr | θ=ψ= 0° | -- | 10 | 20 | ms | *3)*4) |
| | | tf | θ=ψ= 0° | | 5 | 10 | ms | *3)*4) |
| Response Time (Gray to gray ) | | trg, tfg | | -- | 8 | 10 | ms | *5) |
| Image sticking | | tis | 2 h | -- | -- | 5 | sec | *6) |
| | | | 24 h | -- | -- | < 16 | sec | *6) |
| View angle | Horizontal | ψ | CR ≧ 10 Point-5 | -80~80 | -85~85 | -- | ° | *2)*3) |
| | Vertical | θ | | -80~80 | -85~85 | -- | ° | *2)*3) |
| Crosstalk Ratio | | CMR | θ=ψ= 0° | -- | -- | 1 | % | *3)*7) |
| Color Chromaticity | Red | Rx Ry | θ=ψ= 0° Point-5 | TBD | TBD | TBD | -- | *2)*3) |
| | Green | Gx Gy | | TBD | TBD | TBD | | |
| | Blue | Bx By | | TBD | TBD | TBD | | |
| | White | Wx Wy | | TBD | TBD | TBD | | |
| Color Temperature | | Tc | | -- | 9300 | -- | K | *3) |
| Color Gamut | | CG | | -- | 75 | -- | % | *8) |

- Contrast, Luminance, Color Chromaticity, Color Temperature and Crosstalk Ratio are measured by using: BM-5A (TOPCON) [ under the dark room condition (no ambient light)].
- Response Time is measured by using: Westar TRD-100
- View angle and Response Time(Gray to gray) are measured by using: EZ contrast XL-88

■ Measurement Condition:

After lighting on the panel 30 mins, you can proceed the Measurement testing.

The definiton of Typ value is under status of lamp current as $V_{DIM}$ = 5V after power on for 30 minutes

■ Definition of these measurement items is as follows:

[Note1] Definition of Contrast Ratio:

〔 These items are measured using BM-5A (TOPCON) under the dark room condition (no ambient light). 〕

CR= ON (White) Luminance / OFF (Black) Luminance

[Note 2] Definition of Luminance, Luminance uniformity, Contrast and the Deviation of Color Coordinate:

Luminance and Contrast: To measure at the center position “5” on the screen (NO.5), see Fig.8-1 below.

Luminance uniformity: Lw (MAX) and Lw(MIN) are the maximum and minimum luminance value measure at the position “1~5” on the screen (NO.1~5), see Fig.8-1 and below show equation:

ΔLw＝ [ (Lw(MIN)) / Lw(MAX) ] × 100%

The Deviation of Color Coordinate: To measure at the position “1~9” on the screen (NO.1~9), see Fig.8-1 below.

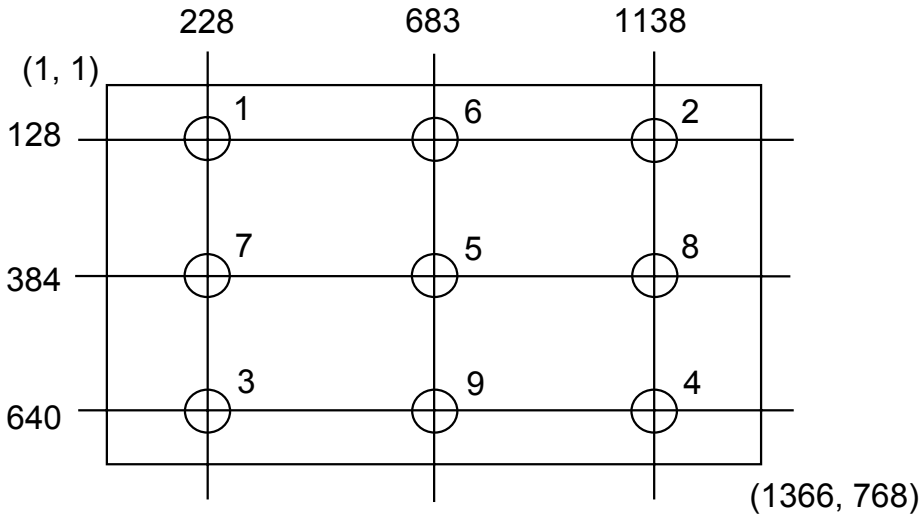


Figure 8-1. Measurement positions

[Note3] Definition of Viewing Angle ( θ, $\phi$ ):

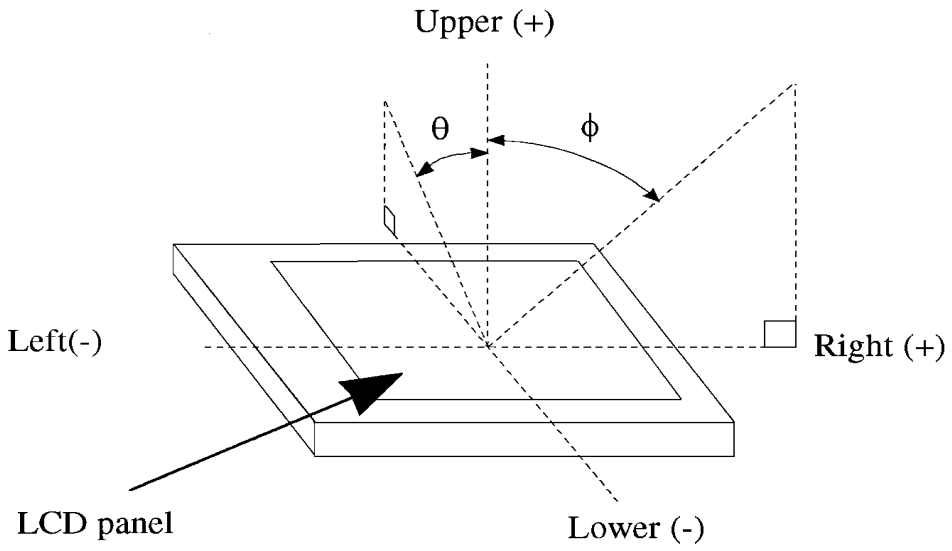


Figure 8-2. Definition of Viewing Angle

[Note 4] Definition of Response Time ( White – Black )

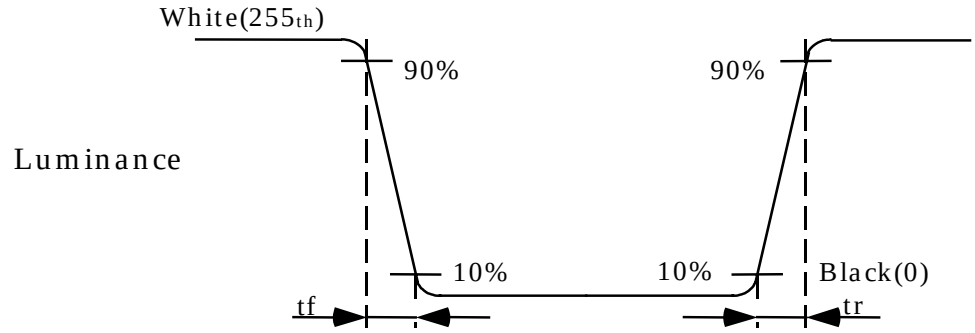


Figure 8-3. Definition of Response Time ( White – Black )

[Note 5] Definition of Response Time ( Gray to Gray, 5 × 5 levels )

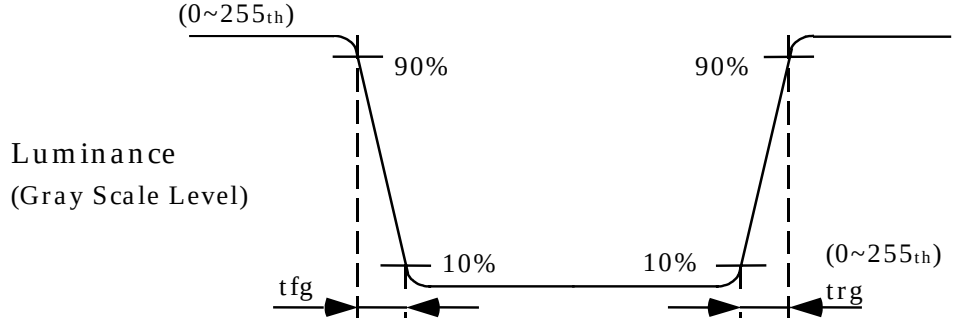


Figure 8-4. Definition of Response Time (Gray to Gray )

- The driving signal time means the signal of gray level 0、63、127、191、255.
- Gray to gray average means the average switching time of gray level 0、63、127、191、255 to each other.
- The LCD module should be stabilized at given temperature for 1 hour to avoid abrupt temperature change during measuring. In order to stabilize the luminance, the measurement should be executed after lighting Backlight for 1 hour in a windless room.

[Note6] Image sticking test method:

Continuously display the test pattern shown in the figure below for specified time. To change the module frame to gray pattern ( gray 127 pattern ), and it's displaying grade still under specfication.

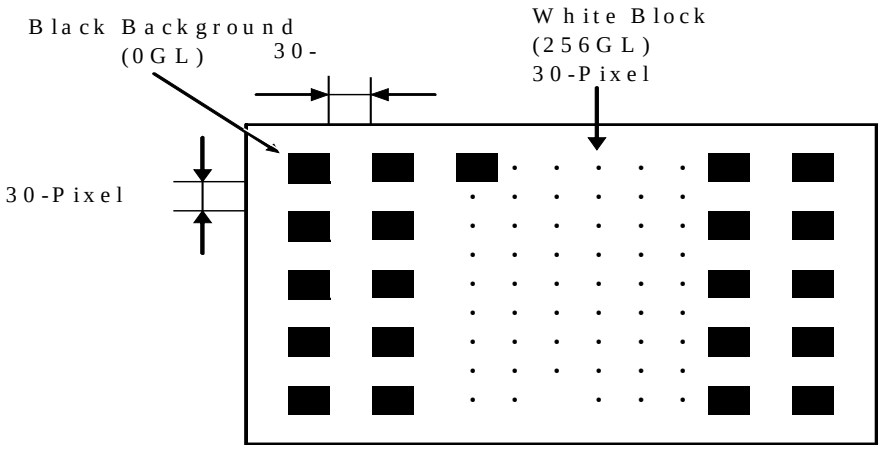


Figure 8-5. The Pattern of Image Sticking Test

[Note 7] Definition of Cross Talk Ratio

CMR = MAX ( ***( | ( LB1-LA ) / LC | ) × 100% , ( | (LB2 – LA ) / LC | ) × 100%*** )

LA: Pattern A (Half-Tone pattern) Measure point Luminance

LB1, LB2: Pattern B1, Pattern B2 Measure point Luminance

LC: Pattern C(white pattern) Measure point Luminance

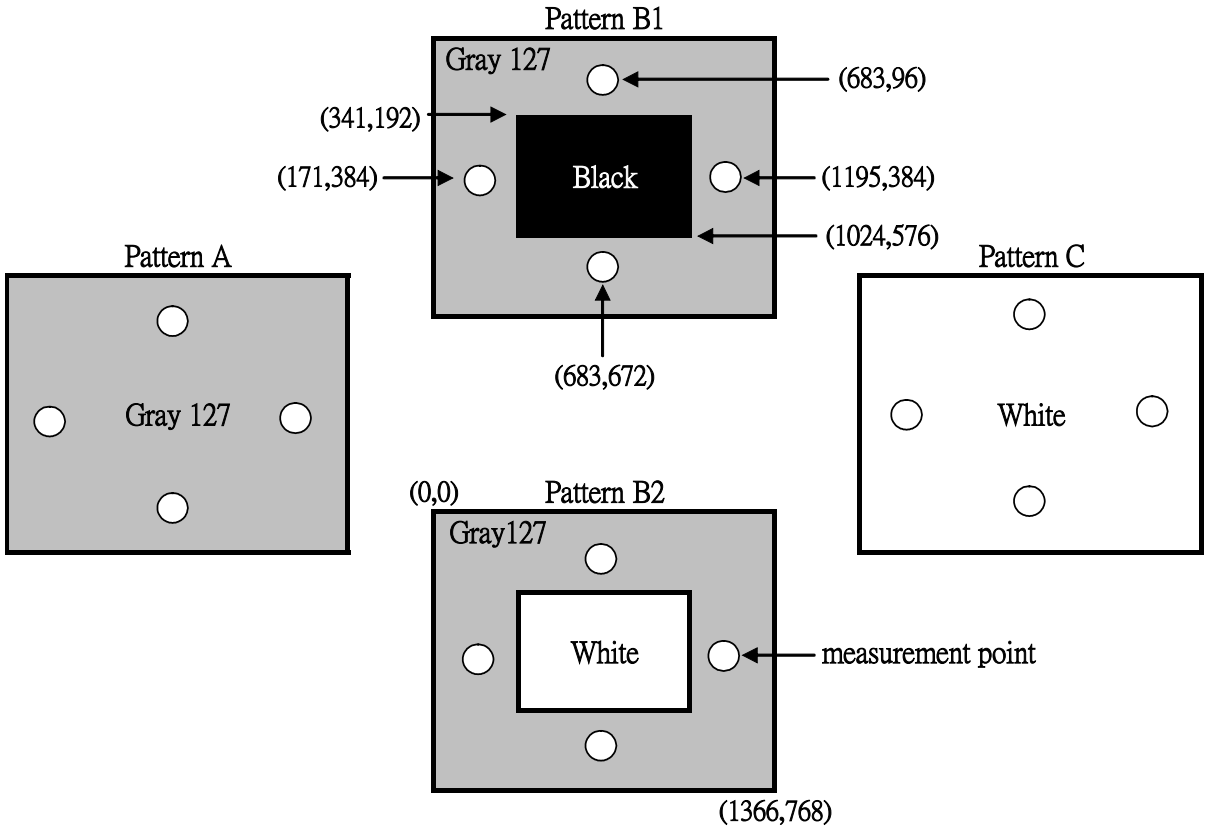


Figure 8-6. Cross Talk

[Note 8] Definition of Color Gamut:

To measure RGB three sub-pixels color gamut coordinate at CIE coordinate chart from the center of module , to form a triangle area = $A_{RGB}$.

RGB three sub-pixels of NTSC at CIE coordinate chart to form a triangle area = $N_{RGB}$.

$$CG = \frac{A_{RGB}}{N_{RGB}} \times 100$$

# 9.RELIABILITY TEST CONDITIONS

## 9-1.TEMPERTURE AND HUMIDITY

| TEST ITEMS | CONDITIONS |
|---|---|
| High Temperature Operation | 50℃; 240hrs |
| High Temperature Storage | 60℃; 240hrs |
| High Temperature<br>High Humidity Operation | 50℃; 90% RH; 240 hrs<br>(No condensation) |
| Low Temperature Operation | 0℃; 240 hrs |
| Low Temperature Storage | -20℃; 240 hrs |

## 9-2. SHOCK AND VIBRATION

| ITEMS | CONDITIONS |
|---|---|
| Shock<br>(Non-Operation) | Shock level: 980m/s$^2$(100G)<br>Waveform: half sinusoidal wave, 2ms<br>Number of shocks: one shock input in each direction of three mutually perpendicular axes for a total of six shock inputs. |
| Vibration<br>(Non-Operation) | Vibration level: 9.8m/s$^2$ (1.0G) zero to peak<br>Waveform: sinusoidal<br>Frequency range: 10 to 300 Hz<br>Frequency sweep rate: 0.5 octave/min<br>Duration: each x, y, z axis: 10 min, total 30 mins |

## 9-3. Judgment standard

The judgment of the above test should be made as follow:

- Pass: Normal display image with no obvious non-uniformity and no line defect.
  Partial transformation of the module parts shall be ignored.
- Fail: No display , obvious non-uniformity, or line defects.

# 10. HANDLING PRECAUTIONS FOR TFT-LCD MODULE

Please pay attention to the followings in handling TFT-LCD products.

## 10.1 ASSEMBLY PRECAUTION

(1) Please use the mounting hole on the module side in installing and do not beading or wrenching
LCD in assembling. And please do not drop, bend or twist LCD module in handling.

(2) Please design display housing in accordance with the following guidelines.

- Housing case must be destined carefully and do not to put stresses on LCD all sides or wrench module. The stresses may cause non-uniformity even if there is no non-uniformity statically.
- Keep sufficient clearance between LCD module back surface and housing when the LCD module is mounted. Approximately 1.0 mm of the clearance in the design is recommended taking into account the tolerance of LCD module thickness and mounting structure height on the housing.
- When some parts, such as, FPC cable and ferrite plate, are installed underneath the LCD module, still sufficient clearance is required, such as 0.5mm. This clearance is, especially, to be reconsidered when the additional parts are implemented for EMI countermeasure.
- Design the inverter location and connector position carefully so as not to put stress on lamp cable.
- Keep sufficient clearance between LCD module and the other parts, such as inverter and speaker so as not to interface the LCD module. Approximately 1.0mm of the clearance in the design is recommended.

(3) Please do not push or scratch LCD panel surface with any-thing hard. And do not soil LCD panel surface by touching with bare hands. ( Polarizer film and surface of LCD panel are easy to be flawed.)

(4) Please do not press any parts on the rear side such as source TCP, gate TCP, control circuit board and FPC during handling the LCD module. If pressing rear part could not be avoided, handle the LCD module with care not to damage them.

(5) Please wipe out LCD panel surface with absorbent cotton or soft clothe in case of it being soiled.

(6) Please wipe out drops of adhesives like saliva and water on LCD panel surface immediately. They might damage to cause panel surface variation and color change.

(7) Please do not take a LCD module to pieces and reconstruct it. Resolving and reconstructing modules may cause them not to work well.

(8) Please do not touch metal frames with bare hands and soiled gloves. A color change of the metal frames can happen during a long preservation of soiled LCD modules.

(9) Please pay attention to handling lead wire of backlight so that it is not tugged in connecting with inverter.

### 10.2 OPERATING PRECAUTIONS

(1) Please be sure to turn off the power supply before connecting and disconnecting signal input cable.

(2) Please do not change variable resistance settings in LCD module. They are adjusted to the most suitable value. If they are changed, it might happen LCD does not satisfy the characteristics specification.

(3) Please consider that LCD backlight takes longer time to become stable of radiation characteristics in low temperature than in room temperature.

(4) A condensation might happen on the surface and inside of LCD module in case of sudden change of ambient temperature.

(5) Please pay attention to displaying the same pattern for a very long time. Image might stick on LCD. If then, time going on can make LCD work well.

(6) Please obey the same caution descriptions as ones that need to pay attention to ordinary electronic parts.

### 10.3 PRECAUTIONS WITH ELECTROSTATICS

(1) This LCD module use CMOS-IC on circuit board and TFT-LCD panel, and so it is easy to be affected by electrostatics. Please be careful with electrostatics by the way of your body connecting to the ground and so on.

(2) Please remove protection film very slowly on the surface of LCD module to prevent from electrostatics occurrence.

### 10.4 STORAGE PRECAUTIONS

(1) When you store LCD for a long time, it is recommended to keep the temperature between 0℃ ~40℃ without the exposure of sunlight and keep the humidity less than 90%RH.

(2) Please do not leave the LCD in the environment of high humidity and high temperature such as 60℃ 90%RH.

(3) Please do not leave the LCD in the environment of low temperature(can not lower than -20℃).

### 10.5 SAFETY PRECAUTIONS

(1) When you waste LCD, it is recommended to crush damaged or unnecessary LCD into pieces and wash them off with solvents such as acetone and ethanol, which should later be burned.

(2) If any liquid leaks out of a damaged-glass cell and comes in contact with the hands, wash off thoroughly with soap and water.

## 10.6 OTHERS

(1) A strong incident light into LCD panel might cause display characteristics' changing inferior because of polarizer film, color filter, and other materials becoming inferior. Please do not expose LCD module direct sunlight Land strong UV rays.

(2) Please pay attention on the side of LCD module do not contact with other materials in preserving it alone.

(3) For the packaging box, please pay attention to the followings:

- Packaging box and inner case for LCD are designed to protect the LCD from the damage or scratching during transportation. Please do not open except picking LCD up from the box.
- Please do not pile them up more than 3 boxes. (They are not designed so.) And please do not turn over.
- Please handle packaging box with care not to give them sudden shock and vibrations. And also please do not throw them up.
- Packing box and inner case for LCD are made of cardboard. So please pay attention not to get them wet. (Such as keep them way the high humidity or wet place.)

NOTE : THIS RELEASED DRAWING WAS PRODUCED BY COMPUTER , DO NOT UPDATE MASTER MANUALLY

| DWG. REV. | ZONE | DESCRIPTION | DATE | REVISOR |
|---|---|---|---|---|
| | | REL FOR TOOLING | | LJ |
| | | | | |

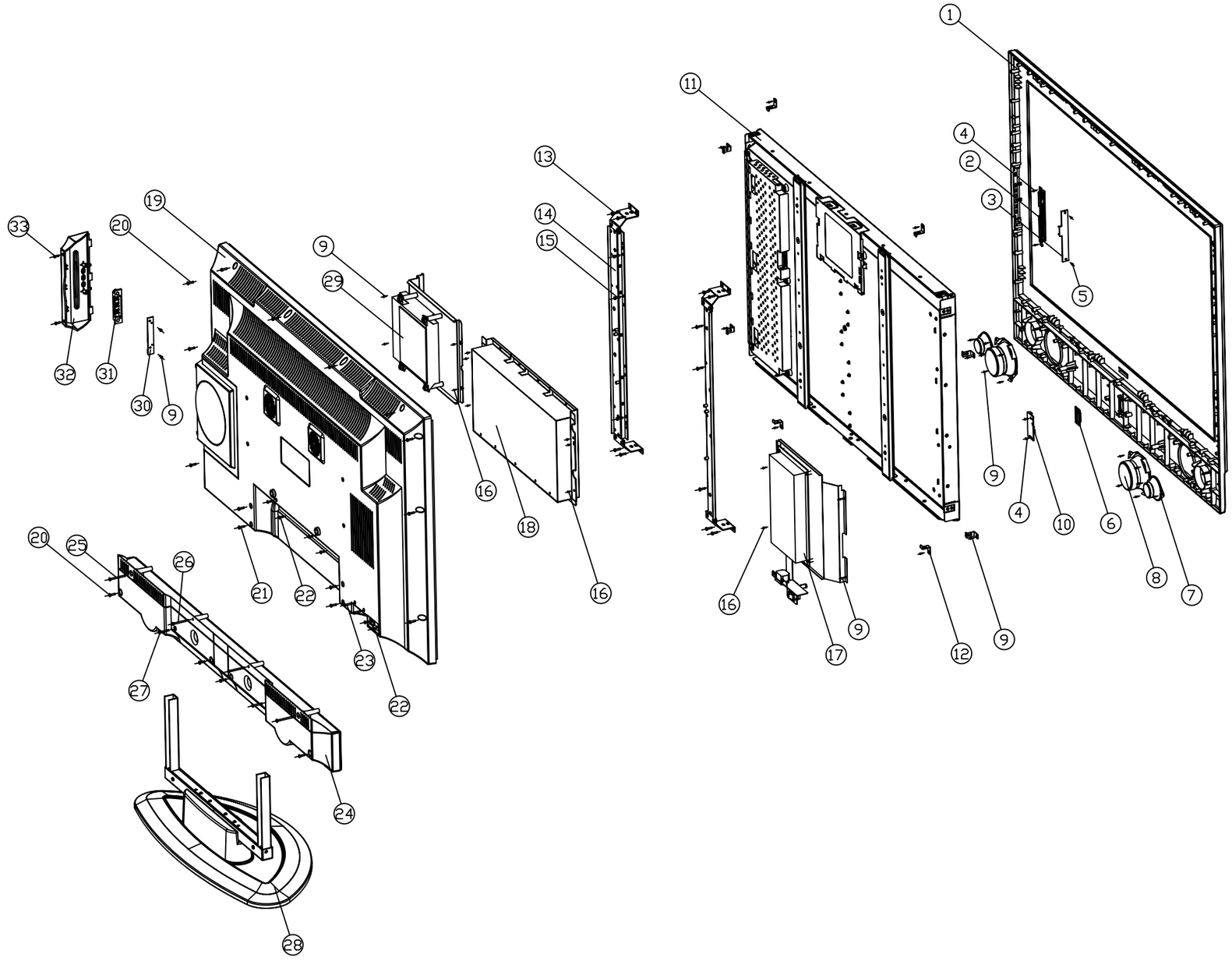


| IETM | DESCRIPTION | TYPE | QTY | REMARK |
|---|---|---|---|---|
| 33 | TAPPING SCREW | PART | 2 | |
| 32 | DVD KEY COVER | PART | 1 | |
| 31 | DVD KEY | PART | 1 | |
| 30 | DVD KEY PCB | ASSEMBLY | 1 | |
| 29 | DVD ASSY | ASSEMBLY | 1 | |
| 28 | BASE ASSY | ASSEMBLY | 1 | |
| 27 | TAPPING SCREW | PART | 2 | |
| 26 | TAPPING SCREW | PART | 2 | |
| 25 | TAPPING SCREW | PART | 2 | |
| 24 | SPEAKER CABINET BACK | PART | 1 | |
| 23 | MACH SCREW | PART | 2 | |
| 22 | MACH SCREW | PART | 6 | |
| 21 | MACH SCREW | PART | 4 | |
| 20 | TAPPING SCREW | PART | 14 | |
| 19 | BACK CABINET | PART | 1 | |
| 18 | MAIN BOARD ASSY | ASSEMBLY | 1 | |
| 17 | POWER ASSY | ASSEMBLY | 1 | |
| 16 | MACH SCREW | PART | 10 | |
| 15 | MACH SCREW | PART | 6 | |
| 14 | MAIN SUPORT | PART | 2 | |
| 13 | TAPPING SCREW | PART | 8 | |
| 12 | 'Z'BKT FRO PANEL | PART | 8 | |
| 11 | 37' PANEL ASSY | ASSEMBLY | 1 | |
| 10 | REMOTE PCB | PART | 1 | |
| 9 | TAPPING SCREW | PART | 26 | |
| 8 | BOURDON SPEAKER | PART | 2 | |
| 7 | ALT SPEAKER | PART | 2 | |
| 6 | REMOTE LENS | PART | 1 | |
| 5 | TAPPING SCREW | PART | 2 | |
| 4 | TAPPING SCREW | PART | 4 | |
| 3 | FUNCTION KEY PCB ASSY | ASSEMBLY | 1 | |
| 2 | FUNCTION KEY | PART | 1 | |
| 1 | FRONT CABINET | PART | 1 | |

| | | | | | |
|---|---|---|---|---|---|
| DRAWN. | LJ | | | | |
| CHECKED | | | | | |
| APPRD. | | | | | |
| 3rd ANGLE PROJECTION | | | | | |

TOLERENCE UNLESS OTHERWISE SPECIFIED

| | |
|---|---|
| 0: | ± 0.30 |
| 0.0 | ± 0.10 |
| 0.00: | ± 0.05 |
| ANGULAR: | ± 0.3° |
| UNIT : | mm |

KAWA ELECTRONIC R & D CENTRE

MATL.

FINISH

TITLE LCT3785TA-EXP

MODEL NO. LCT37AD

| A3 | PART NO. | DWG. NO. |
|---|---|---|
| | LCT3785TA-EXP | LCT3785TA-EXP |

SCALE 1:10 | QTY. 1 | SHEET 1 OF 1

Spare part list of LCT3701AD

| Item | Part Number | Part Description | Usage / unit | Unit | Key/Spare |
|---|---|---|---|---|---|
| | LCT37ADNDA1TS-A01 | AKAI LCT3701AD MT8202+DVD AC120V/60HZ USA SILVER | | | |
| 1> | 510-L37SD01-02AK | CARTON BOX AKAI LCT3701AD (S-MT8202 ) CPT USA K | 1 | Piece | K |
| 2> | 580-L37AD1A-01AP | IB E FOR AKAI LCT37AD S-MT8202 (DTV+PIP+DVD) CPT USA | 1 | Piece | K |
| 3> | E7501-061002 | REMOTE CONTROL K002 AKAI FOR MT8202 +DVD PIP 60KEYS SIL/BLK LCT37" | 1 | Piece | K |
| 4> | 771EL37AD02-02 | PCB ASS'Y MAIN S-MT8202 ATSC&DVD CPT LCT37" | 1 | SET | K |
| 5> | 771L37AD01-01 | NTSC TUNER PCB ASSY FOR LCD37 | 1 | SET | K |
| 6> | 771S42D102-01 | ATSC TUNER PCB ASSY (MT5111CE) | 1 | SET | K |
| 7> | 200-L37AD01-01AA | CABINET FRONT SILVER/BLACK LCT37AD CPT A | 1 | Piece | S |
| 8> | 202-L37AD03-01AA | CABINET BACK BLACK LCT3701AD A | 1 | Piece | S |
| 9> | 206-L37AD01-01R | SPEAKER BACK COVER BLACK | 1 | Piece | S |
| 10> | 258-L20AD01-01A | DVD FUNCTION KNOB COVER BLACK | 1 | Piece | S |
| 11> | 269-42SD01-01L | REMOTE RECEIVE LENS | 1 | Piece | S |
| 12> | 277-L27AD11-01S | DVD FUNCTION KNOB BLK LCT2701TD S | 1 | Piece | S |
| 13> | 277-L32AD11-03S | FUNCTION KEY SILVER AKAI LCT32AD (MATERIAL:GREY) S | 1 | Piece | S |
| 14> | 300-L37AD03-02C | POLYFOAM BOTTOM | 1 | Piece | S |
| 15> | 300-L37AD04-02C | POLYFOAM TOP | 1 | Piece | S |
| 16> | 310-030404-01 | POLYBAG 110MMX80MMX0.04MM | 1 | Piece | S |
| 17> | 310-111404-07V | POLYBAG 11"X14"X0.04 FV | 1 | Piece | S |
| 18> | 310-444750-07V | POLYBAG 44X47X50 | 1 | Piece | S |
| 19> | 370-42D102-01 | PAD CORD SPONG FOR SPK | 1 | Piece | S |
| 20> | 384-L32AB01-04AHA | PVC SHEET FOR TERMINAL (MTK-8202) W/DVD | 1 | Piece | S |
| 21> | 387-L37AD01-02AH | MODEL PLATE AKAI LCT3701AD (S-MT8202) CPT USA H | 1 | Piece | S |
| 22> | 388-42D103-01H | CAUTION PLATE ENG 42D1 H | 1 | Piece | S |
| 23> | 429-L32AD01-01S | POWER JACK BRACKET L32AD S | 1 | Piece | S |
| 24> | 436-L32AB0D-01S | TERMINAL SHEET | 1 | Piece | S |
| 25> | 481-L32AB06-01S | SHIELDING BOTTOM MT8202 | 1 | Piece | S |
| 26> | 481-L37AD02-01S | DVD SHIELDING BOTTOM | 1 | Piece | S |
| 27> | 481-L37AD11-01S | POWER SHIELDING BOTTOM L37AD S | 1 | Piece | S |
| 28> | 483-L32AB22-01S | SHIELDING COVER | 1 | Piece | S |
| 29> | 486-M32111-01 | NAME PLATE M AKAI | 1 | Piece | S |
| 30> | 522-421D01-01 | MASKING PAPER | 1 | Piece | S |
| 31> | 563-119- | SERIAL NO. LABEL | 1 | Piece | S |

Spare part list of LCT3701AD

| Item | Part Number | Part Description | Usage / unit | Unit | Key/Spare |
|---|---|---|---|---|---|
| 32> | 568-P46T02-02 | WARNING LB ENG 42SF NIL | 1 | Piece | S |
| 33> | 579-42D102-09 | SERIAL NO/BAR CODE LABEL 42D1 | 1 | Piece | S |
| 34> | 579-42D105-01 | PROTECTIVE EARTH LABEL FOR ESA 42TD1 | 1 | Piece | S |
| 35> | 579-L32AD03-02 | CLASS I LASER PRODUCT LOGO | 1 | Piece | S |
| 36> | 579-L32AD04-01 | LASER WARNING LABEL AKAI LC32AD | 1 | Piece | S |
| 37> | 579-L37AD01-03AP | BAR CODE NO LABEL (W/SERIAL NO) FOR LCT3701AD USA P | 2 | Piece | S |
| 38> | 590-L37AD01-02AP | WARRANTY CARD AKAI ENG LCT3701AD USA P | 1 | Piece | S |
| 39> | 593-L37AD01-02AP | AKAI INSERTION CARD ENG LCT3701AD USA P | 1 | Piece | S |
| 40> | E3219-002003 | EI I LET EMI FILTER WIT WIRES IOSSI-R-Q(B) HIGH&LOW | 1 | Piece | S |
| 41> | E3404-157004 | AC CORD UL 1.88M (YY-3/ST3 YUNBIAO) | 1 | Piece | S |
| 42> | E3407-081001 | CORD FFC P0.5 50P L=110 B-0.5-50X110-4(8)X4(8)-0.3X0.035 | 1 | Piece | S |
| 43> | E3421-229007 | WIRE ASSY 1H3.96-2KN3 0N2 L400 CJ 3P 27"LCD | 1 | Piece | S |
| 44> | E3421-924009 | WIRE ASSY 2P L120 | 2 | Piece | S |
| 45> | E3421-925061 | WIRE ASSY 300MM 3WIRES #20 1617 FOR 32LCD COMBO POWER INPUT | 1 | Piece | S |
| 46> | E3421-925127 | WIRE ASSY TJC3-2Y L860 SPK-R MT8202 | 1 | Piece | S |
| 47> | E3421-925128 | WIRE ASSY 16P/2.0 FOR MT8202 POWER 5V/12V | 1 | Piece | S |
| 48> | E3421-925138 | WIRE ASSY P2.5/4P 4P2.0 L360MM AMP 24V MT8202 37" COMBO | 1 | Piece | S |
| 49> | E3421-925139 | WIRE ASSY TJC3-3Y L720MM LCD37" MT8202 SPK-L | 1 | Piece | S |
| 50> | E3421-926119 | WIRE ASSY P2.0 8P L=215 TV/SIF | 1 | Piece | S |
| 51> | E3461-064039 | WIRE ASSY 5P2.5 L560MM 5V 3.3V SIGNAL WIRE EMI MT8202 | 1 | Piece | S |
| 52> | E3461-064040 | WIRE ASSY P2.0 14P/3P2.0/8P2.5 L400MM/L700MM INVERTER MT8202 | 1 | Piece | S |
| 53> | E3461-064042 | WIRE ASSY 1H2.5-2H2.0 20099 L350 7P/5P FOR MT8202 37" STANDBY | 1 | Piece | S |
| 54> | E3471-000048 | WIRE WS SHIELD WIRE FOR 32LCD TV+COMBO KEY WIRE FOR DVD | 1 | Piece | S |
| 55> | E3471-000054 | WIRE WS SHIELD 6P2.0/2P2.5/8P2.0 L440MM COMBO 37LCD MT8202 | 1 | Piece | S |
| 56> | E3471-000055 | WIRE WS SHIELD 11P/10P2.0 TV+COMBO DVD 37LCD MT8202 L480MM | 1 | Piece | S |
| 57> | E3471-000056 | WIRE WS SHIELD FOR37LCD COMBO MICO KEY 13P/8P+5P L650/L750MM W/EMI | 1 | Piece | S |
| 58> | E3471-001002 | WIRE WS SHIELD P1.0 0P L=220 FOR CPT LCD37" | 1 | Piece | S |
| 59> | E4101-027001 | SWITCH POW MR-22-N2BB-F2 ROCKET | 1 | Piece | S |
| 60> | E4801-124001 | SPEAKER 8 OHM 10W D3" YD78-1 | 2 | Piece | S |
| 61> | E4802-014001 | TWEETER 6 OHM 10W D2" YD52-1 | 2 | Piece | S |
| 62> | E6203-37TD01 | DISPLAY LCD 37" CPT WXGA CLAA370WA02 | 1 | Piece | S |
| 63> | E7301-010002 | BATTERY AAA R03P1.5V <2> | 2 | Piece | S |

Spare part list of LCT3701AD

| Item | Part Number | Part Description | Usage / unit | Unit | Key/Spare |
|---|---|---|---|---|---|
| 64> | E7801-D01001 | DVD PCB ASSY MICO FOR MT8202 | 1 | SET | S |
| 65> | E7801-P02003 | PCB ASSY PSU BOARD MEGMEET MLT386X FOR 37LCD AC110-240V OUTPUT 12V/8V/24V 250W | 1 | SET | S |
| 66> | 734-L37AD03-02 | PLASTIC BASE LCD37" SILVER | 1 | SET | S |
| 67> | 771BL27AD01-01 | IR RECEIVE PCB ASSY FOR LCT27AD ATSC & DVD S-MT8202G | 1 | SET | S |
| 68> | 771KL27AD01-01 | KEY PCB ASSY FOR TV S-MT8202G ATSC & DVD | 1 | SET | S |

# If you forget your V-Chip Password

- Omnipotence V-Chip Password: 8202.

Using the “Change Password” item

1. When enter the “V-Chip” menu, select “Change Password”.
2. Press ▲ or ▼ button to highlight the “Change Password” item.
3. Press **Enter** button to confirm and pop up a menu.

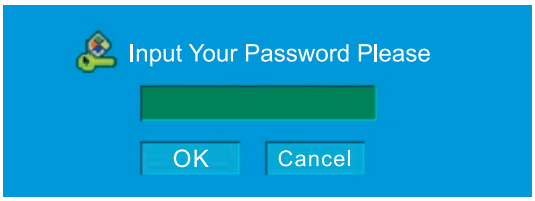


4. Use 0~9 buttons input the omnipotence password(8202), then Press **Enter** button to enter and pop up a menu.

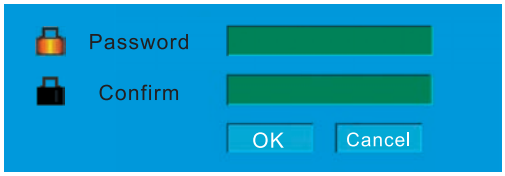


5. Use 0~9 buttons input your new password.
6. Press ▼ button to move to confirm blank.
7. Use 0~9 buttons input your new password again.
8. Press **Enter** button to confirm

-Suggest: Change to your familiar Password again.

# Software Upgrade

## Process of update MT8202

### Preparing :

1. Connect **RS232-VGA download line**, One connector is connected to **VGA connect port of LCD TV** ,while another side is connected to PC COM port.
2. Store the MtkTool into the PC .

### Downloading :

3. Turn on AC power switch of the LCD TV and then press the button “standby” of the remote control . The image could be found on the screen of the LCD TV while the color of the power indicator is green . (the mode of the LCD TV will be standby mode if after turn on the main power switch only . )
4. Execute MTKtool and select the chipset as MT8202. (the software of MTKtool will be sent to your side)

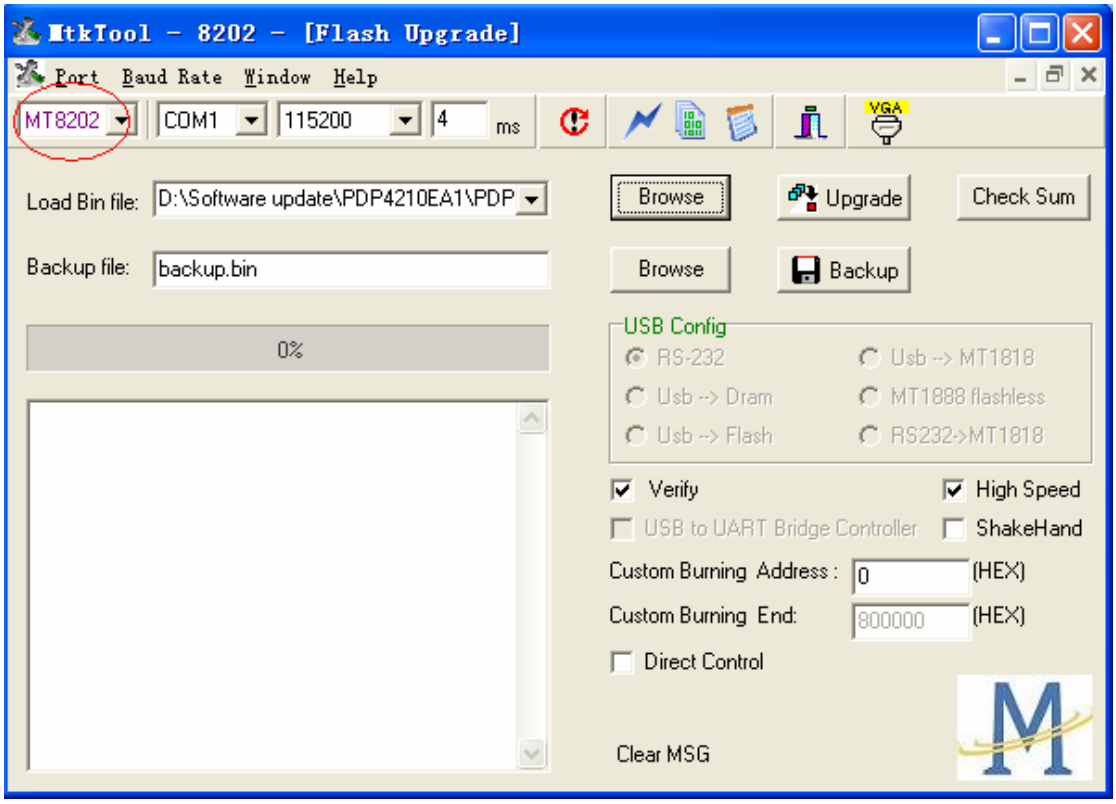


5. Select current COM port. (please try to check the COM port of your PC).

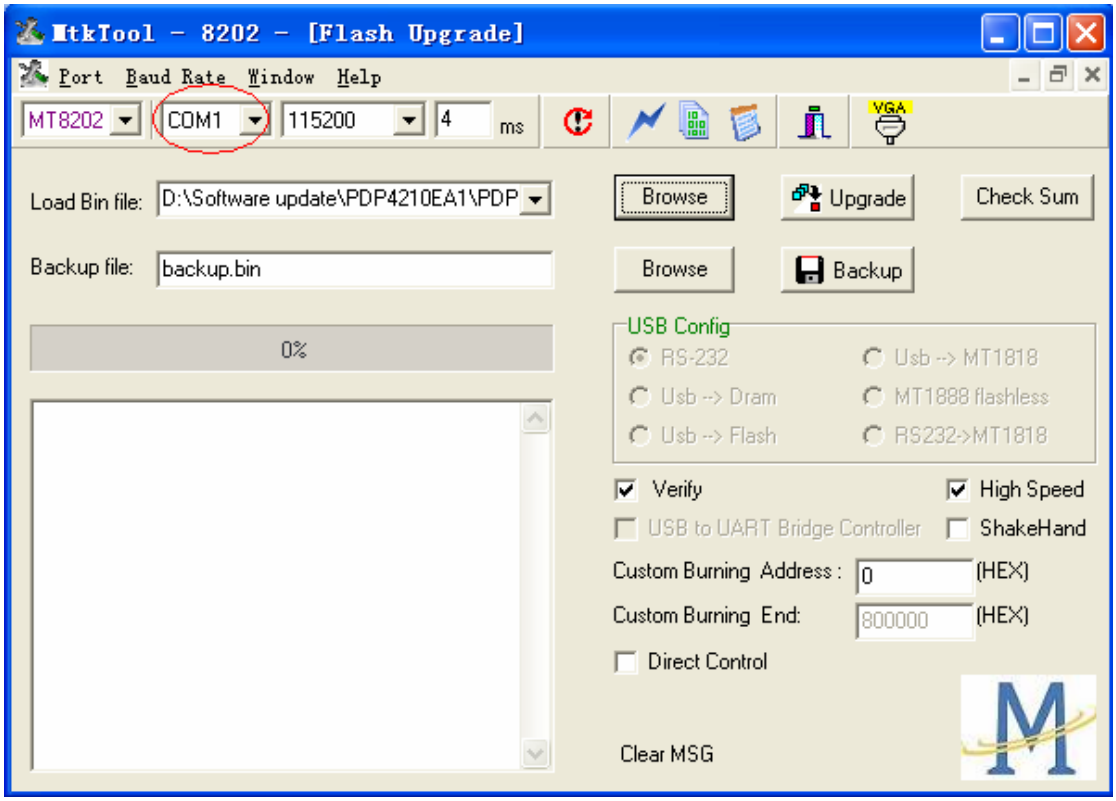


**6.** Choose the bit rate as 115200.

**7.** Select the update binary by pressing browse button. For exemple,the binary file name is PDP4210EA1_V09.bin. (this update firmware will be sent to your side)

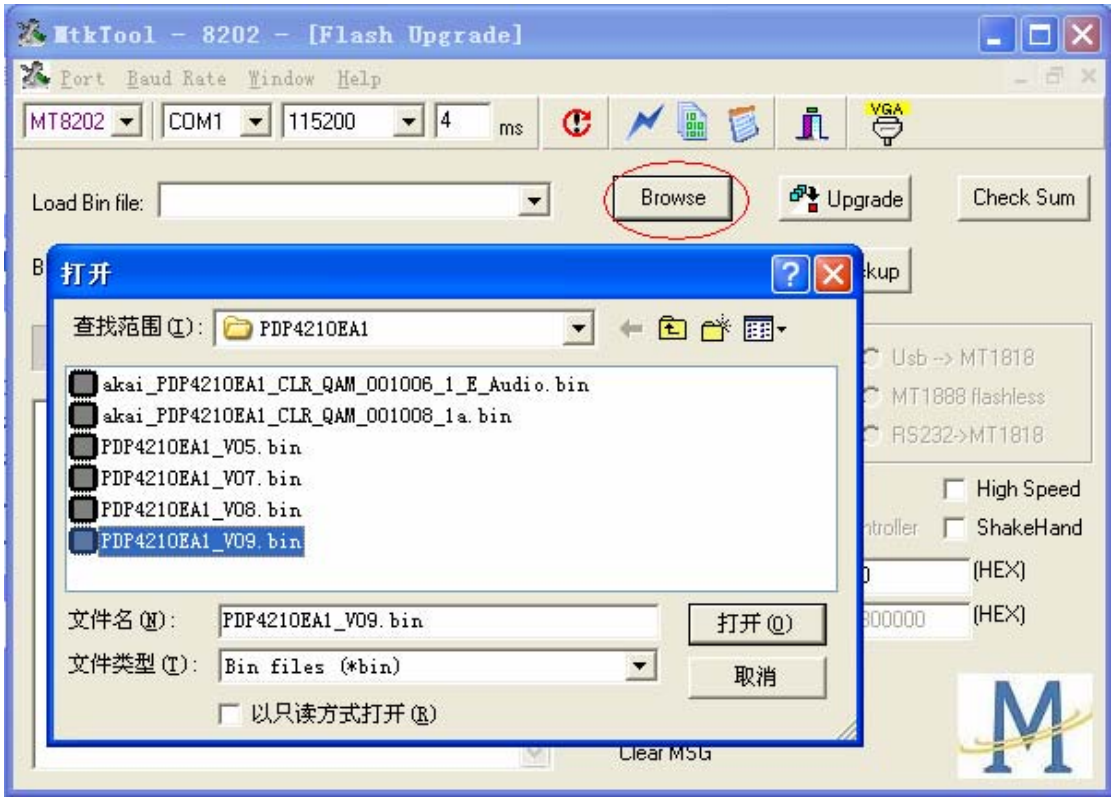


**8.** Press Upgrade button and start update process.

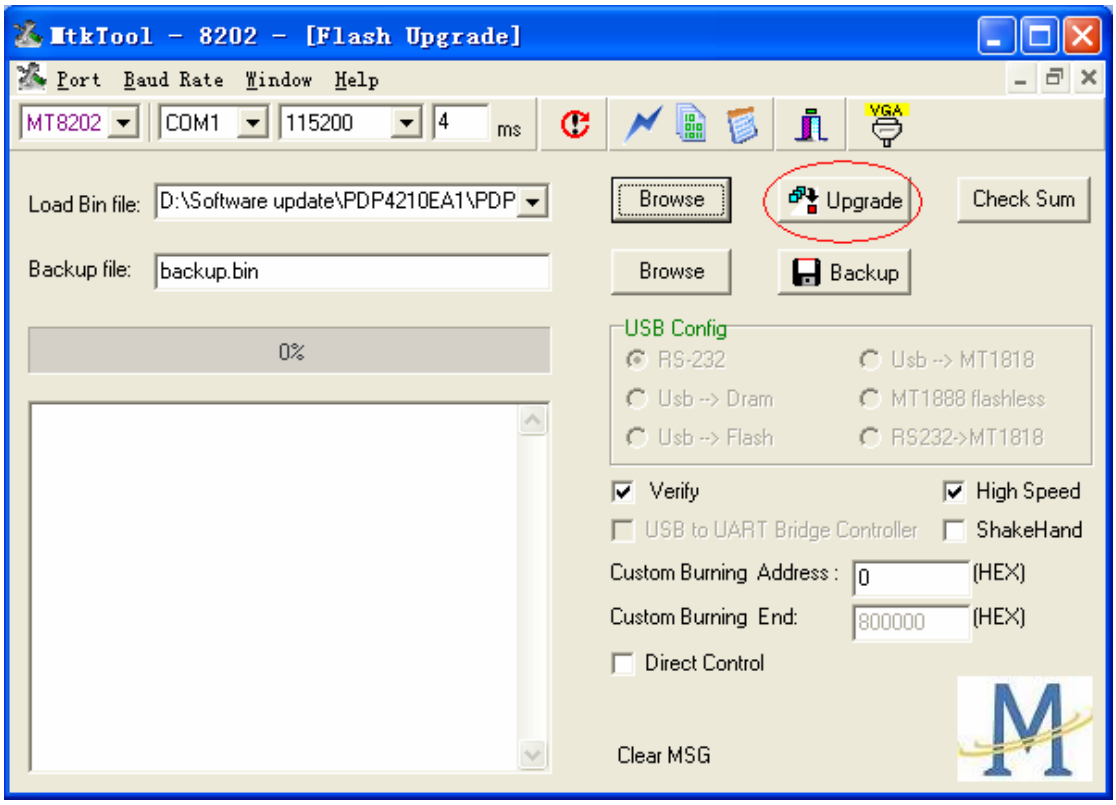


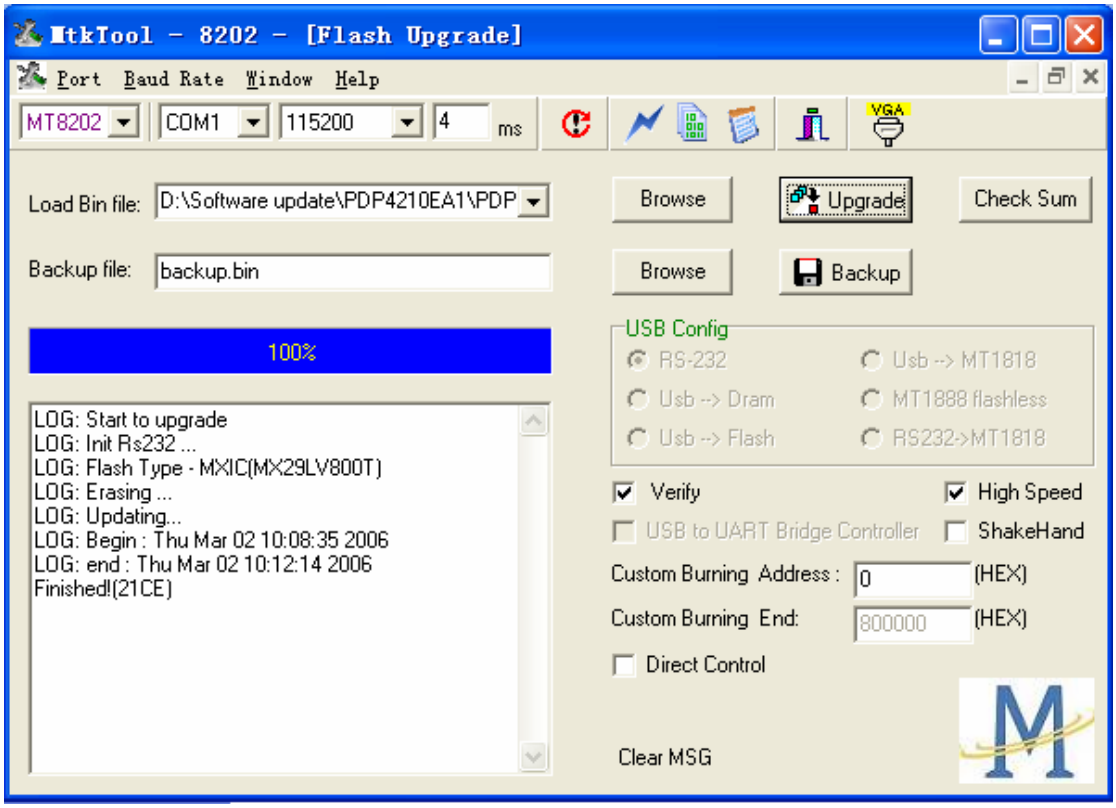


**9.** The update process is successful as the progress bar is 100%. After the update process is ok,

turn off power and wait indicator light is off. Turn on power and TV can work.

## Checking

It is needed to check the version of the firmware for MT8202 which has been download into the LCD TV .

Press Menu button of the remote control，following input “8202”of the remote control and OSD menu for Factory Setting is appeared on the screen .

Use the remote control and select the mode of Firmware Version and then enter the mode of Firmware Version . It is easy to be found the version of the current firmware for MT8202 is as the following : “Factory ID : LCT3701AD_VXX ”

# Process of update MT5351AG

## Preparing :

1. Connect **RS232 download line**, One connector is connected to **RS232 connect port of LCD TV** ， while another side is connected to PC COM port.
2. Store the MtkTool into the PC

## Downloading :

3. Turn on AC power switch of the LCD TV and then press the button “standby” of the remote control . The image could be found on the screen of the LCD TV while the color of the power indicator is green . (the mode of the LCD TV will be standby mode if after turn on the main power switch only . )
4. Execute MTKtool and select the chipset as MT5351AG. (the software of MTKtool will be sent to your side)

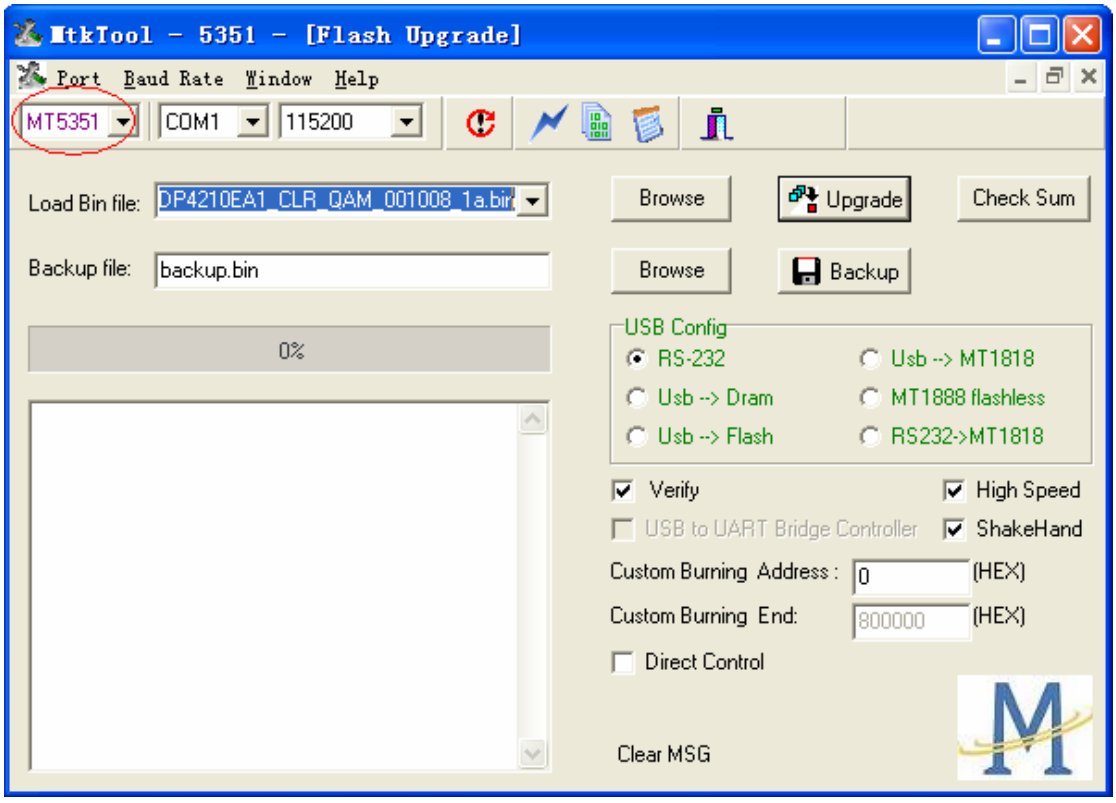


**5.** Select current COM port. (please try to check the COM port of your PC).

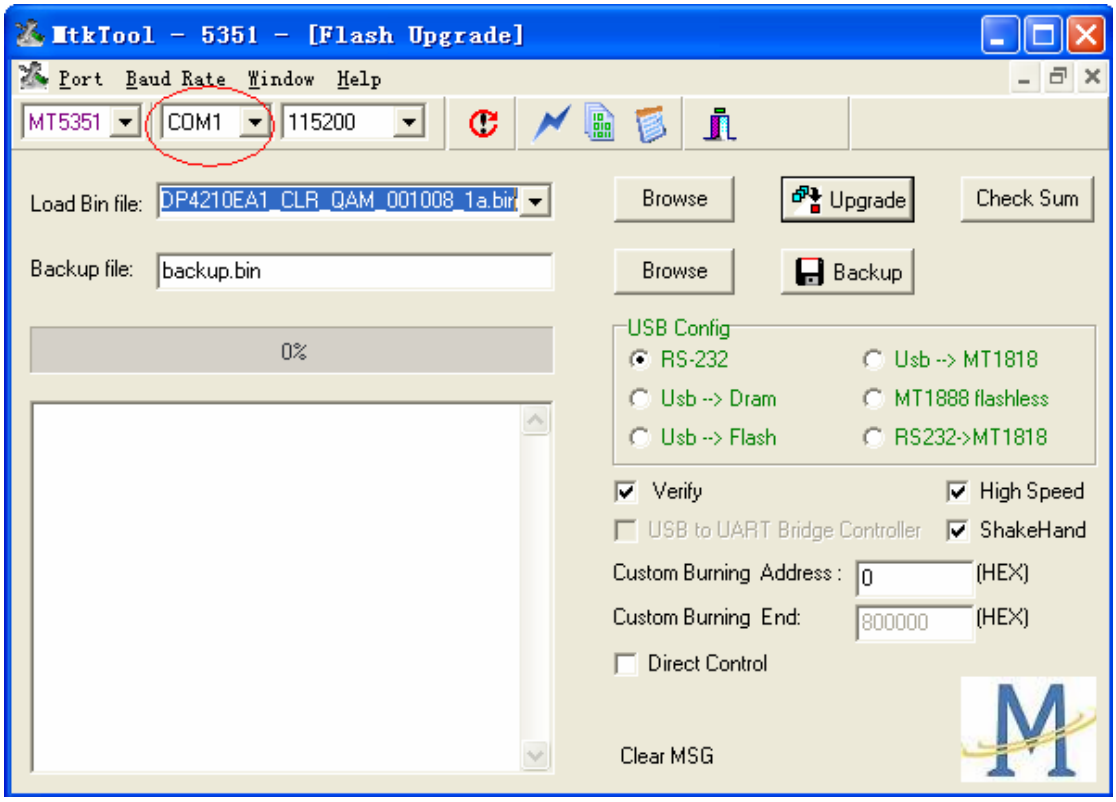


**6.** Choose the bit rate as 115200.

**7.** Select the update binary by pressing browse button. For exemple,the binary file name is

XXXX_PDP4210EA1_000000XX_X_P.bin. (this update firmware will be sent to your side)

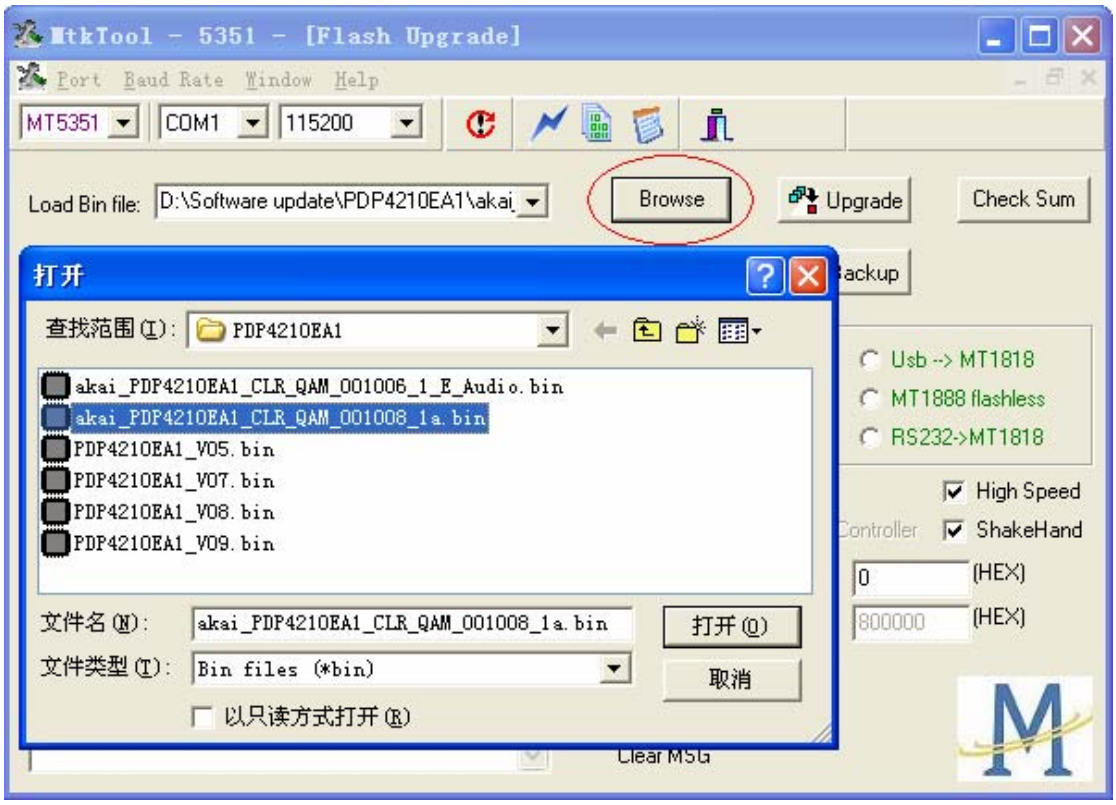


**8.** Press Upgrade button and start update process.

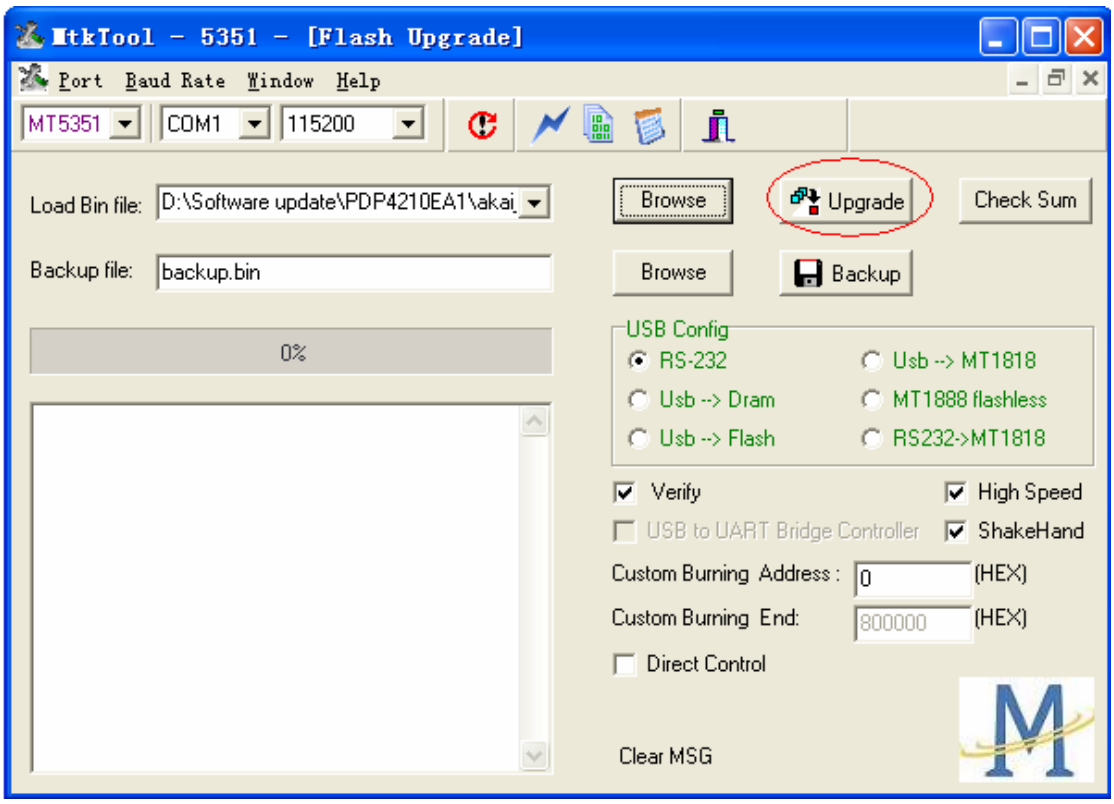

**9.** The update process is successful as the progress bar is 100%. After the update process is ok, turn off power and wait indicator light is off. Turn on power and TV can work.

## Checking :

It is needed to check the version of the firmware for MT5351AG which has been download into the LCD TV .

Press Menu button of the remote control and the main OSD menu is appeared on the screen .

Use the remote control and select the DTV menu . following input “0000” (zero , zero , zero , zero) of the remote control .Then enter the mode of factory after input the digits .
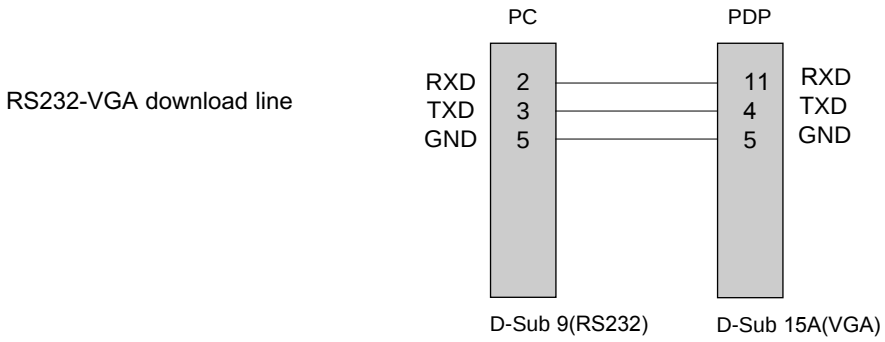
It is easy to be found the version of the current firmware for MT5351AG is “LCT3701AD CLA_QAM_XXXXXX_XX”under the mode of factory .