KYOCERA mita

FS-9100DN
FS-9500DN

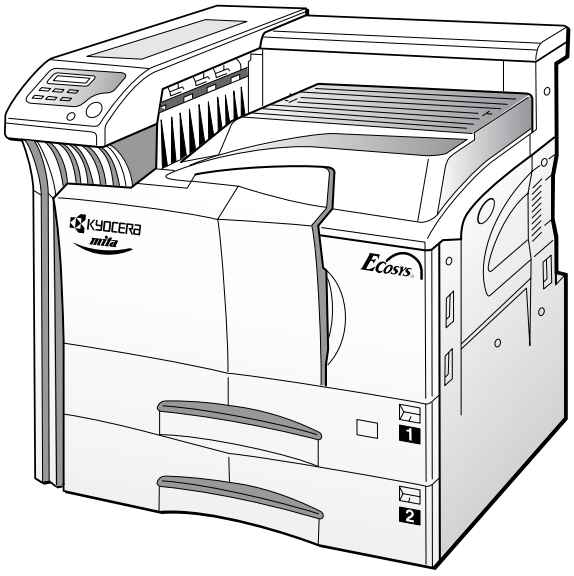

ECOSYS

SERVICE MANUAL

Published in Sep. ’01
842BL110
2BL70760
Revision 2.1

Revision history

Version	Date	Replaced pages	Remarks
1.0	July-2001	-	-
2.0	31-Jan-2002	-	-
2.1	3-Apr-2002	1-5-51	-

Safety precautions

This booklet provides safety warnings and precautions for our service personnel to ensure the safety of their customers, their machines as well as themselves during maintenance activities. Service personnel are advised to read this booklet carefully to familiarize themselves with the warnings and precautions described here before engaging in maintenance activities.

Safety warnings and precautions

Various symbols are used to protect our service personnel and customers from physical danger and to prevent damage to their property. These symbols are described below:

⚠**DANGER**: High risk of serious bodily injury or death may result from insufficient attention to or incorrect compliance with warning messages using this symbol.

⚠**WARNING**:Serious bodily injury or death may result from insufficient attention to or incorrect compliance with warning messages using this symbol.

⚠**CAUTION**: Bodily injury or damage to property may result from insufficient attention to or incorrect compliance with warning messages using this symbol.

Symbols

The triangle (△) symbol indicates a warning including danger and caution. The specific point of attention is shown inside the symbol.

General warning.

Warning of risk of electric shock.

Warning of high temperature.

⃠ indicates a prohibited action. The specific prohibition is shown inside the symbol.

General prohibited action.

Disassembly prohibited.

● indicates that action is required. The specific action required is shown inside the symbol.

General action required.

Remove the power plug from the wall outlet.

Always ground the printer.

1. Installation Precautions

⚠ WARNING

- Do not use a power supply with a voltage other than that specified. Avoid multiple connections to one outlet: they may cause fire or electric shock. When using an extension cable, always check that it is adequate for the rated current. .....

- Connect the ground wire to a suitable grounding point. Not grounding the printer may cause fire or electric shock. Connecting the earth wire to an object not approved for the purpose may cause explosion or electric shock. Never connect the ground cable to any of the following: gas pipes, lightning rods, ground cables for telephone lines and water pipes or faucets not approved by the proper authorities. .....

⚠ CAUTION:

- Do not place the printer on an infirm or angled surface: the printer may tip over, causing injury. ....

- Do not install the printer in a humid or dusty place. This may cause fire or electric shock. .....

- Do not install the printer near a radiator, heater, other heat source or near flammable material. This may cause fire. .....

- Allow sufficient space around the printer to allow the ventilation grills to keep the machine as cool as possible. Insufficient ventilation may cause heat buildup and poor copying performance. .....

- Always handle the machine by the correct locations when moving it. .....

- Always use anti-toppling and locking devices on printers so equipped. Failure to do this may cause the printer to move unexpectedly or topple, leading to injury. .....

- Avoid inhaling toner or developer excessively. Protect the eyes. If toner or developer is accidentally ingested, drink a lot of water to dilute it in the stomach and obtain medical attention immediately. If it gets into the eyes, rinse immediately with copious amounts of water and obtain medical attention. .....

- Advice customers that they must always follow the safety warnings and precautions in the printer's instruction handbook. .....

2. Precautions for Maintenance

⚠WARNING

- Always remove the power plug from the wall outlet before starting machine disassembly. .....

- Always follow the procedures for maintenance described in the service manual and other related brochures. .....

- Under no circumstances attempt to bypass or disable safety features including safety mechanisms and protective circuits. .....

- Always use parts having the correct specifications. .....

- Always use the thermostat or thermal fuse specified in the service manual or other related brochure when replacing them. Using a piece of wire, for example, could lead to fire or other serious accident. .....

- When the service manual or other serious brochure specifies a distance or gap for installation of a part, always use the correct scale and measure carefully. .....

- Always check that the printer is correctly connected to an outlet with a ground connection. .....

- Check that the power cable covering is free of damage. Check that the power plug is dust-free. If it is dirty, clean it to remove the risk of fire or electric shock. .....

- Never attempt to disassemble the optical unit in machines using lasers. Leaking laser light may damage eyesight. .....

- Handle the charger sections with care. They are charged to high potentials and may cause electric shock if handled improperly. .....

⚠CAUTION

- Wear safe clothing. If wearing loose clothing or accessories such as ties, make sure they are safely secured so they will not be caught in rotating sections. .....

- Use utmost caution when working on a powered machine. Keep away from chains and belts. .....

- Handle the fixing section with care to avoid burns as it can be extremely hot. .....

- Check that the fixing unit thermistor, heat and press rollers are clean. Dirt on them can cause abnormally high temperatures. .....

- Do not remove the ozone filter, if any, from the printer except for routine replacement. .....

• Do not pull on the AC power cord or connector wires on high-voltage components when removing them; always hold the plug itself. .....

• Do not route the power cable where it may be stood on or trapped. If necessary, protect it with a cable cover or other appropriate item. .....

• Treat the ends of the wire carefully when installing a new charger wire to avoid electric leaks. .....

• Remove toner completely from electronic components. .....

• Run wire harnesses carefully so that wires will not be trapped or damaged. .....

• After maintenance, always check that all the parts, screws, connectors and wires that were removed, have been refitted correctly. Special attention should be paid to any forgotten connector, trapped wire and missing screws. .....

• Check that all the caution labels that should be present on the machine according to the instruction handbook are clean and not peeling. Replace with new ones if necessary. .....

• Handle greases and solvents with care by following the instructions below: .....
  · Use only a small amount of solvent at a time, being careful not to spill. Wipe spills off completely.
  · Ventilate the room well while using grease or solvents.
  · Allow applied solvents to evaporate completely before refitting the covers or turning the main switch on.
  · Always wash hands afterwards.

• Never dispose of toner or toner bottles in fire. Toner may cause sparks when exposed directly to fire in a furnace, etc. .....

• Should smoke be seen coming from the printer, remove the power plug from the wall outlet immediately. .....

3. Miscellaneous

⚠WARNING

• Never attempt to heat the drum or expose it to any organic solvents such as alcohol, other than the specified refiner; it may generate toxic gas. .....

CONTENTS

1-1 Specifications

1-1-1 Specifications 1-1-1
1-1-2 Parts names 1-1-3
(1) Printer 1-1-3
(2) Operator panel 1-1-4
1-1-3 Machine cross section 1-1-5
1-1-4 Drive system 1-1-6
(1) Drive system 1 (drive motor and eject motor drive trains) 1-1-6
(2) Drive system 2 (paper feed motor drive train) 1-1-7

1-1-1 Specifications

Type	Desktop laser printer
Printing system	Electro photographic system
Paper	Cassette: Plain paper (60 to 90 g/m^2) MP tray: Plain paper (60 to 90 g/m^2), Thick paper (90 to 200 g/m^2) Special paper: Transparencies, tracing paper, colored paper, letterhead and envelopes Note: Use the MP tray for special paper.
Printing sizes	Maximum: A3/Ladger Minimum: A5R /5$^1/_2$" × 8$^1/_2$" (When the MP tray is used)
Print speed	FS-9100DN model [Cassette/MP tray] A4: 36 pages/33 pages per min. B4: 22 pages/19 pages per min. A3: 19 pages/16 pages per min. Letter: 36 pages/33 pages per min. Legal: 22 pages/19 pages per min. Ledger: 19 pages/16 pages per min. Duplex print A4/Letter: 29 pages per min. FS-9500DN model [Cassette/MP tray] A4: 50 pages/46 pages per min. B4: 31 pages/27 pages per min. A3: 26 pages/22 pages per min. Letter: 50 pages/46 pages per min. Legal: 31 pages/27 pages per min. Ledger: 26 pages/22 pages per min. Duplex print A4/Letter: 37 pages per min.
First print time	7 s or less (A4, Ecopower mode off) 67 s or less (A4, Ecopower mode on)
Warm-up time	60 s or less (room temperature 23 °C/73.4 °F, 60% RH)
Paper feed system	2 universal type cassettes, and MP tray
Paper loading capacity	Cassette: 500 sheets (80 g/m^2, 0.11 mm) MP tray: 200 sheets (80 g/m^2, 0.11 mm)
Printout stacking capacity	Face down tray: 500 sheets with paper full sensor
Photoconductor	aSi drum (diameter 40 mm)
Charging system	Single positive corona charging
Exposure light source	Semiconductor laser
Exposure scanning system	Polygon mirror
Developing system	Dry, reverse developing (magnetic brush) Developer: 1-component, magnetism toner Toner replenishing: automatic from a toner container
Transfer system	Transfer roller
Separation system	Separation electrode
Fixing system	Heat roller and press roller Heat source: halogen heaters (120 V specifications: main 600 W, sub 400 W/220-240 V specifications: main 600 W, sub 420 W, Control temperature: 165 °C/329 °F (at normal ambient temperature) Abnormally high temperature protection device: 170 °C/338 °F thermostats Fixing pressure: 107.8 N
Charge erasing system	Exposure by cleaning lamp (LED array)
Cleaning system	Cleaning blade
Controller hardware	CPU: Power PC750CX 350 MHz (FS-9100DN model) Power PC750CX 400 MHz (FS-9500DN model) Code ROM: 4 MB (2 system DIMM PWBs in sockets) Font ROM: 4 MB (PCL6 and KPDL3) Main RAM: 32 MB (standard) Option expanding RAM: 2 sockets (Maximum 288 MB, including the standard RAM) Option memory card: 1 slot (CompactFlash card) Option interface: 2 slots (KUIO-LV)

FS-9100DN/9500DN

Host computer interface	Parallel: Bi-directional parallel (IEEE 1284 Nibble/ECP mode) Serial: RS-232C Network: 10Base-T/100Base-TX Option network interface card (KUIO slot No. 2): 10Base-T/100Base-TX/10Base-2
Controller software	Emulation: PCL6, KPDL3, KCGL Fonts: PCL6, KPDL3
Smoothing	KIR
Toner saving	EcoPrint mode
Resolution	Fast 1200 mode with KIR, 600 dpi with KIR, 300 dpi with KIR
Dimensions	Printer main unit: 585 (W) × 639 (D) × 615 (H) mm $23\frac{1}{16}$" (W) × $25\frac{3}{16}$" (D) × $24\frac{3}{16}$" (H) Paper feeder PF-70: 560 (W) × 566 (D) × 251 (H) mm $21\frac{5}{8}$" (W) × $22\frac{1}{16}$" (D) × $17\frac{15}{16}$" (H) Paper feeder PF-75: 560 (W) × 566 (D) × 251 (H) mm $21\frac{5}{8}$" (W) × $22\frac{1}{16}$" (D) × $17\frac{15}{16}$" (H)
Weight	Printer main unit: 52.5 kg/115.5 lbs (including toner containers) Paper feeder PF-70: 19.1 kg/42 lbs Paper feeder PF-75: 22.1 kg/48.6 lbs
Floor requirements	891 (W) × 560 (D) mm $35\frac{1}{16}$" (W) × $22\frac{1}{16}$" (D)
Functions	Self-diagnostics, sleep mode (energy saving)
Power source	120 V AC, 60 Hz, Max. 10.8 A/10.9 A (FS-9100DN/9500DN) 220 - 240 V AC, 50/60 Hz, Max. 5.6 A/5.7 A (FS-9100DN/9500DN)
Power consumption	Maximum: 1400 W Printing: 680 W/790 W (FS-9100DN/9500DN) Ready: 140 W/150 W (FS-9100DN/9500DN) Sleep mode: 16 W or less
Options	Expanding DIMM (16/32/64/128 MB), compact flash card, hard disk unit HD-3, paper feeder PF-70/75, finisher DF-70/75, barcode reader, network interface card IB-20/21/21E

1-1-2 Parts names

(1) Printer

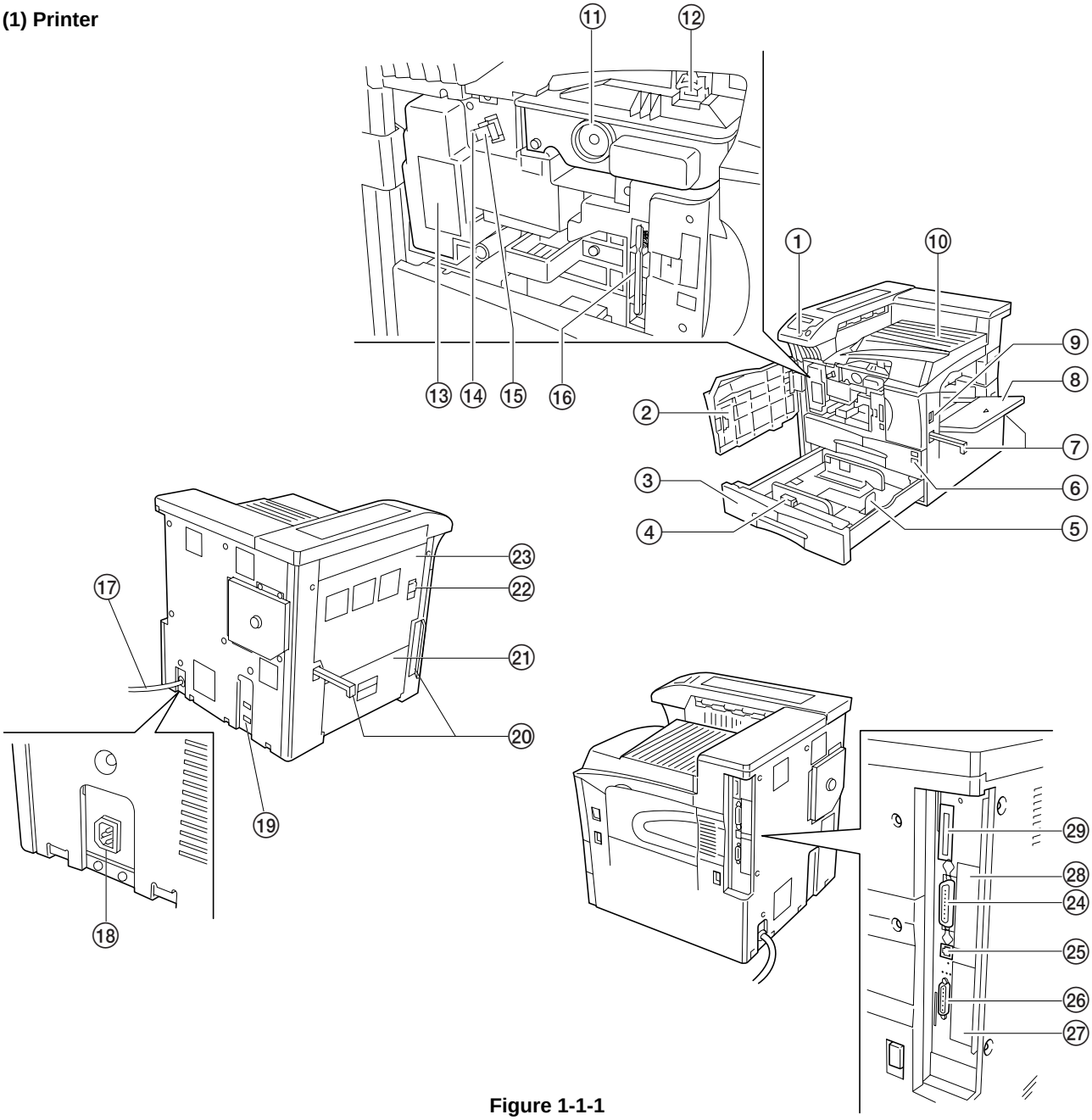

Figure 1-1-1

① Operator panel
② Front cover
③ Lower paper cassette
④ Paper guide
⑤ Paper stopper
⑥ Upper paper cassette
⑦ Handles for transport
⑧ MP (Multi-Purpose) tray
⑨ Power switch
⑩ Face-down tray
⑪ Toner container
⑫ Toner container release lever
⑬ Waste toner box
⑭ Cleaning knob
⑮ Main charger unit
⑯ Cleaning brush
⑰ Power cord
⑱ Power cord connector
⑲ Option unit connector
⑳ Handles for transport
㉑ Side cover
㉒ Conveying cover lock lever
㉓ Conveying cover
㉔ Parallel cable connector
㉕ Network cable connector
㉖ Serial cable connector
㉗ Optional hard disk unit slot (OPT1/HDD)
㉘ Optional network interface card slot (OPT2)
㉙ Memory card slot

(2) Operator panel

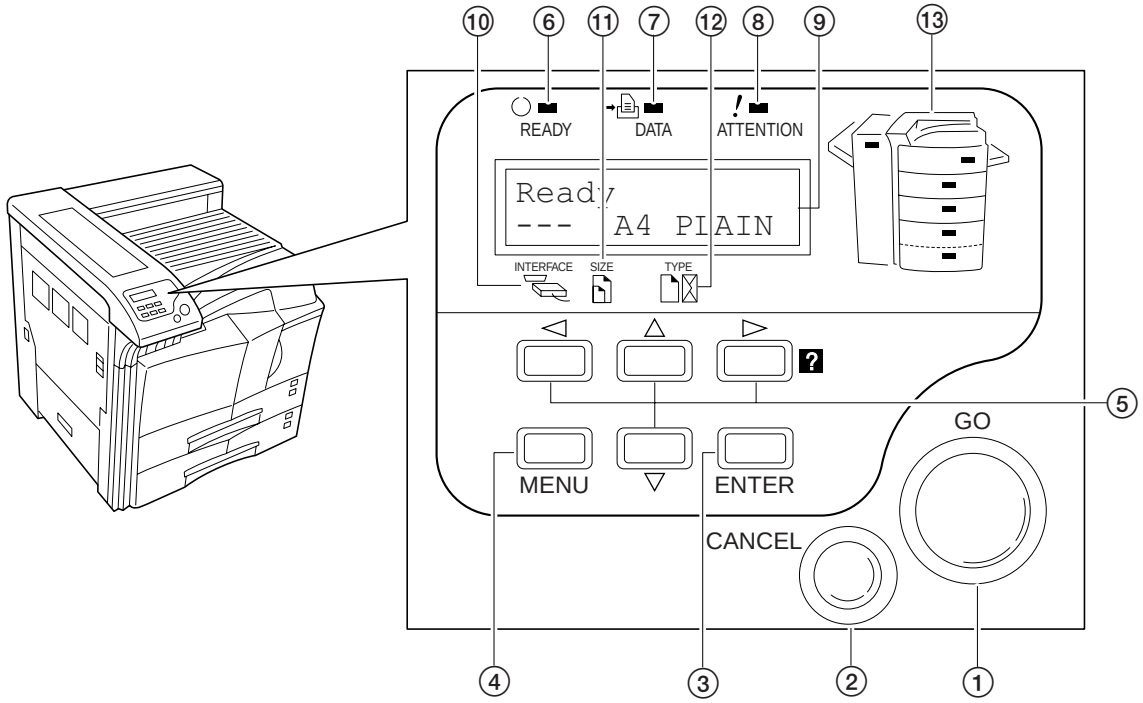

Figure 1-1-2

① GO key
② CANCEL key
③ ENTER key
④ MENU key
⑤ Arrow keys
⑥ Ready indicator
⑦ Data indicator
⑧ Attention indicator
⑨ Message display
⑩ Interface indicator
⑪ Paper size indicator
⑫ Paper type indicator
⑬ Paper jam indicator

1-1-3 Machine cross section

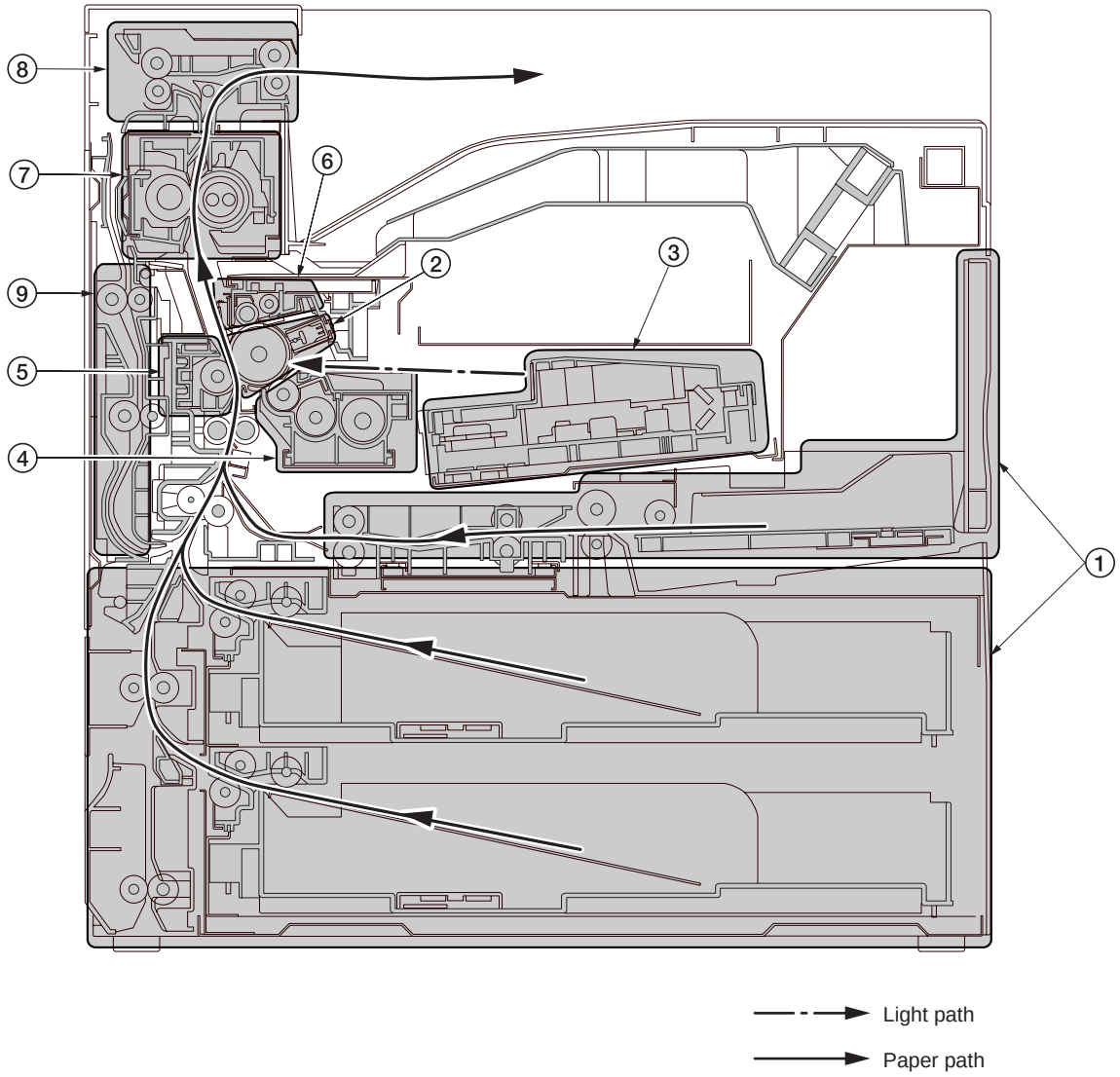

Figure 1-1-3 Machine cross section

① Paper feed section
② Main charging section
③ Laser scanner unit
④ Developing section
⑤ Transfer and paper conveying section
⑥ Cleaning and erasing section
⑦ Fuser section
⑧ Eject and switchback section
⑨ Duplex unit

1-1-4 Drive system

(1) Drive system 1 (drive motor and eject motor drive trains)

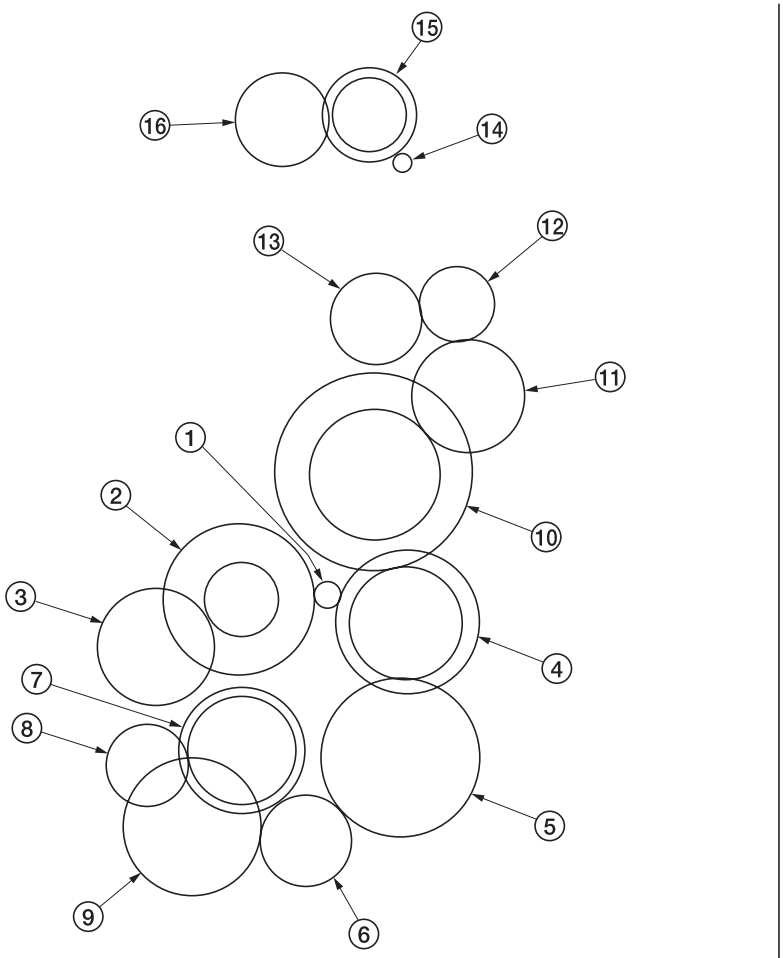

As viewed from machine rear

Figure 1-1-4

① Drive motor gear
② Drum gear Z76H/Z30H
③ Drum gear Z70H
④ Gear Z76H/Z35H
⑤ Gear Z50H
⑥ Gear Z36S/Z31H
⑦ Gear Z37H/28H
⑧ Gear Z34H
⑨ Registration clutch gear
⑩ Gear Z63H/Z45S
⑪ Gear Z37S
⑫ Gear Z24S
⑬ Joint gear Z32S
⑭ Eject motor gear
⑮ Gear Z47S/Z28S
⑯ Eject gear Z30S

(2) Drive system 2 (paper feed motor drive train)

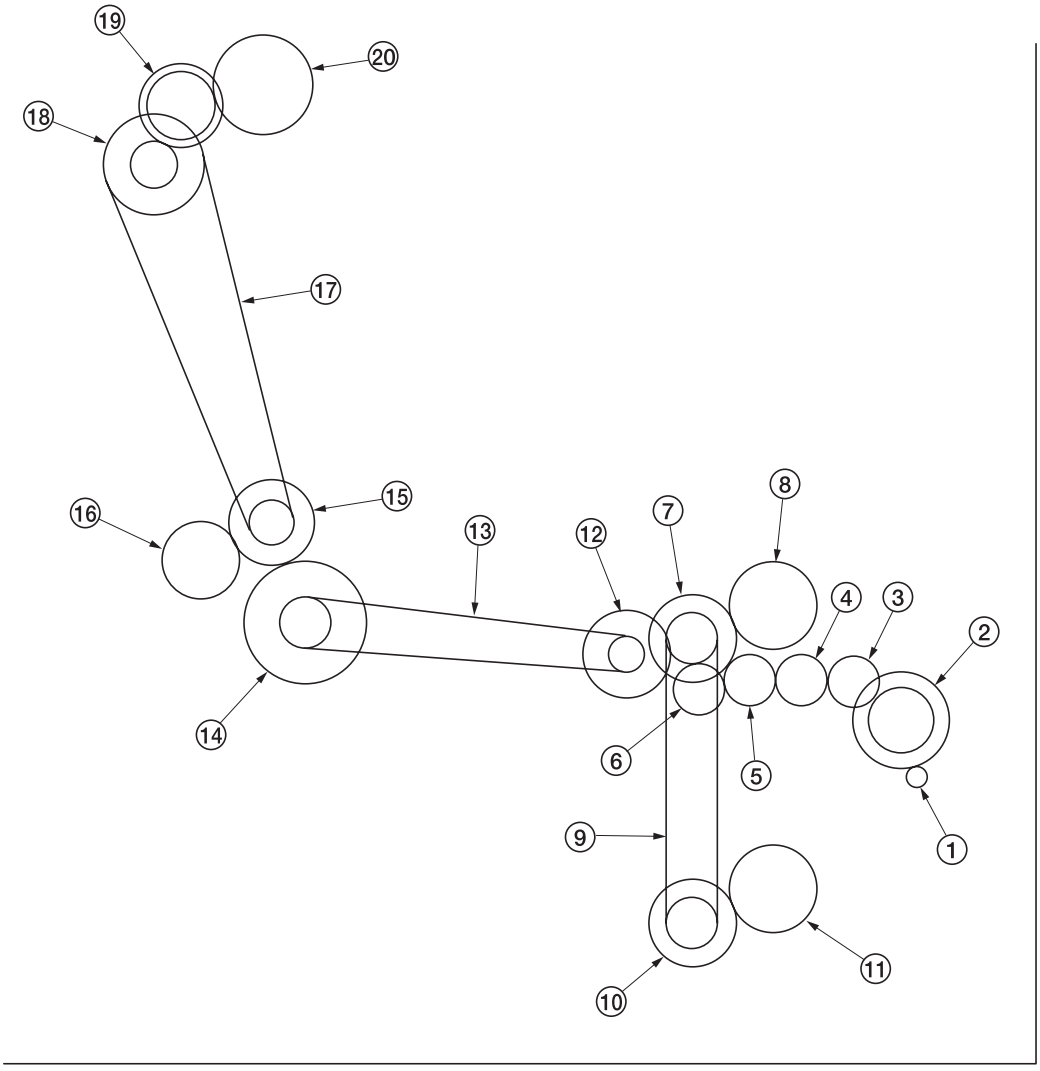

As viewed from machine rear

Figure 1-1-5

① Paper feed motor gear
② Gear Z76H/Z35S
③ Feed gear Z25
④ Feed gear Z25
⑤ Feed gear Z25
⑥ Feed gear Z25
⑦ Gear Z41S/Z24S/P30
⑧ Upper paper feed clutch gear
⑨ Paper feed drive belt
⑩ Gear Z41S/Z24S/P30
⑪ Lower paper feed clutch gear
⑫ Gear Z41S/P15
⑬ Bypass drive belt
⑭ Gear Z60S/P20
⑮ Gear Z41S/P18
⑯ Gear Z40S/Z32S
⑰ Container drive belt
⑱ Gear Z24S/P40
⑲ Gear Z40S/Z25S
⑳ Container gear

CONTENTS

1-2 Handling precautions

1-2-1 Drum 1-2-1
1-2-2 Toner 1-2-1
1-2-3 Installation environment 1-2-1

1-2-1 Drum

Note the following when handling or storing the drum.

- When removing the image formation unit, never expose the drum surface to strong direct light.
- Keep the drum at an ambient temperature between –20 °C/–4 °F and 40 °C/104 °F and at a relative humidity not higher than 85% RH. Avoid abrupt changes in temperature and humidity.
- Avoid exposure to any substance which is harmful to or may affect the quality of the drum.
- Do not touch the drum surface with any object. Should it be touched by hands or stained with oil, clean it.

1-2-2 Toner

Store the toner in a cool, dark place. Avoid direct light and high humidity.

1-2-3 Installation environment

1. Temperature: 10 - 32.5 °C/50 - 90.5 °F
2. Humidity: 20 - 80 % RH
3. Power supply: 120 V AC ±10 %, 10.8 A/10.9 A (FS-9100DN/9500DN)
   220 - 240 V AC 10 %, 5.6 A/5.7 A (FS-9100DN/9500DN)
4. Power source frequency: 50 Hz ±0.2 %/60 Hz ±0.2 %
5. Installation location
   - Avoid direct sunlight or bright lighting. Ensure that the photoconductor will not be exposed to direct sunlight or other strong light when removing paper jams.
   - Avoid extremes of temperature and humidity, abrupt ambient temperature changes, and hot or cold air directed onto the machine.
   - Avoid dust and vibration.
   - Choose a surface capable of supporting the weight of the machine.
   - Place the machine on a level surface (maximum allowance inclination: 1 °).
   - Avoid air-borne substances that may adversely affect the machine or degrade the photoconductor, such as mercury, acidic of alkaline vapors, inorganic gasses, NOx, SOx gases and chlorine-based organic solvents.
   - Select a room with good ventilation.
6. Allow sufficient access for proper operation and maintenance of the machine.
   Machine front: 100 cm/39 3/8" Machine rear: 10 cm/3 15/16"
   Machine right: 70 cm/27 9/16" Machine left: 60 cm/23 5/8"

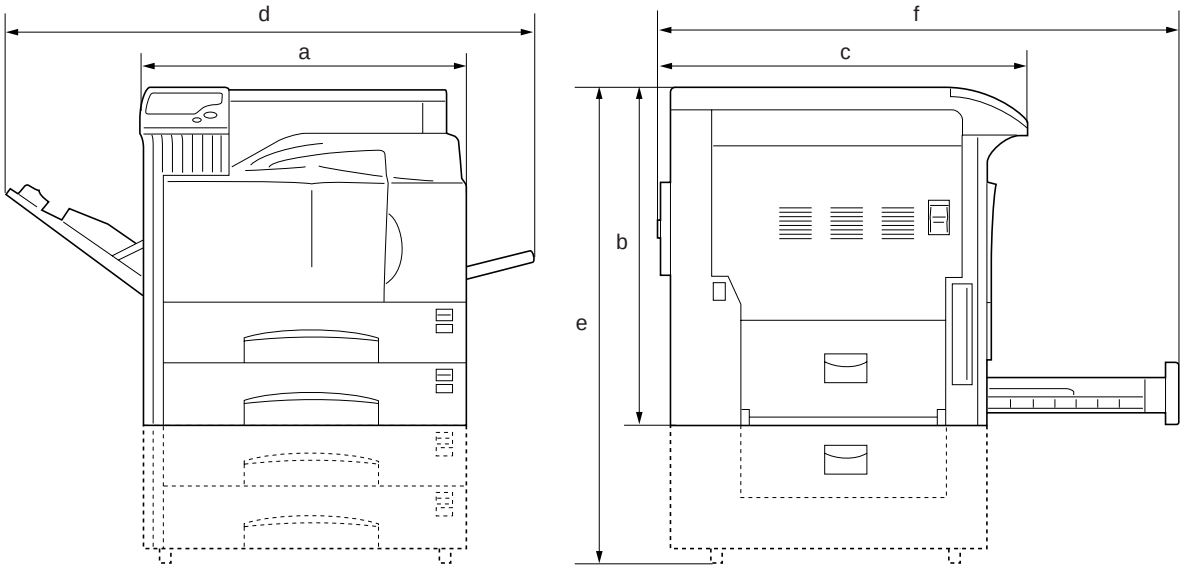

a: 585 mm/23 1/16"
b: 615 mm/24 3/16"
c: 665 mm/26 3/16"
d: 1032 mm/40 5/8"
e: 920 mm/36 1/4"
f: 1055 mm/41 9/16"

Figure 1-2-1 Installation dimensions

CONTENTS

1-3 Installation

1-3-1 Unpacking and installation 1-3-1
(1) Installation procedure 1-3-1
1-3-2 Installing the cassette heater (option) 1-3-9
1-3-3 Installing DIMMs (option) 1-3-11
1-3-4 Installing the network interface card (option) 1-3-12
1-3-5 Installing the hard disk (option) 1-3-13
1-3-6 Installing the memory card (option) 1-3-14

1-3-1 Unpacking and installation

(1) Installation procedure

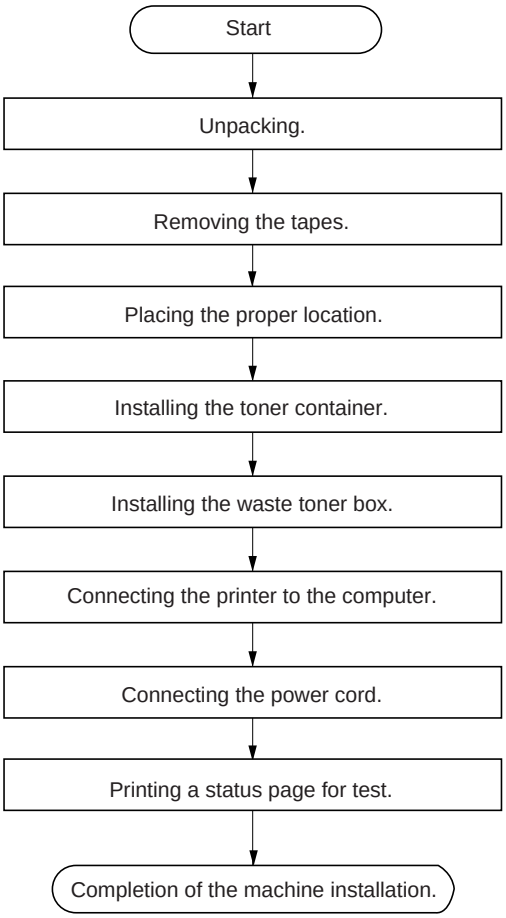

Unpacking.

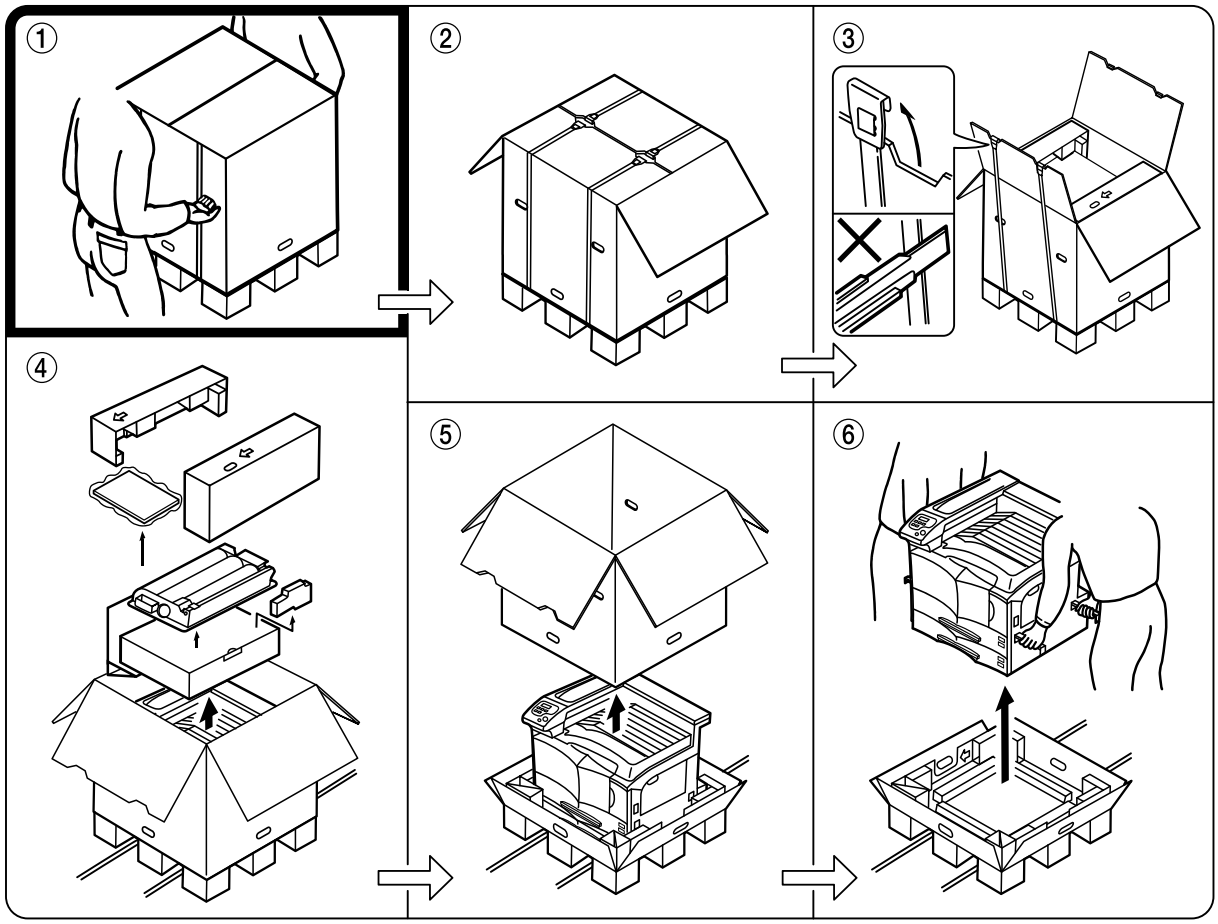

Figure 1-3-1 Unpacking

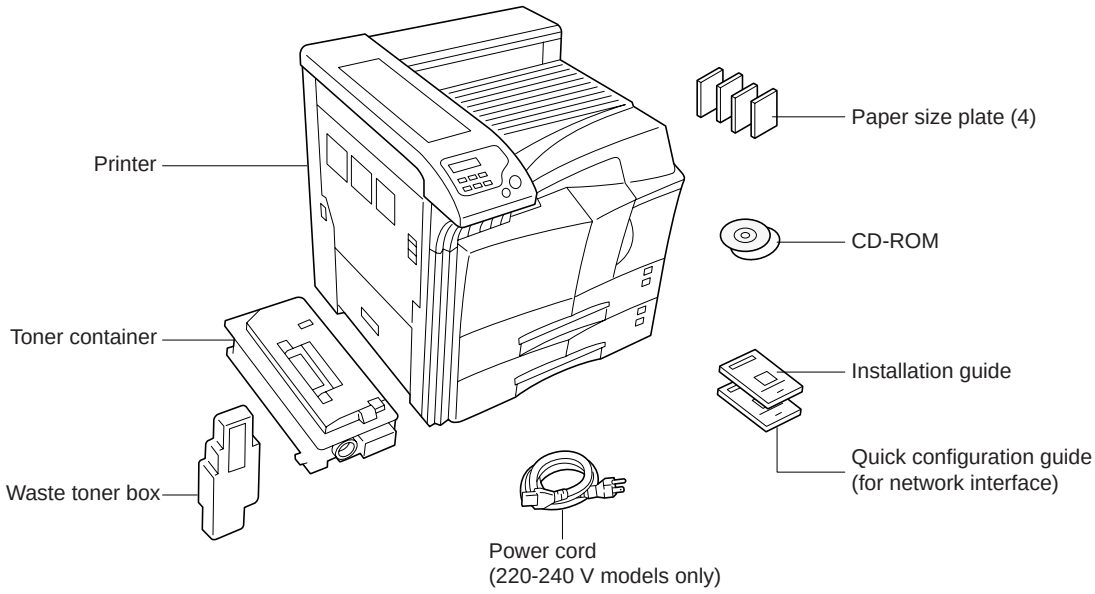

Figure 1-3-2 List of shipped components

Removing the tapes.

1. Remove the tape holding the front cover.
2. Remove the tape holding the MP tray.
3. Remove the two tapes holding the paper cassettes.

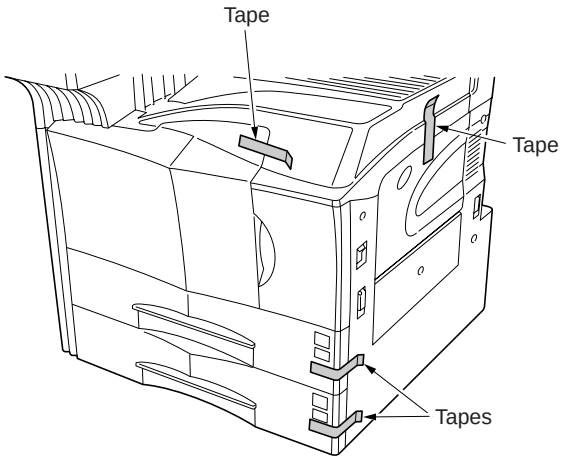

Figure 1-3-3

4. Remove the tapes holding the conveying cover.

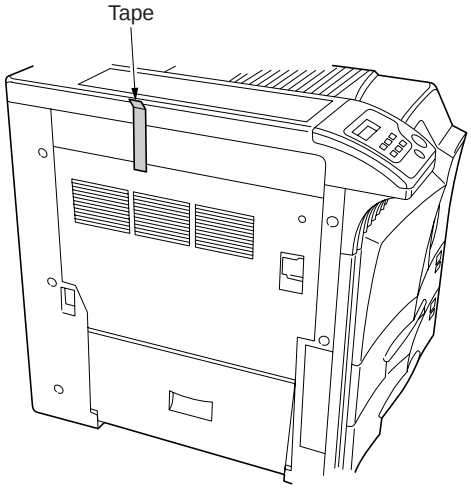

Figure 1-3-4

5. Pull out the upper paper cassette and remove the two tapes holding the bottom plate.
6. Pull out the lower paper cassette and remove the two tapes holding the bottom plate.

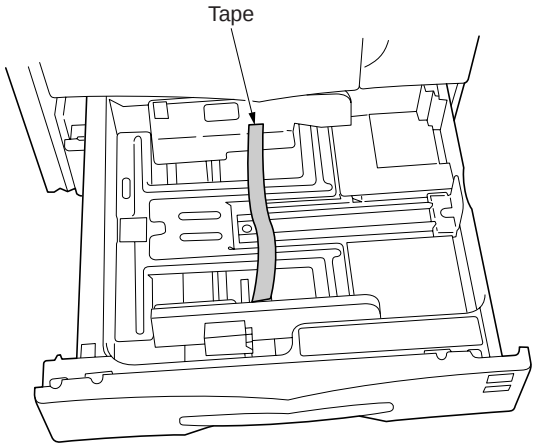

Figure 1-3-5

Placing the proper location.

1. Place the printer in a proper location.

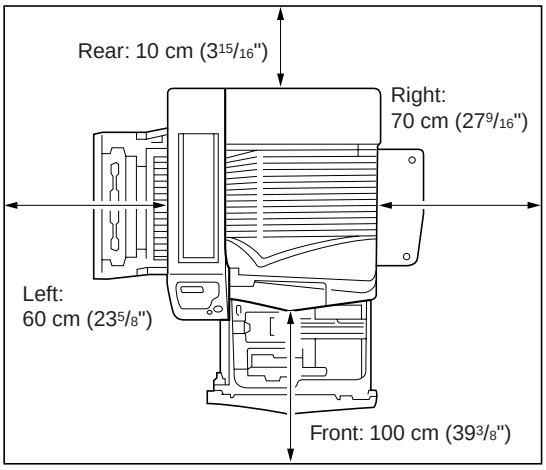

Figure 1-3-6

Installing the toner container.

1. Open the printer front cover all the way.

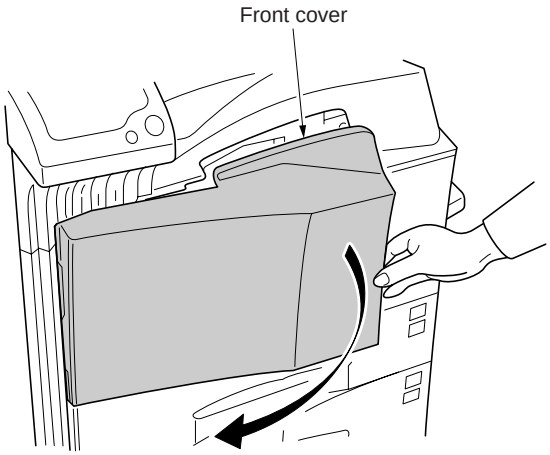

Figure 1-3-7

2. Take out the toner container from the bag.
3. Tap the new toner container on the top 5 to 6 times.

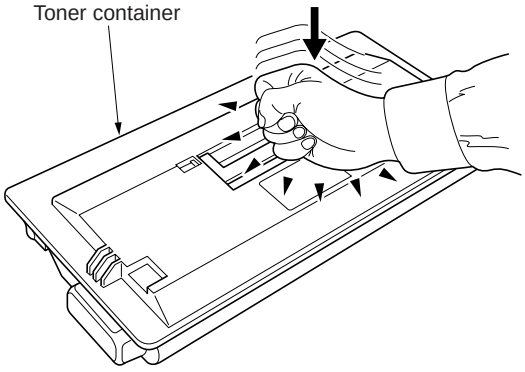

Figure 1-3-8

4. Thoroughly shake the toner container (in the directions of the arrows) ten times or more to loosen and mix the toner inside.

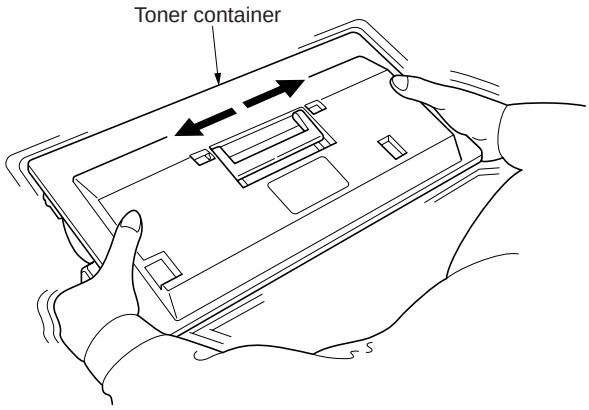

Figure 1-3-9

5. Grasp the handle on the toner container and insert the toner container along the rail of the printer.

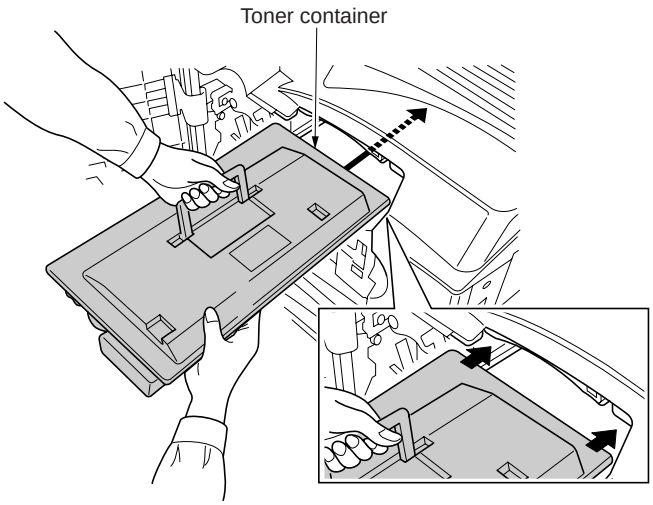

Figure 1-3-10

6. Hold the toner container by hands and fully insert it into the printer.

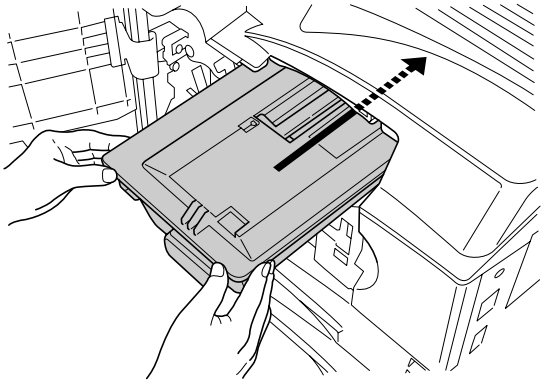

Figure 1-3-11

Installing the waste toner box.

1. Install the waste toner box as shown in the figure.
2. Close the front cover.

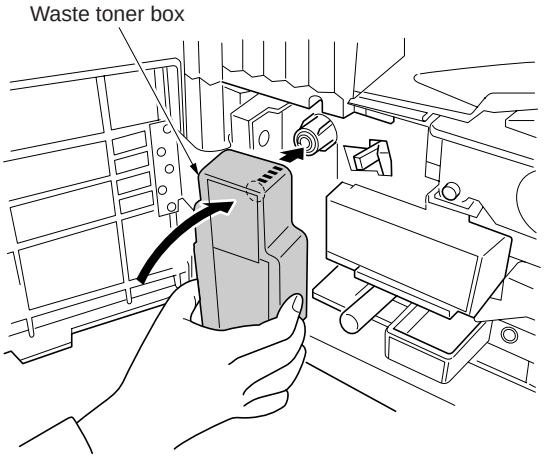

Figure 1-3-12

Connecting the printer to the computer.

There are various ways of connecting the printer to the computer, such as through the parallel interface connecter, serial interface connecter, or through the network interface connecter.

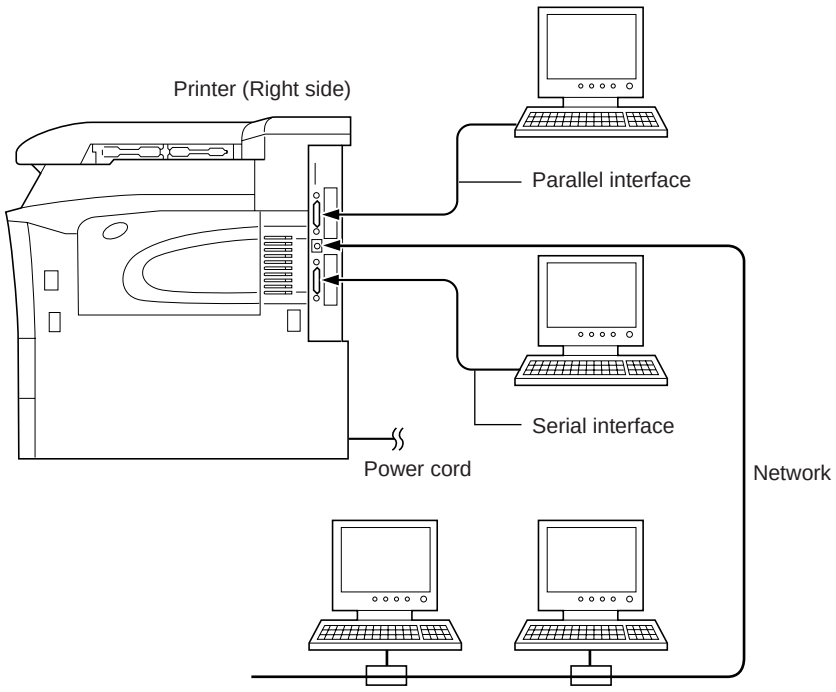

Figure 1-3-13

• Parallel interface connection

1. Plug one end of the printer cable (not included) into the parallel interface connection on the right side of the printer.
2. Close the clips on both sides to fix the connector in place.
   Plug the other end of the printer cable Into the computer‘s parallel Interface connection.

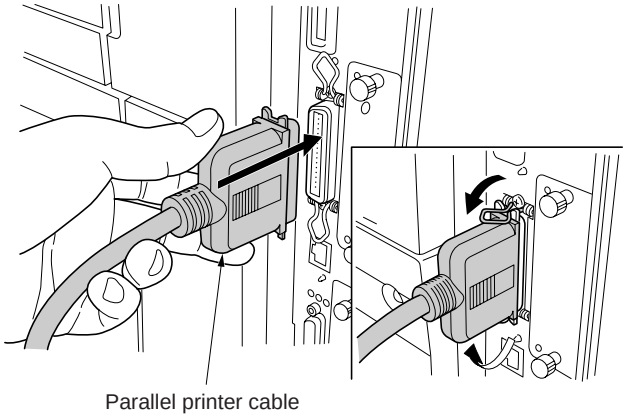

Figure 1-3-14

• Serial interface connection

1. Plug one end of the printer cable (not Included) Into the serial Interface connection on the right side of the printer.
2. Securely tighten the screws on both sides of the connecter.
   Plug the other end of the printer cable Into the computer‘s serial Interface connection.

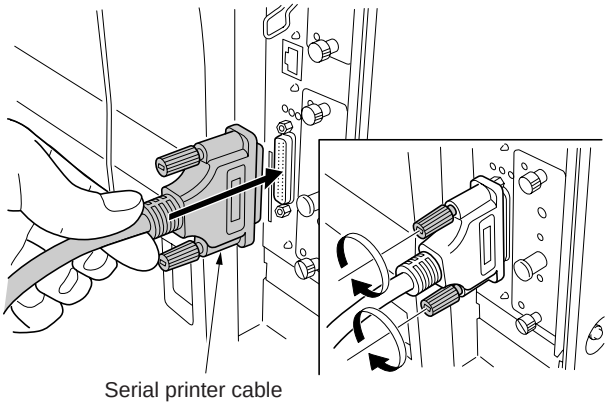

Figure 1-3-15

• Network interface connection

1. Plug the network cable (not included) into the network interface connection on the right side of printer.

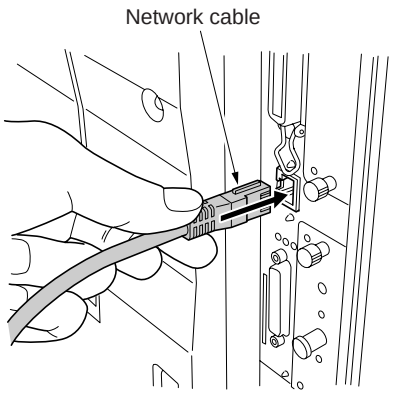

Figure 1-3-16

Connecting the power cord.

1. Plug the power cord into the power cord connector on the rear of the printer. (220 - 240 V models only)
2. Connect the other end of the power cord into a power outlet.

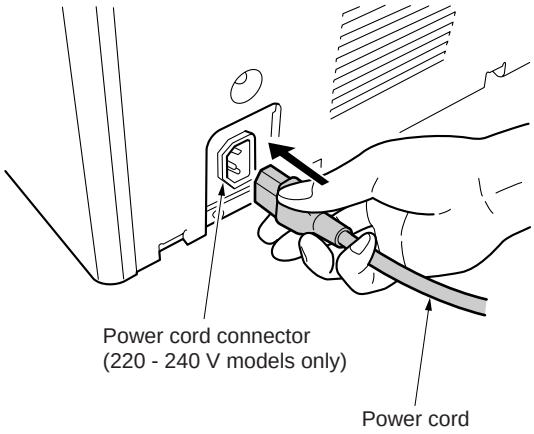

Figure 1-3-17

Printing a status page for test.

1. Add paper in the paper cassette.
2. Turn on the printer power switch.
   "Adding toner" will be displayed and the toner supply action will be taken for about 8 minutes.
3. Press the MENU key on the operation panel.
4. Press the △ or ▽ key repeatedly until [Print Status page] is displayed.
5. Press the ENTER key twice. A status page is printed.

Completion of the machine installation.

1-3-2 Installing the cassette heater (option)

Cassette heater installation requires the following parts:

- Cassette heater (P/N 34860030): for 120 V specifications
- Cassette heater (P/N 33960020): for 220 - 240 V specifications
- Binding band (P/N M2107120)
- Two binding screws BVM4X6 (P/N B1304060)
- Caution label (P/N 20305130)
- Fax kit label (P/N 3CM05010)

Procedure

1. Pull the upper and lower cassettes out.
2. Install the cassette heater to the bottom of the machine with two screws (M4X06), and bind the wire of the cassette heater with the band.
3. Put the wire of the cassette heater out of the machine through the aperture of the rear frame.
4. Stick the caution label in front of the cassette heater.

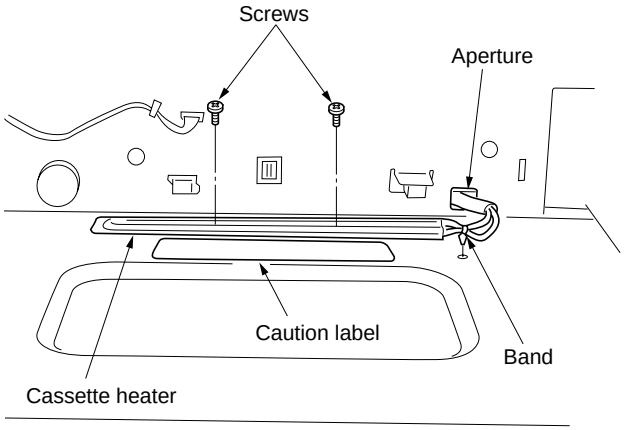

Figure 1-3-18

5. Remove the five screws and the two connectors and then remove the power supply mount from the rear side of the machine.
   Pay attention not to reverse the black wire and white wire when refitting the connector.

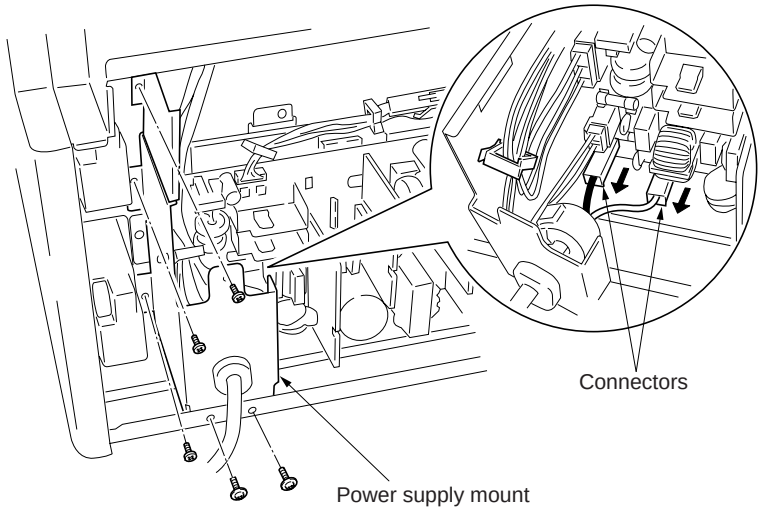

Figure 1-3-19

6. Remove the two screws and pull out the wire of the cassette heater that has been put out of the rear frame while raising the power supply unit.
7. Insert the connector of the cassette heater into the connector of the machine.
8. Fold the wire of the cassette heater and insert it into the clamp of the power supply mount as shown in the figure.

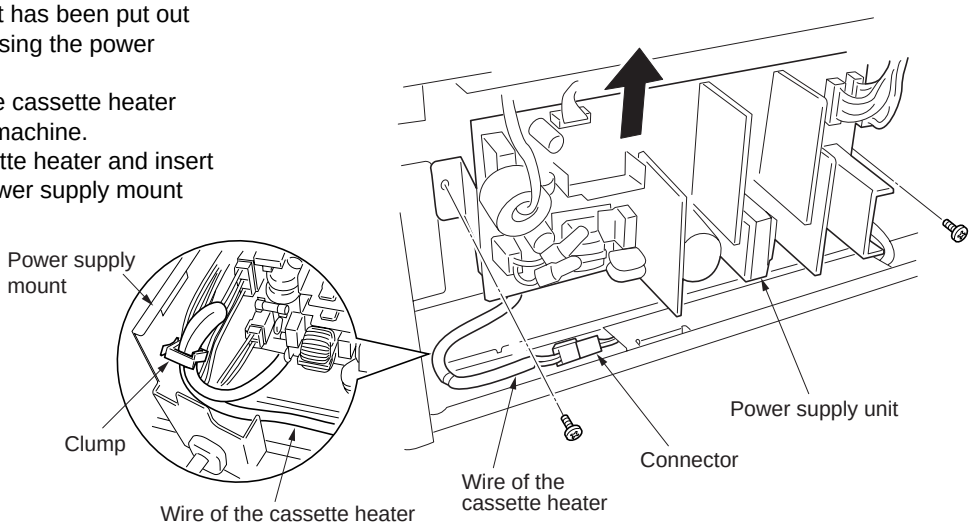

Figure 1-3-20

9. Stick the label below the power switch.
10. Refit all the removed parts.

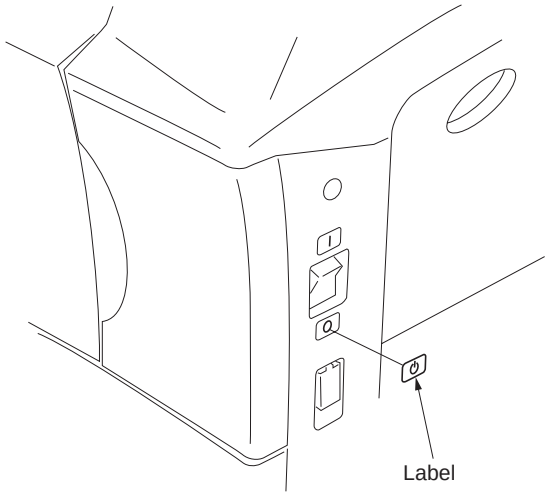

Figure 1-3-21

1-3-3 Installing DIMMs (option)

Procedure

• Installing DIMM

1. Remove two screws and then remove the main controller PWB (see page 1-6-24).
2. Open the clips on both ends of the DIMM socket.
3. Insert the DIMM into the socket, so that the notches on the DIMM align with the corresponding protrusions in the socket.

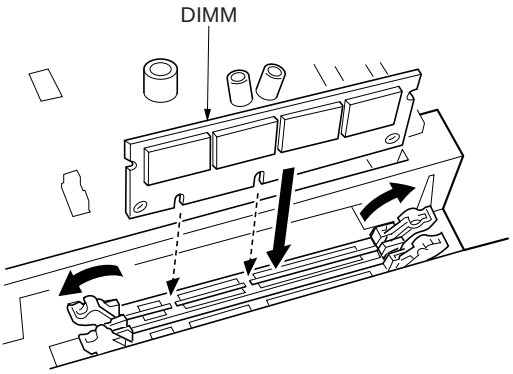

Figure 1-3-22

4. Close the clips of the DIMM socket to secure the DIMM.
5. When you finish installing the DIMM, reinsert the main controller PWB into the printer.

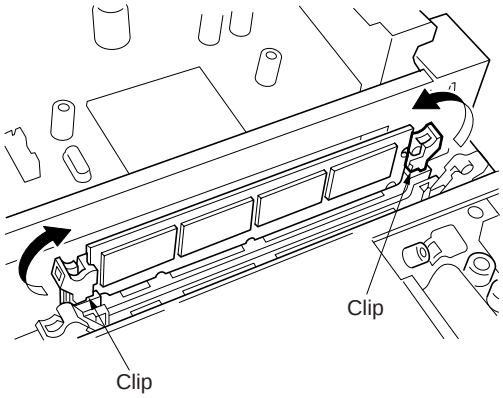

Figure 1-3-23

• Removing DIMM

1. To remove a DIMM, carefully pull the end clips outwards, then pull the DIMM out of the socket.

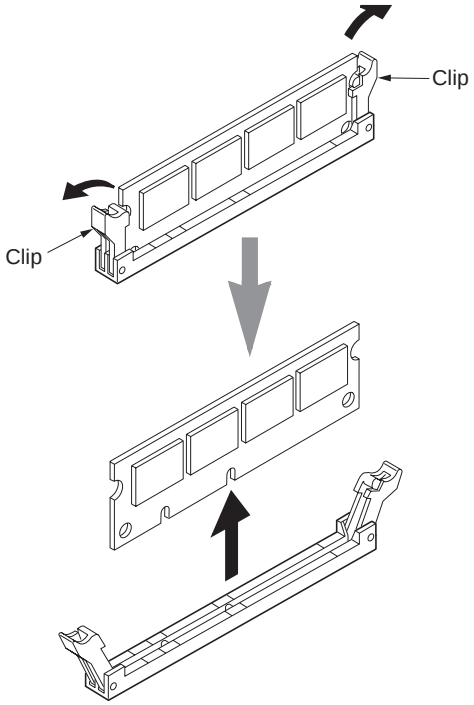

Figure 1-3-24

1-3-4 Installing the network interface card (option)

Procedure

1. Remove the two screws from the option interface slot cover.

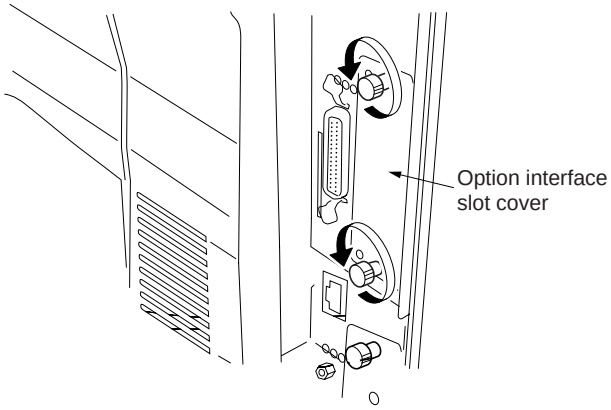

Figure 1-3-25

2. Insert the network interface card and secure it with the screws removed in step 1.

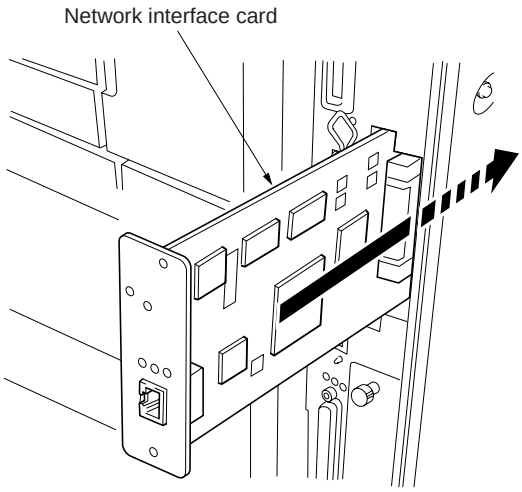

Figure 1-3-26

3. Connect the network cable.

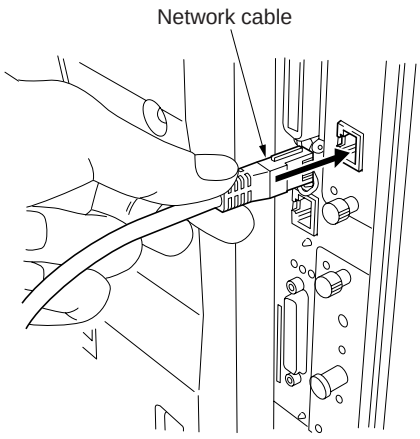

Figure 1-3-27

1-3-5 Installing the hard disk (option)

Procedure

1. Remove two screws and remove the slot cover.

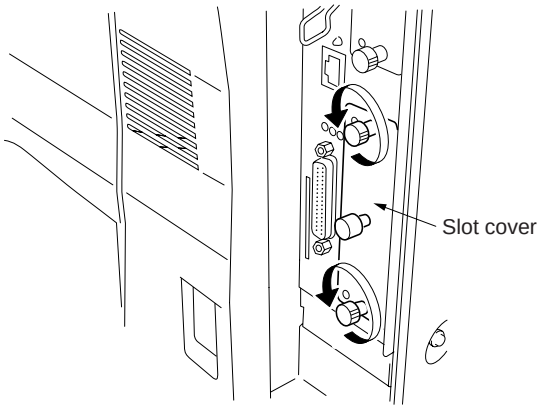

Figure 1-3-28

2. Insert the optional hard disk unit into the slot.

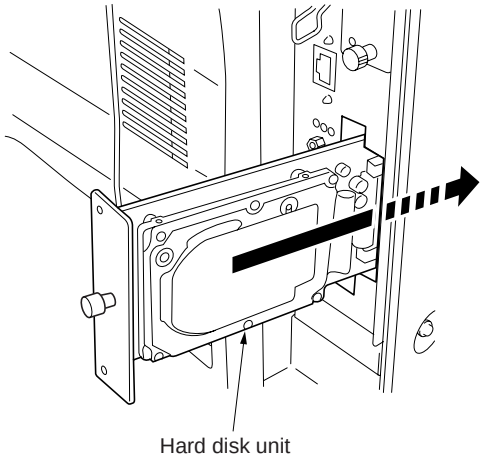

Figure 1-3-29

3. Tighten the two screws to secure the hard disk unit to the main controller PWB.

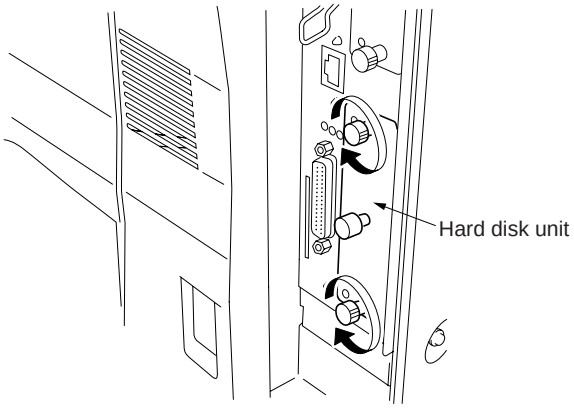

Figure 1-3-30

1-3-6 Installing the memory card (option)

Procedure

1. Turn off the printer.
   Note: Do not insert or remove a memory card (CompactFlash) while power in on. If the memory card is removed while the printer is on, damage could result in the printer's electronics or the memory card.
2. Insert the memory card in the slot. Insert it as its label surface facing toward outside, connector end first. Push it in all the way.

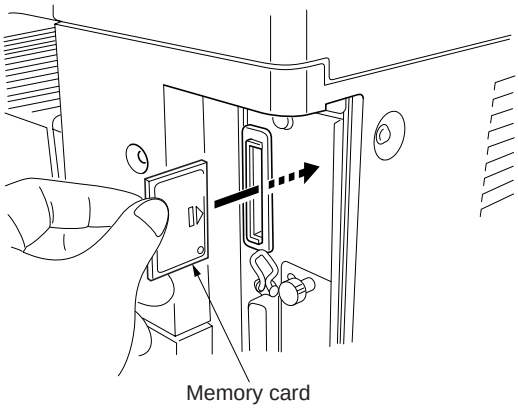

Figure 1-3-31

CONTENTS

1-4 Service and maintenance mode

1-4-1 Service mode 1-4-1
(1) Executing service mode 1-4-1
1-4-2 Maintenance mode 1-4-7
(1) Maintenance mode 1-4-7
(2) Executing a maintenance item 1-4-8
(3) Contents of maintenance mode items 1-4-10
1-4-3 Maintenance 1-4-27
(1) Replacing the toner container 1-4-27

1-4-1 Service mode

The printer is equipped with the service mode that can be accessed in the manu system. The service mode is intended for use by the service person for maintenance and service for the items explained in the following sections.

(1) Executing service mode

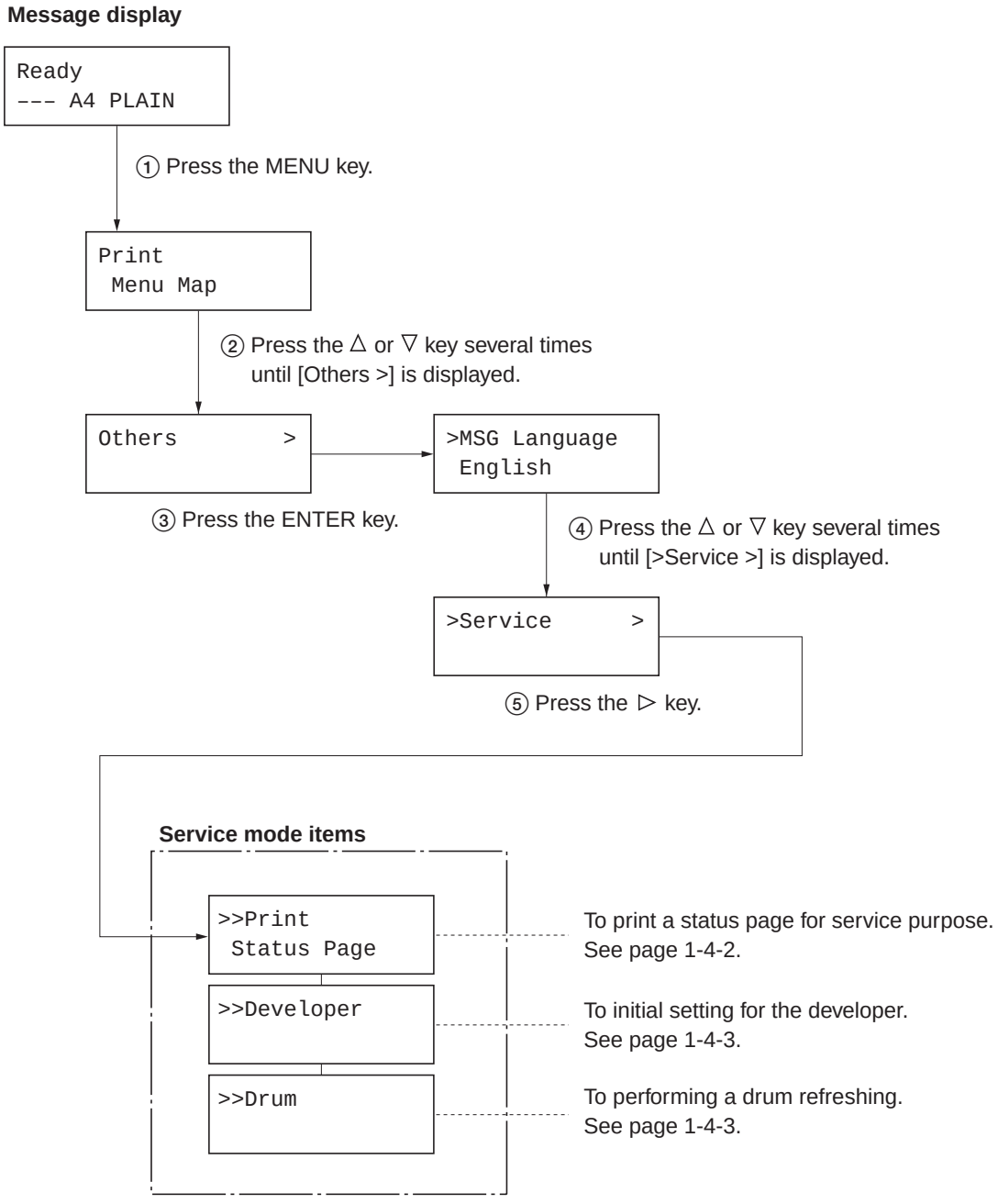

Service items	Description
>>Print Status Page	**Printing a status page for service purpose** **Description** Service information on the status page include various settings for the printer, service statistics, etc. **Purpose** To understand the machine environments and general settings. **Method** 1. Enter the service mode [>>Printing Status Page]. 2. Press the Enter key. "?" will be displayed. 3. Press the Enter key. The status page is printed. (See the figure below)

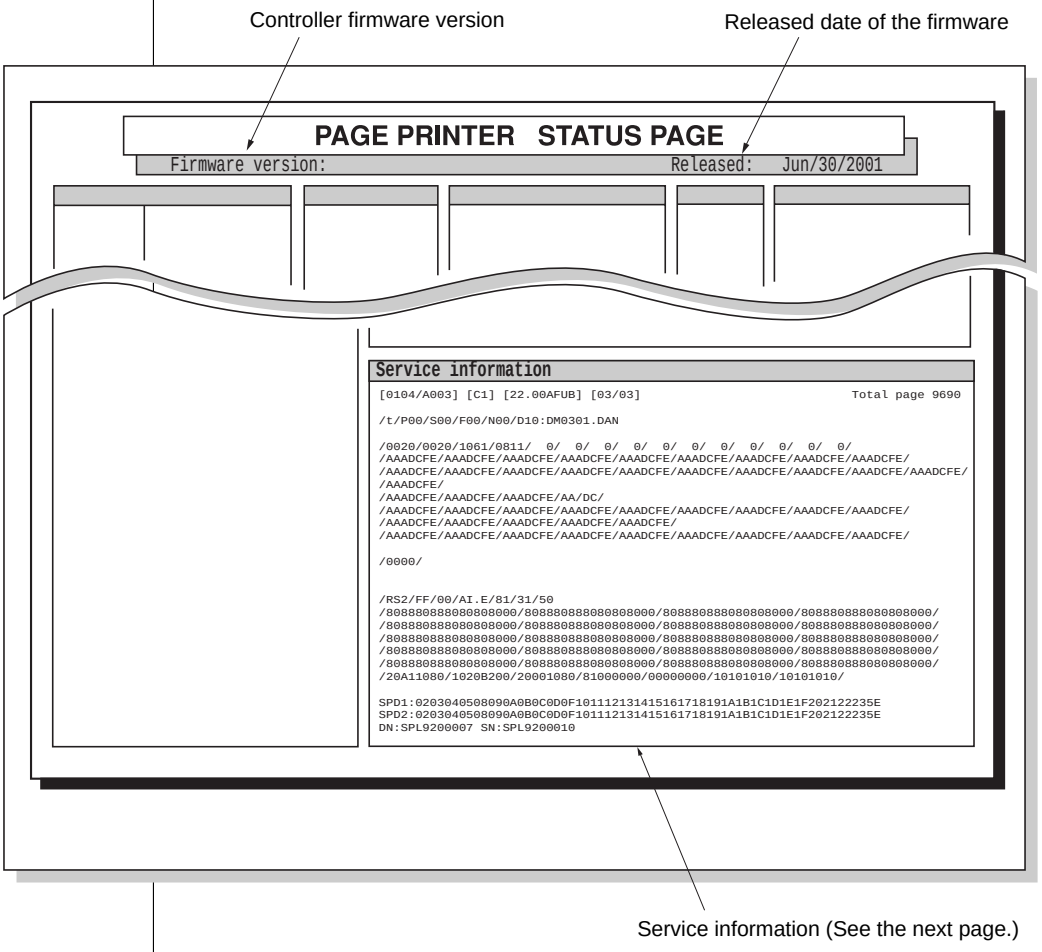

Figure 1-4-1

Service items	Description
	Detail of service information

Service information

```
[0104/A103] [C1] [22.00AFUB] [03/03]                                Total page 9690
     ①       ②       ③        ④                                          ⑤
/t/P00/S00/F00/N00/D10:DM0301.DAN
⑥  ⑦   ⑧   ⑨  ⑩          ⑪
/0020/0020/1061/0811/  0/  0/  0/  0/  0/  0/  0/  0/  0/  0/  0/
         ⑫                      ⑬                      ⑭
/AAADCFE/AAADCFE/AAADCFE/AAADCFE/AAADCFE/AAADCFE/AAADCFE/AAADCFE/AAADCFE/
                                        ⑮
/AAADCFE/AAADCFE/AAADCFE/AAADCFE/AAADCFE/AAADCFE/AAADCFE/AAADCFE/AAADCFE/AAADCFE/
                                            ⑯
/AAADCFE/
   ⑰
/AAADCFE/AAADCFE/AAADCFE/AA/DC/
           ⑱             ⑲  ⑳
/AAADCFE/AAADCFE/AAADCFE/AAADCFE/AAADCFE/AAADCFE/AAADCFE/AAADCFE/AAADCFE/
                                        ㉑
/AAADCFE/AAADCFE/AAADCFE/AAADCFE/AAADCFE/
                    ㉒
/AAADCFE/AAADCFE/AAADCFE/AAADCFE/AAADCFE/AAADCFE/AAADCFE/AAADCFE/AAADCFE/AAADCFE/
                                            ㉓


/0000/
  ㉔



/RS2/FF/00/AI.E/81/31/50
 ㉕  ㉖ ㉗  ㉘  ㉙ ㉚ ㉛

/8088808880808000/8088808880808000/8088808880808000/8088808880808000/
                                    ㉜ (1)
/8088808880808000/8088808880808000/8088808880808000/8088808880808000/
                                    ㉜ (2)
/8088808880808000/8088808880808000/8088808880808000/8088808880808000/
                                    ㉜ (3)
/8088808880808000/8088808880808000/8088808880808000/8088808880808000/
                                    ㉜ (4)
/8088808880808000/8088808880808000/8088808880808000/8088808880808000/
                                    ㉝
/20A11080/1020B200/20001080/81000000/00000000/10101010/10101010/
                                    ㉞

SPD1:0203040508090A0B0C0D0F101112131415161718191A1B1C1D1E1F202122235E
                                    ㉟
SPD2:0203040508090A0B0C0D0F101112131415161718191A1B1C1D1E1F202122235E
                                    ㊱
DN:SPL9200007 SN:SPL9200010
     ㊲           ㊳
```

Item	Description
① Engine controller PWB flash ROM information	[ROM version]
② Operator panel PWB mask ROM information	[ROM version]
③ Boot ROM and flash DIMM type information	First 6 digits: boot ROM version Last 3 digits: flash DIMM type MXI: Macronix / SHB: SHARP (LH28F160B) FUB: Fujitsu (bottom type) / FUT: Fujitsu (top type) HUB: HYUNDAI (bottom type) / HUT: (top type) - - -: Other type flash DIMM / ***: Mask DIMM

Service items	Description

Item	Description
④ Software jumper switch information (Hexadecimal)	First byte Bit 7: always 0 (MSB) Bit 6: 0 Non MICR mode Bit 5: 0: For Europe 1: For U.S. Bit 4: 0: Kyocera 1: OEM Bit 3: always 0 Bit 2: always 0 Bit 1: 0: Overseas 1: Domestic (Japan) Bit 0: always 0 (LSB) Second byte OEM information: Displayed in OEM mode only.
⑤ Total page counter	
⑥ Toner install information	
⑦ Parallel I/O information	
⑧ Serial I/O error code	00: Normal Bit 2: 1: Parity error Bit 1: 1: Overrun error Bit 0: 1: Framing error
⑨ Operation panel key lock status (Displayed only when locked)	01: Partial lock 02: Full lock
⑩ NVRAM error code (Displays only when error occurred)	01: ID error 02: Version error 03: Checksum error 04: NVRAM crush error
⑪ NVRAM downloading status	00: Normal downloaded Bit 7: Error occurred (MSB) Bit 6: Reserved Bit 5: OEM data Bit 4: Operator panel message data (File name displayed) Bit 3: Program data Bit 2: Macro data Bit 1: Host data Bit 0: Font data (LSB)
⑫ Printable area information	Top offset / Left offset / Page length / Page width
⑬ Left offset	MP tray / Cassette 1 / Cassette 2 / Cassette 3 / Cassette 4 / Duplex unit
⑭ Top offset	MP tray / Cassette 2 / Cassette 3 / Cassette 4 / Duplex unit
⑮ Life counter of paper feed position (Main body of printer)	Cassette 1 (total) / Cassette 1 (small) / Cassette 1 (large) Cassette 2 (total) / Cassette 2 (small) / Cassette 2 (large) MP tray (total) / MP tray (small) / MP tray (large) *"Small" means sizes A4/letter or smaller *Total = large x 2 + small
⑯ Life counter of paper feed position (Option paper feeder, duplex unit)	PF-70 cassette 1 (total) / PF-70 cassette 1 (small) / PF-70 cassette 1 (large) PF-70 cassette 2 (total) / PF-70 cassette 2 (small) / PF-70 cassette 2 (large) PF-75 (total) Duplex unit (total) / Duplex unit (small) / Duplex unit (large) *"Small" means sizes A4/letter or smaller *Total is calculated with the expression large x 2 + small.
⑰ Life counter of paper eject position	Face-down
⑱ Life counter of each unit	Drum / Developer / Fuser
⑲ Toner low FPR display threshold	
⑳ MP kit replacement threshold	

Service items	Description

Item	Description
㉑ Life counter of document finisher DF-70	Total pages / Tray 1 page / Tray 2 page Staple (total) / Staple (front) / Staple (rear) / Staple (upper left) / Staple (lower left) / Staple (two positions) *Total pages = Tray 1 page + Tray 2 page *Staple (total) = Staple (upper left) + Staple (lower left) + Staple (two positions) *Staple (front) = Staple (upper left) + Staple (two positions) *Staple (rear) = Staple (upper left) + Staple (two positions)
㉒ Life counter of book-let finisher DF-75 (1)	Total / Face-down tray / Book-let tray total / Book-let tray (small) / Book-let tray (large) *"Small" means sizes A4/letter or smaller *Total = face-down tray + book-let tray total
㉓ Life counter of book-let finisher DF-75 (2)	Total / front / rear / upper left / lower left / two positions (page end) / two positions (book-let) total / two positions (book-let) 2 - 3 sheets / two positions (book-let) 4 - 6 sheets / two positions (book-let) 7 - 10 sheets *Front = Upper left + two positions (page end) + two positions (book-let) total *Rear = Lower left + two positions (page end) + two positions (book-let) total *Total = Upper left + lower left + two positions (page end) + two positions (book-let) total
㉔ EEPROM error of each unit	Bit 7: EEPROM error of Drum (MSB) Bit 6: EEPROM error of large capacity stacker Bit 5 - 1: Reserved Bit 0: EEPROM error of first cassette of optional paper feeder PF-70 (LSB)
㉕ Serial interface information	RS2: RS-232C
㉖ Drum sensitivity information	
㉗ Calibration table setting	Preset value of FRPO 14 (Hexadecimal)
㉘ Average print density (%)	2 digits of integer part and 1 digit of fraction part (total print density from shipping from factory)
㉙ Operation panel message language	
㉚ Current temperature	0 to 80 °C ("–" = Humidity/temperature sensor is abnormal.)
㉛ Current humidity	5 to 100 %RH (in 1% increment)
㉜ Various correction values for maintenance mode	
㉝ Engine parameter setting	
㉞ Media type attributes	Media type 1 to 28 (14 to 20: Reserved)
㉟ SPD information (slot 1)	
㊱ SPD information (slot 2)	
㊲ Drum serial number	
㊳ Printer serial number	

Service items	Description
>>Developer	**Initializing the developer unit** **Description** Feeds toner from the toner container to the developer unit. **Purpose** To execute when the developer unit has been replaced. **Method** 1. Enter the service mode [>>Developer]. 2. Press the Enter key. "?" will be displayed. 3. Press the Enter key. 4. Turn off and on the printer. Toner is fed from the toner container to the developer unit.
>>Drum	**Drum surface refreshing** **Description** The drum rotates for approximately 5 minutes without printing operation. **Purpose** To clean the drum surface when an image problem occurs. **Method** 1. Enter the service mode [>>Drum]. 2. Press the Enter key. "?" will be displayed. 3. Press the Enter key. Drum surface refreshing will start.

1-4-2 Maintenance mode

(1) Maintenance mode

The printer is equipped with a maintenance function which can be used to maintain and service the machine.
To run the maintenance mode, Insert a compact flash card to which the API program has been written into the printer and load the API program to the printer using either method.

* Turn off and on the printer. The API program will be automatically loaded into the printer.
* Load the API program with read program.
* Enter the MENU mode and display the [>>Read Program Maintenance API] in the [Memory Card>], then press the ENTER key.

The maintenance mode can be executed from the MENU mode.
If the compact flash card is removed from the printer and then the printer is turned off and on, the API program will be deleted from the printer and the maintenance mode will be deleted from the MENU mode.

(2) Executing a maintenance item

Message display

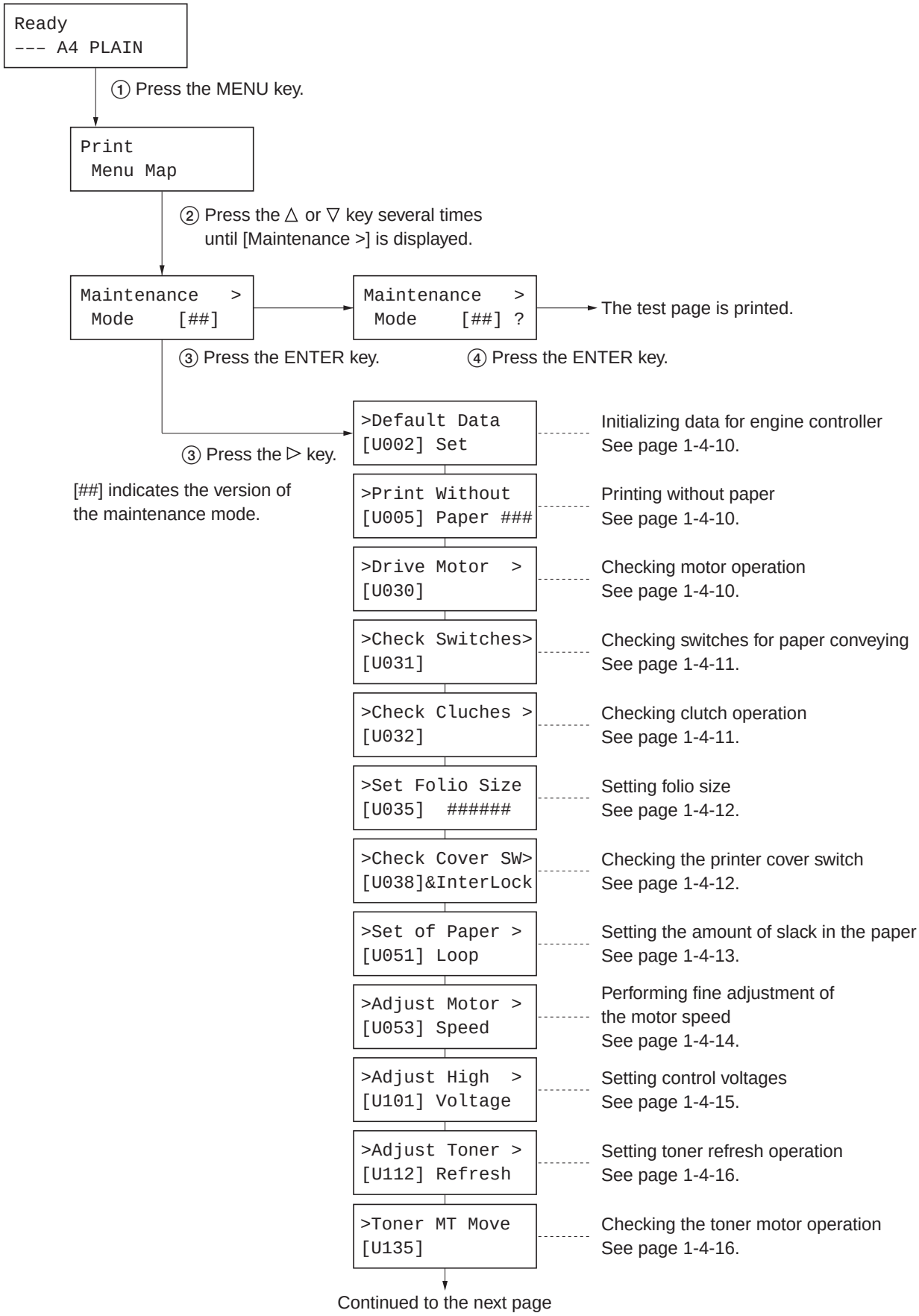

Continued to the next page

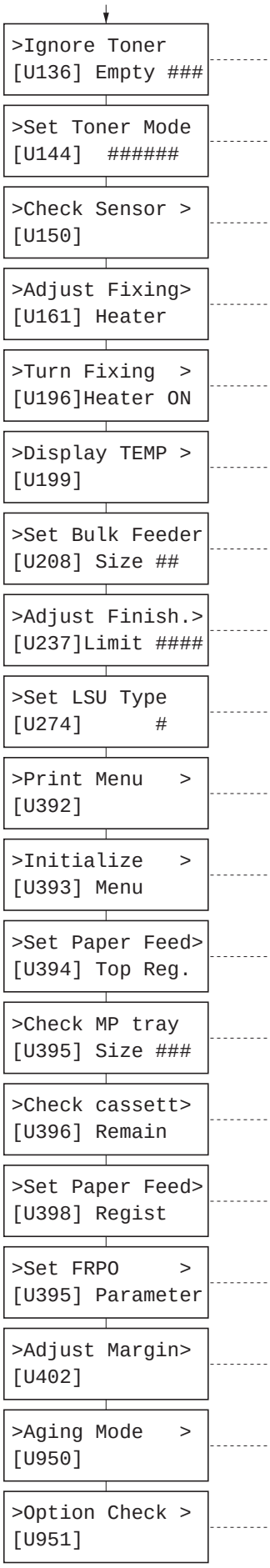
>Ignore Toner
[U136] Empty ###
Switching empty toner status detection
See page 1-4-16.
>Set Toner Mode
[U144] ######
Setting toner loading operation
See page 1-4-17.
>Check Sensor >
[U150]
Checking sensors
See page 1-4-17.
>Adjust Fixing>
[U161] Heater
Setting the fixing control temperature
See page 1-4-18.
>Turn Fixing >
[U196]Heater ON
Turning the fixing heater on
See page 1-4-19.
>Display TEMP >
[U199]
Checking the fixing temperature
See page 1-4-19.
>Set Bulk Feeder
[U208] Size ##
Setting the paper size for the paper feeder PF-75
See page 1-4-20.
>Adjust Finish.>
[U237]Limit ####
Setting finisher stack quantity
See page 1-4-20.
>Set LSU Type
[U274] #
Setting LSU type
See page 1-4-21.
>Print Menu >
[U392]
Outputs of the history of events of the service calls and paper jam
See page 1-4-21.
>Initialize >
[U393] Menu
Initializing data for FRPO
See page 1-4-22.
>Set Paper Feed>
[U394] Top Reg.
Adjusting leading edge margin for each paper cassette
See page 1-4-22.
>Check MP tray
[U395] Size ###
Checking size in MP tray
See page 1-4-23.
>Check cassett>
[U396] Remain
Displaying the amount of paper remaining in each paper cassette
See page 1-4-23.
>Set Paper Feed>
[U398] Regist
Adjusting left margin for each paper cassette
See page 1-4-24.
>Set FRPO >
[U395] Parameter
Checking size in MP tray
See page 1-4-24.
>Adjust Margin>
[U402]
Adjusting margins of image printing
See page 1-4-25.
>Aging Mode >
[U950]
Executing aging mode
See page 1-4-25.
>Option Check >
[U951]
Checking connection status of each optional equipment
See page 1-4-26.

(3) Contents of maintenance mode items

<table>
<tr><th>Maintenance item No.</th><th>Description</th></tr>
<tr><td>U002</td><td>
Initializing data for engine controller
Description
Initializing the backup RAM for engine controller to return to the original settings.
Purpose
Used to return the machine settings to initial settings.
Method
1. Enter the maintenance mode and press the △ or ▽ key to display "U002".
2. Press the ENTER key. "?" will be displayed.
<pre>>Default Data
[U002] Set?</pre>
3. Press the ENTER key. Each setting will be initialized.
To keep the setting, press the CANCEL key.
</td></tr>
<tr><td>U005</td><td>
Printing without paper
Description
Switches to the machine operation control without paper
Purpose
To check the overall operation of the machine.
Method
1. Enter the maintenance mode and press the △ or ▽ key to display "U005".
2. Press the ENTER key. "?" will be displayed.
3. Press the △ or ▽ key to turn on or off printing without paper.
<pre>>Print Without
[U005] Paper?Off</pre>
4. Press the ENTER key. The setting is set.
To keep the setting, press the CANCEL key.
</td></tr>
<tr><td>U030</td><td>
Checking motor operation
Description
Drives each motor.
Purpose
To check the operation of each motor.
Method
1. Enter the maintenance mode and press the △ or ▽ key to display "U030".
<pre>>Drive Motors >
[U030]</pre>
2. Press the ▷ key to display the submenu screen.
3. Press the △ or ▽ key to select the motor to activate.
<table>
<tr><th>Display</th><th>Operation</th></tr>
<tr><td>FEED Motor</td><td>Paper feed motor operates</td></tr>
<tr><td>MAIN Motor</td><td>Drive motor operates</td></tr>
<tr><td>EJECT MT (FW)</td><td>Eject motor rotates forward</td></tr>
<tr><td>EJECT MT (REV)</td><td>Eject motor rotates in reverse</td></tr>
</table>
4. Press the ENTER key. "Execute" will be displayed and operation will start.
<pre>>>FEED Motor
[030.1] Execute</pre>
5. To stop operation, press the ENTER key or the CANCEL key.
</td></tr>
</table>

<table>
<tr><th>Maintenance item No.</th><th>Description</th></tr>
<tr><td>U031</td><td>
Checking switches for paper conveying
Description
Displays the on-off status of each paper detection switch on the paper path.
Purpose
To check if the switches for paper conveying operate correctly.
Method
1. Enter the maintenance mode and press the △ or ▽ key to display "U031".
<pre>>Check Switches>
[U031]</pre>
2. Press the ▷ key to display the submenu screen.
3. Press the △ or ▽ key to select the switch to check.
<table>
<tr><th>Display</th><th>Switches</th></tr>
<tr><td>Check SW F1</td><td>Feed switch 1 (FSW1)</td></tr>
<tr><td>Check SW F2</td><td>Feed switch 2 (FSW2)</td></tr>
<tr><td>Check SW F3</td><td>Feed switch 3 (FSW3)</td></tr>
<tr><td>Check SW MP</td><td>MP feed switch (MPFSW)</td></tr>
<tr><td>Check SW RES</td><td>Registration switch (RSW)</td></tr>
<tr><td>Check SW EJE</td><td>Eject switch (ESW)</td></tr>
<tr><td>Check SW BRA</td><td>Feedshift switch (FSSW)</td></tr>
<tr><td>Check SW DUP</td><td>Duplex paper conveying switch (DUPPCSW)</td></tr>
</table>
4. Turn on or off the switch manually to check the switch status. 0: Off 1: On
<pre>>>Check SW F1:0
[031.1] SW F2:0</pre>
</td></tr>
<tr><td>U032</td><td>
Checking clutch operation
Description
Turns each clutch on.
Purpose
To check the operation of each clutch.
Method
1. Enter the maintenance mode and press the △ or ▽ key to display "U032".
<pre>>Check Clutches>
[U032]</pre>
2. Press the ▷ key to display the submenu screen.
3. Press the △ or ▽ key to select the clutch to operate.
<table>
<tr><th>Display</th><th>Clutches</th></tr>
<tr><td>PF1 Clutch</td><td>Upper paper feed clutch (PFCL-U)</td></tr>
<tr><td>PF2 Clutch</td><td>Lower paper feed clutch (PFCL-U)</td></tr>
<tr><td>PFMP Clutch</td><td>MP paper feed clutch (MPPFCL)</td></tr>
<tr><td>FEED1 Clutch</td><td>Feed clutch 1 (FCL1)</td></tr>
<tr><td>FEED2 Clutch</td><td>Feed clutch 2 (FCL2)</td></tr>
<tr><td>FEED3 Clutch</td><td>Feed clutch 3 (FCL3)</td></tr>
<tr><td>MPTF Clutch</td><td>MP feed clutch (MPFCL)</td></tr>
<tr><td>RES Clutch</td><td>Registration clutch (RCL)</td></tr>
<tr><td>DUPF Clutch</td><td>Duplex feed clutch (DUPFCL)</td></tr>
</table>
4. Press the ENTER key. "Execute" will be displayed and operation will start.
<pre>>>PF1 Clutch
[032.1] Execute</pre>
5. To stop operation, press the ENTER key or the CANCEL key.
</td></tr>
</table>

<table>
<tr><th>Maintenance item No.</th><th>Description</th></tr>
<tr><td>U035</td><td>
Setting folio size
Description
Sets the type of paper when using Folio or Oficioll.
Purpose
To prevent image loss that occurs depending on the difference of paper type.
Method
1. Enter the maintenance mode and press the △ or ▽ key to display "U035".
2. Press the ENTER key. "?" will be displayed.
3. Press the △ or ▽ key to select folio or oficioll.
<pre>>Set Folio Size
[U035]?Folio</pre>
4. Press the ENTER key. The setting is set.
To keep the setting, press the CANCEL key.
</td></tr>
<tr><td>U038</td><td>
Checking the printer cover switch
Description
Displays the on-off status of each cover switch.
Purpose
To check if the switches of covers operate correctly.
Method
1. Enter the maintenance mode and press the △ or ▽ key to display "U038".
<pre>>Check Cover SW>
[U038]&InterLock</pre>
2. Press the ▷ key to display the submenu screen.
3. Press the △ or ▽ key to select the switch to check.
<table>
<tr><th>Display</th><th>Switches</th></tr>
<tr><td>Left cover 1
Left cover 2
Front cover
Int. Lck</td><td>Conveying cover switch (CCSW)
Side cover switch (SCSW)
Front cover switch (FRCSW)
Safety switch 1 and 2 (SSW1 and 2)</td></tr>
</table>
3. Open and close the cover to check the switch status. 0: Off 1: On
<pre>>>Left Cover 1:1
[038.1]   2:1</pre>
</td></tr>
</table>

Maintenance item No.	Description

U051	**Setting the amount of slack in the paper**
	Description
	Changes the preset value of the amount of slack of resist or feed.
	Purpose
	To adjust when the leading edge of the image is not printed or fluctuates irregularly or paper is bent in Z shape.
	Method
	1. Enter the maintenance mode and press the △ or ▽ key to display "U051".
	`>Set of Paper >`
	`[U051] Loop`
	2. Press the ▷ key to display the submenu screen.
	3. Press the △ or ▽ key to select the item for which the preset value is to be changed.

Display	Description	Setting range	Initial setting
RES FEEDER	Amount of slack of resist in feeding from the paper cassette in the printer	-30 to +20	0
RES MPT	Amount of slack of resist in feeding from the MP tray	-30 to +20	0
RES DUP	Amount of slack of resist in feeding for duplex printing	-30 to +20	-3
FEED MPT	Amount of slack of feed in feeding from the MP tray	-30 to +20	0
FEED CASS1	Amount of slack of feed in feeding from the upper cassette in the printer	-30 to +20	0
FEED CASS2	Amount of slack of feed in feeding from the lower cassette in the printer	-30 to +20	0
FEED CASS3	Amount of slack of feed in feeding from the upper cassette in PF-70	-30 to +20	0
FEED CASS4	Amount of slack of feed in feeding from the lower cassette in PF-70	-30 to +20	0
FEED 3000F	Amount of slack of feed in feeding from PF-75	-30 to +20	0

4. Press the ENTER key. "_" will blink.

```
>>RES FEEDER
[051.1]   ##
```

5. Press the ◁ or ▷ key to move "_" to the digit position at which the value is to be changed and press the △ or ▽ key to change the preset value.
6. Press the ENTER key. The value is set.
   To keep the preset value, press the CANCEL key.

Maintenance item No.	Description

U053	**Performing fine adjustment of the motor speed**
	Description
	Performs fine adjustment of the speeds of the motors.
	Purpose
	Used to adjust the speed of the respective motors when the magnification is not correct.
	Method
	1. Enter the maintenance mode and press the △ or ▽ key to display "U053".
	`>Adjust Motor >`
	`[U053] Speed`
	2. Press the ▷ key to display the submenu screen.
	3. Press the △ or ▽ key to select an item for which the preset value is to be changed.

Display	Description	Setting range	Initial setting
Main Motor	Drive motor speed adjustment	0 to +14	10
Eject Motor	Eject motor speed adjustment	-20 to +20	7
Polygon Motor	Polygon motor speed adjustment	-20 to +20	2

4. Press the ENTER key. "_" will blink.

```
>>Main Motor
[053.1]   ##
```

5. Press the ◁ or ▷ key to move "_" to the digit position at which the value is to be changed and press the △ or ▽ key to change the preset value.
   MAIN MOTOR
   Increasing the setting makes the image longer in the auxiliary scanning direction, and decreasing it makes the image shorter in the auxiliary scanning direction.
   POLYGON MOTOR
   Increasing the setting makes the image longer in the main scanning direction and shorter in the auxiliary scanning direction; decreasing the setting makes the image shorter in the main scanning direction and longer in the auxiliary scanning direction.
   EJECT MOTOR
   Normally no change is necessary but this can be used as countermeasures against wrinkles (waving) of paper.
6. Press the ENTER key. The value is set.
   To keep the preset value, press the CANCEL key.

Maintenance item No.	Description

U101	**Setting control voltages**
	Description
	Changes the developing bias voltage and transfer voltage by changing the developing bias control voltage and transfer control voltage.
	Purpose
	To check or change the developing bias and transfer voltage.
	Method
	1. Enter the maintenance mode and press the △ or ▽ key to display "U101".
	`>Adjust High >`
	`[U101] Voltage`
	2. Press the ▷ key to display the submenu screen.
	3. Press the △ or ▽ key to select an item for which the preset value is to be changed.

Display	Description	Setting range	Initial setting
DEV BIAS	Developing bias AC component frequency at image formation	-255 to 255 (KHz)	0
DEV DUTY	Developing bias AC component duty at image formation	-100 to +100 (%)	0
DEV SBIAS	Developing bias shift amount	-1 to +1	0
TC DATA	Transfer control voltage	0 to 255 (uA)	0

Increasing the DEV BIAS setting makes the image darker; decreasing it makes the image lighter.
Increasing the DEV DUTY setting makes the image lighter; decreasing it makes the image darker.
Increasing the DEV SBIAS setting makes the image darker; decreasing it makes the image lighter.
Increasing the TC DATA setting makes the transfer voltage higher, and decreasing it makes the voltage lower.

4. Press the ENTER key. "_" will blink.

`>>DEV BIAS`
`[101.1] ###_ KHz`

5. Press the ◁ or ▷ key to move "_" to the digit position at which the value is to be changed and press the △ or ▽ key to change the preset value.
6. Press the ENTER key. The value is set.
   To keep the preset value, press the CANCEL key.

<table>
<tr><th>Maintenance item No.</th><th>Description</th></tr>
<tr><td>U112</td><td>
Setting toner refresh operation
Description
Sets the toner refresh operation time and the developing bias on time at power on and after printing.
Purpose
To change the toner refresh operation time and the developing bias on time at power on and after printing if image flow level is low.
Method
1. Enter the maintenance mode and press the △ or ▽ key to display "U112".
<pre>>Adjust Toner >
[U112] Refresh</pre>
2. Press the ▷ key to display the submenu screen.
3. Press the △ or ▽ key to select an item for which the preset value is to be changed.
<table>
<tr><th>Display</th><th>Description</th><th>Setting range</th><th>Initial setting</th></tr>
<tr><td>ON TIME
BIAS TIME</td><td>toner refresh operation time
Developing bias on time</td><td>50 to 150 (sec)
500 to 1000 (msec)</td><td>120
700</td></tr>
</table>
4. Press the ENTER key. "_" will blink.
<pre>>>ON TIME
[112.1] ###_ sec.</pre>
5. Press the ◁ or ▷ key to move "_" to the digit position at which the value is to be changed and press the △ or ▽ key to change the preset value.
6. Press the ENTER key. The value is set.
To keep the preset value, press the CANCEL key.
</td></tr>
<tr><td>U135</td><td>
Checking the toner motor operation
Description
Turns the toner motor on.
Purpose
To turn on the toner motor and check toner agitation operation.
Method
1. Enter the maintenance mode and press the △ or ▽ key to display "U135".
2. Press the ENTER key. "Execute" will be displayed and operation will start.
<pre>>Toner MT Move
[U135] Execute</pre>
3. To stop operation, press the ENTER key or the CANCEL key.
</td></tr>
<tr><td>U136</td><td>
Switching empty toner status detection
Description
Sets whether empty toner status detection is performed when the amount of toner remaining in the toner container is small.
Purpose
If this item is set to OFF, when the amount of toner remaining in the toner container is small, printing can be continued using the toner in the developer unit.
Method
1. Enter the maintenance mode and press the △ or ▽ key to display "U136".
2. Press the ENTER key. "?" will be displayed.
3. Press the △ or ▽ key to turn on or off empty toner status detection.
<pre>>Ignore Toner
[U136] Empty?Off</pre>
4. Press the ENTER key. The setting is set.
To keep the preset value, press the CANCEL key.
</td></tr>
</table>

<table>
<tr><th>Maintenance item No.</th><th>Description</th></tr>
<tr><td>U144</td><td>
Setting toner loading operation
Description
Sets toner loading operation after completion of printing.
Purpose
To set whether or not toner is loaded on the drum after low density printing. Normally no change is necessary from the initial setting.
Method
1. Enter the maintenance mode and press the △ or ▽ key to display "U144".
2. Press the ENTER key. "?" will be displayed.
<pre>>Set Toner Mode
[U144] ? Mode2</pre>
3. Press the △ or ▽ key to select the desired mode.
<table>
<tr><th>Display</th><th>Description</th></tr>
<tr><td>MODE0
MODE1
MODE2</td><td>Toner not loaded
Toner not loaded
Toner loaded</td></tr>
</table>
Initial setting: MODE2
4. Press the ENTER key. The setting is set.
To keep the setting, press the CANCEL key.
</td></tr>
<tr><td>U150</td><td>
Checking sensors
Description
Displays the status of each sensor.
Purpose
To check if the sensors operate correctly.
Method
1. Enter the maintenance mode and press the △ or ▽ key to display "U150".
<pre>>Check Sensor >
[U150]</pre>
2. Press the ▷ key to display the submenu screen.
The status of each sensor will be displayed.
<table>
<tr><th>Display</th><th>Switches</th></tr>
<tr><td>Ton
WatTon
F-down</td><td>Toner container sensor (TCS)
Overflow sensor (OFS)
Paper full sensor (PFS)</td></tr>
</table>
3. Turn on or off the switch to check the status of the sensor. 0: Off 1: On
<pre>>>Ton:0 WstTon:0
[150.1] F-down:0</pre>
</td></tr>
</table>

Maintenance item No.	Description

U161	**Setting the fixing control temperature**
	Description
	Changes the fixing control temperature.
	Purpose
	Normally no change is necessary. However, can be used to prevent curling or creasing of paper, or solve a fixing problem on thick paper.
	Method
	1. Enter the maintenance mode and press the △ or ▽ key to display "U161".
	`>Adjust Fixing>`
	`[U161] Heater`
	2. Press the ▷ key to display the submenu screen.
	3. Press the △ or ▽ key to select the item for which the preset value is to be changed.

Display	Description	Setting range	Initial setting
CONTROL TEMP	Control temperature during printing	100 to 200 (°C)	165/175*
1ST TEMP	Primary stabilization fixing temperature	100 to 200 (°C)	120/130*
2ND TEMP	Secondary stabilization fixing temperature	100 to 200 (°C)	165/175*
Print TEMP(L)	Fixing control temperature for large size printing	-30 to +30 (°C)	5
Print TEMP(M)	Fixing control temperature for middle size printing	-30 to +30 (°C)	0/15*
Print TEMP(S)	Fixing control temperature for small size printing	-30 to +30 (°C)	0
L/L UP	Fixing temperature increase amount at low temperature and low humidity	0 to +20 (°C)	5
H/H DOWN TEMP	Fixing temperature decrease amount at high temperature and high humidity	0 to +20 (°C)	0
DUP DOWN TEMP	Fixing temperature decrease amount for duplex printing	0 to +20 (°C)	10

*: FS-9100DN/9500DN

The respective temperatures are to be set such that 2ND TEMP ≧ 1ST TEMP.

4. Press the ENTER key. "_" will blink.

`>>CONTROL TEMP`
`[161.1]  ###`

5. Press the ◁ or ▷ key to move "_" to the digit position at which the value is to be changed and press the △ or ▽ key to change the preset value.
6. Press the ENTER key. The value is set.
   To keep the preset value, press the CANCEL key.

<table>
<tr><th>Maintenance item No.</th><th>Description</th></tr>
<tr><td>U196</td><td>
Turning the fixing heater on
Description
Turns the fixing heater M or S on.
Purpose
To check fixing heaters turning on.
Method
1. Enter the maintenance mode and press the △ or ▽ key to display "U196".
<pre>>Turn Fixing >
[U196] Heater ON</pre>
2. Press the ▷ key to display the submenu screen.
3. Press the △ or ▽ key to select the heater to turn on.
<table>
<tr><th>Display</th><th>Description</th></tr>
<tr><td>Main Heater ON
Sub Heater ON</td><td>Fixing heater M (FH-M)
Fixing heater S (FH-S)</td></tr>
</table>
4. Press the ENTER key. "Execute" will be displayed and the heater will be turned on for three seconds.
Note
Do not open or close the cover when the heater is on. Either do not turn on the heater continuously.
<pre>>>Main Heater ON
[196.1] Execute</pre>
5. To turn off the heater, press the ENTER key or the CANCEL key.
</td></tr>
<tr><td>U199</td><td>
Checking the fixing temperature
Description
Displays the fixing temperature, the ambient temperature and the absolute humidity.
Purpose
To check the fixing temperature, the ambient temperature and the absolute humidity.
Method
1. Enter the maintenance mode and press the △ or ▽ key to display "U199".
<pre>>Display TEMP >
[U199]</pre>
2. Press the ▷ key to display the submenu screen.
<pre>>>FIX TEMP
[199.1]   ###</pre>
3. Press the △ or ▽ key to select the item to check.
<table>
<tr><th>Display</th><th>Description</th></tr>
<tr><td>FIX TEMP
SURROUND TEMP
HUMIDITY</td><td>Fixing temperature (°C)
Ambient temperature (°C)
Absolute humidity (%)</td></tr>
</table>
</td></tr>
</table>

<table>
<tr><th>Maintenance item No.</th><th>Description</th></tr>
<tr><td>U208</td><td>
Setting the paper size for the paper feeder PF-75
Description
Sets the size of paper used in the optional paper feeder PF-75. Note that the setting cannot be changed on inch-specification machines since the paper size for the paper feeder PF-75 is fixed.
Purpose
To change the setting when the size of paper used in the paper feeder PF-75 is changed.
Method
1. Enter the maintenance mode and press the △ or ▽ key to display "U208".
2. Press the ENTER key. "?" will be displayed.
<pre>>Set Bulk Feeder
[U208] Size? A4</pre>
3. To keep the setting, press the CANCEL key.
<table>
<tr><th>Display</th><th>Description</th></tr>
<tr><td>A4
B5
LT</td><td>A4 size
B5 size
Letter size</td></tr>
</table>
4. Press the ENTER key. The setting is set.
To keep the setting, press the CANCEL key.
</td></tr>
<tr><td>U237</td><td>
Setting finisher stack quantity
Description
Sets the number of sheets of stack on the intermediate tray in the optional finisher.
Purpose
To change the setting when a stack malfunction has occurred.
Method
1. Enter the maintenance mode and press the △ or ▽ key to display "U237".
<pre>>Adjust Finish.>
[U237] Limit</pre>
2. Press the ▷ key to display the submenu screen.
3. Press the △ or ▽ key to select the item for which the preset value is to be changed.
<table>
<tr><th>Display</th><th>Description</th><th>Preset value</th></tr>
<tr><td>Main Tray
Middle Tray</td><td>Number of sheets of stack on the main tray
Number of sheets of stack on the intermediate tray for sort printing or staple printing</td><td>3000 or 1500 sheets
50 or 30 sheets</td></tr>
</table>
4. Press the ENTER key. "?" will be displayed.
<pre>>>Main Tray
[237.1] ? 3000</pre>
5. Press the △ or ▽ key to change the preset value.
6. Press the ENTER key. The value is set.
To keep the preset value, press the CANCEL key.
</td></tr>
</table>

<table>
<tr><th>Maintenance item No.</th><th>Description</th></tr>
<tr><td>U274</td><td>
Setting LSU type
Description
Sets the LSU type in accordance with the number of the label stuck on the LSU. Sets the output power of LSU according to the types of machine.
Purpose
To set when the LSU is replaced.
Method
1. Enter the maintenance mode and press the △ or ▽ key to display "U274".
<pre>>Set LSU Type
[274.1]   #</pre>
2. Press the △ or ▽ key to select an item for which the preset value is to be changed.
<table>
<tr><th>Display</th><th>Description</th><th>Setting range</th><th>Initial setting</th></tr>
<tr><td>LSU Type
LSU Power</td><td>LSU type
LSU output power</td><td>0 to 3
High/Low (FS-9500DN/9100DN)</td><td>1
–</td></tr>
</table>
3. Press the ENTER key.
4. Press the △ or ▽ key to change the preset value.
5. Press the ENTER key. The value is set.
To keep the preset value, press the CANCEL key.
</td></tr>
<tr><td>U392</td><td>
Outputs of the history of events of the service calls and paper jam
Description
Outputs the history of events conditions of the service calls and paper jam.
Purpose
To check the event conditions of the service calls and paper jam.
Method
1. Enter the maintenance mode and press the △ or ▽ key to display "U392".
<pre>>Print Menu   >
[U392]</pre>
2. Press the ▷ key to display the submenu screen.
3. Press the ENTER key. "?" will be displayed.
<pre>>>Print Event
[392.1] Log?</pre>
4. Press the ENTER key. History output starts.
If it will not start, press the CANCEL key.
</td></tr>
</table>

<table>
<tr><th>Maintenance item No.</th><th>Description</th></tr>
<tr><td>U393</td><td>
Initializing data for FRPO
Description
Initializes each preset value of FRPO.
Purpose
To reset each preset value of FRPO to the initial values.
Method
1. Enter the maintenance mode and press the △ or ▽ key to display "U393".
<pre>>Initialize   >
[U393] Menu</pre>
2. Press the ▷ key to display the submenu screen.
3. Press the ENTER key. "?" will be displayed.
<pre>>>FRPO INIT
[393.1] ?</pre>
4. Press the ENTER key. Each setting will be initialized.
To keep the setting, press the CANCEL key.
</td></tr>
<tr><td>U394</td><td>
Adjusting the leading edge margin of image printing for each paper cassette
Description
Adjusts the leading edge margin of image printing for each paper cassette.
Purpose
To adjust the leading edge margin if it is displaced depending on the paper cassette. Before adjusting this item, use U402 to adjust the leading edge margin for the upper cassette of the printer.
Method
1. Enter the maintenance mode and press the △ or ▽ key to display "U394".
<pre>>Set Paper Feed>
[U394] Top Reg.</pre>
2. Press the ▷ key to display the submenu screen.
3. Press the △ or ▽ key to select the item for which the preset value is to be changed.
<table>
<tr><th>Display</th><th>Description</th><th>Setting range</th><th>Initial setting</th></tr>
<tr><td>Cassette 2</td><td>Leading edge margin for lower cassette of the printer</td><td>-128 to +127</td><td>0</td></tr>
<tr><td>Cassette 3</td><td>Leading edge margin for upper cassette of PF-70</td><td>-128 to +127</td><td>0</td></tr>
<tr><td>Cassette 4</td><td>Leading edge margin for lower cassette of PF-70</td><td>-128 to +127</td><td>0</td></tr>
<tr><td>MP</td><td>Leading edge margin for MP tray</td><td>-128 to +127</td><td>+5</td></tr>
<tr><td>Duplex</td><td>Leading edge margin for duplex printing</td><td>-128 to +127</td><td>-20</td></tr>
</table>
4. Press the ENTER key. "_" will blink.
<pre>>>Cassette 2
[394.1]   ###</pre>
5. Press the ◁ or ▷ key to move "_" to the digit position at which the value is to be changed and press the △ or ▽ key to change the preset value.
If the preset value is increased, the margin will be larger. If the preset value is decreased, the margin will be smaller.
6. Press the ENTER key. The value is set.
To keep the preset value, press the CANCEL key.
</td></tr>
</table>

<table>
<tr><th>Maintenance item No.</th><th>Description</th></tr>
<tr><td>U395</td><td>
Checking the size in MP tray
Description
Displays the size of paper set in the MP tray.
Purpose
To check to see if the size switch of the MP tray operates correctly.
Method
1. Enter the maintenance mode and press the △ or ▽ key to display "U395".
The size of paper set in the MP tray will be displayed.
<pre>>Check MP Tray
[U395] Size ###</pre>
<table>
<tr><th>Paper size</th><th>Display</th><th>Paper size</th><th>Display</th></tr>
<tr><td>A3/Ledger</td><td>010</td><td>B4</td><td>011</td></tr>
<tr><td>A4R/Letter-R</td><td>008</td><td>B5R</td><td>009</td></tr>
<tr><td>A4/Letter</td><td>108</td><td>B5</td><td>109</td></tr>
<tr><td>A5</td><td>013</td><td>B6</td><td>015</td></tr>
<tr><td>A6</td><td>014</td><td>Folio/Legal</td><td>51</td></tr>
</table>
</td></tr>
<tr><td>U396</td><td>
Displaying the amount of paper remaining in each paper cassette
Description
Displays the amount of paper remaining in each paper cassette.
Purpose
To check the amount of paper remaining in each paper cassette.
Method
1. Enter the maintenance mode and press the △ or ▽ key to display "U396".
<pre>>Check Cassette>
[U396] Remain</pre>
2. Press the ▷ key to display the submenu screen.
3. Press the △ or ▽ key to select the item to check.
<table>
<tr><th>Display</th><th>Description</th></tr>
<tr><td>Cassette 1</td><td>Amount of paper remaining in the upper cassette of the printer (%)</td></tr>
<tr><td>Cassette 2</td><td>Amount of paper remaining in the lower cassette of the printer (%)</td></tr>
<tr><td>Cassette 3</td><td>Amount of paper remaining in the upper cassette of PF-70 (%)</td></tr>
<tr><td>Cassette 4</td><td>Amount of paper remaining in the lower cassette of PF-70 (%)</td></tr>
</table>
<pre>>>Cassette 1
[396.1]   ###%</pre>
Display range: 0 - 100% (0: no paper / 100: full)
</td></tr>
</table>

<table>
<tr><th>Maintenance item No.</th><th>Description</th></tr>
<tr><td>U398</td><td>
Adjusting left margin of image printing for each paper cassette
Description
Adjusts the left margin of image printing for each paper cassette.
Purpose
To adjust the left margin if it is displaced depending on the paper cassette. Before adjusting this item, use U402 to adjust the left margin of the upper cassette of the printer.
Method
1. Enter the maintenance mode and press the △ or ▽ key to display "U398".
<pre>>Set Paper Feed>
[U398] Regist</pre>
2. Press the ▷ key to display the submenu screen.
3. Press the △ or ▽ key to select the item for which the preset value is to be changed.
<table>
<tr><th>Display</th><th>Description</th><th>Setting range</th><th>Initial setting</th></tr>
<tr><td>Cassette 2
Cassette 3
Cassette 4
Duplex</td><td>Left margin for lower cassette of the printer
Left margin for upper cassette of PF-70
Left margin for lower cassette of PF-70
Left margin for duplex printing</td><td>-600 to +600
-600 to +600
-600 to +600
-600 to +600</td><td>0
0
0
0</td></tr>
</table>
4. Press the ENTER key. "_" will blink.
<pre>>>Cassette 2
[398.1]   ###</pre>
5. Press the ◁ or ▷ key to move "_" to the digit position at which the value is to be changed and press the △ or ▽ key to change the preset value.
If the preset value is increased, the margin will be larger. If the preset value is decreased, the margin will be smaller.
6. Press the ENTER key. The value is set.
To keep the preset value, press the CANCEL key.
</td></tr>
<tr><td>U399</td><td>
Setting FRPO
Description
Set the firmware again.
Purpose
To change the preset values of firmware.
Method
1. Enter the maintenance mode and press the △ or ▽ key to display "U399".
<pre>>Set FRPO   >
[U399] Parameter</pre>
2. Press the▷ key to display the submenu screen.
3. Press the △ or ▽ key to select the item for which the preset value is to be changed.
4. Press the ENTER key. "_" will blink.
<pre>>>FRPO H0
[399.1]   ##</pre>
5. Press the ◁ or ▷ key to move "_" to the digit position at which the value is to be changed and press the △ or ▽ key to change the preset value.
6. Press the ENTER key. The value is set.
To keep the preset value, press the CANCEL key.
</td></tr>
</table>

<table>
<tr><th>Maintenance item No.</th><th>Description</th></tr>
<tr><td>U402</td><td>
Adjusting margins of image printing
Description
Adjusts the margins of image printing for feeding from the upper cassette of the printer.
Purpose
Used if margins are not correct.
Method
1. Enter the maintenance mode and press the △ or key to display "U402".
<pre>>Adujust Margin>
[U402]</pre>
2. Press the ▷ key to display the submenu screen.
3. Press the △ or ▽ key to select the item for which the preset value is to be changed.
<table>
<tr><th>Display</th><th>Description</th><th>Setting range</th><th>Initial setting</th></tr>
<tr><td>Top Margin
Left Margin</td><td>Leading edge margin
Left margin</td><td>00.00 to 99.99 (inch)
00.00 to 99.99 (inch)</td><td>51
78</td></tr>
</table>
4. Press the ENTER key. "_" will blink.
<pre>>>Top Margin
[402.1] ##.##</pre>
5. Press the ◁ or ▷ key to move "_" to the digit position at which the value is to be changed and press the △ or ▽ key to change the preset value.
If the preset value is increased, the margin will be larger. If the preset value is decreased, the margin will be smaller.
6. Press the ENTER key. The value is set.
To keep the preset value, press the CANCEL key.
</td></tr>
<tr><td>U950</td><td>
Executing aging mode
Description
Executes the aging mode to revolve the polygon motor and the fan.
Purpose
To check the aging operation.
Method
1. Enter the maintenance mode and press the △ or ▽ key to display "U950".
<pre>>Aging Mode   >
[U950]</pre>
2. Press the ▷ key to display the submenu screen.
3. Press the ENTER key. "Execute" will be displayed and operation will start.
<pre>>>Aging
[950.1] Execute</pre>
4. To stop operation, press the ENTER key or the CANCEL key.
</td></tr>
</table>

Maintenance item No.	Description

U951	**Checking connection status of each optional equipment**
	Description
	Displays the connection status of each optional equipment.
	Purpose
	To check the connection status of each optional equipment.
	Method
	1. Enter the maintenance mode and press the △ or ▽ key to display "U951".
	`>Option Check >`
	`[U951]`
	2. Press the ▷ key to display the submenu screen.
	`>>Initial Test`
	`[951.1] ###.###`
	3. Press the △ or ▽ key to select the item to check.

Display	Description	Connection status
Initial Test	Initialization sequence check for optional equipment	0: Inspecting / 1: NG / 2: OK
Finisher	Connection status of finisher DF-70	0: Not installed / 1: Installed
Option Feeder	Connection status of paper feeder PF-70/75	0: Not installed / 1: PF-70 is installed / 2: PF-75 is installed
Rev. Adapter	Connection status of reverse adapter	0: Not installed/ 1: Installed
Booklet Fin.	Connection status of booklet finisher	0: Not installed/ 1: Installed

1-4-3 Maintenance

(1) Replacing the toner container

Assuming an average toner coverage of 5% and Ecoprint mode turned off, the toner container will need replacing approximately once every 40,000 pages.*
* For a new printer with a toner kit installed for the first time, the number of copies that can be printed will be approximately 20,000.

Procedure

1. Open the printer front cover all the way.

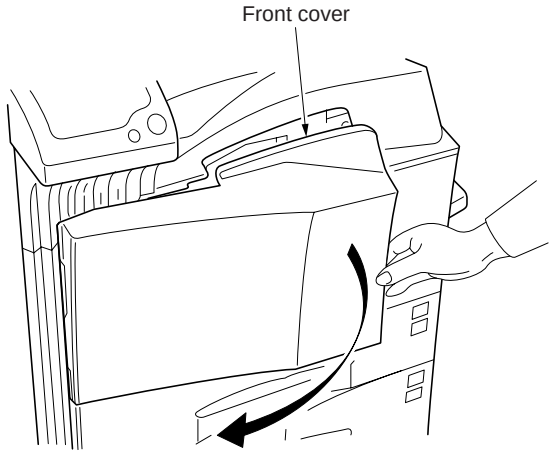

Figure 1-4-2

2. Push the lock lever (blue colored) up and gently remove the toner container until its handle appears.
   * Do not pull the toner container all the way as it can fall off and the toner spots the floor.

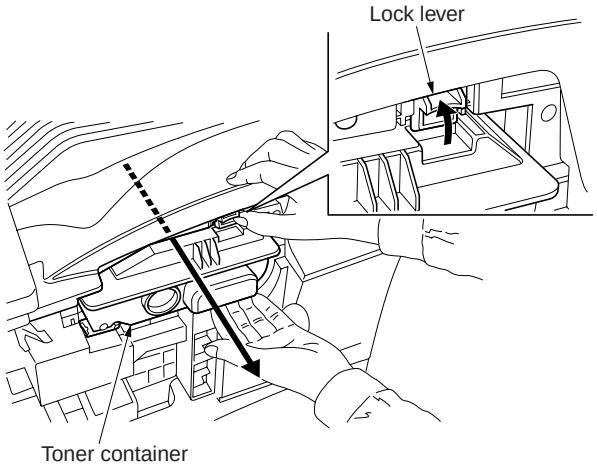

Figure 1-4-3

3. Grasp the handle on the toner container, push the lock lever up again and gently lift the toner container.

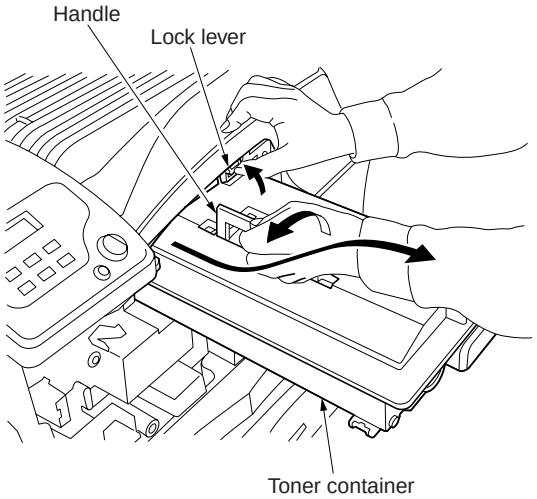

Figure 1-4-4

4. Seal up the old toner container with the supplied plastic bag and dispose it.

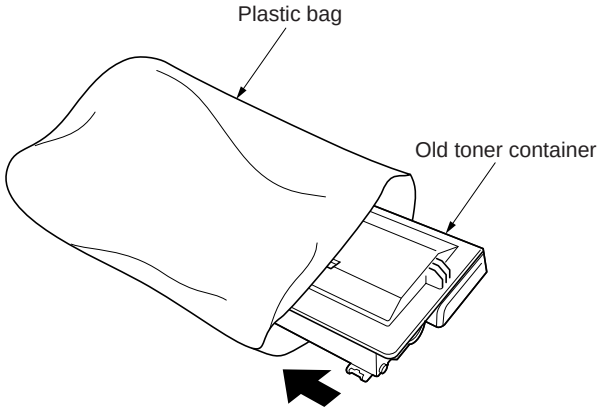

Figure 1-4-5

5. Take out the new toner container from the bag, and then lightly tap it on the top 5 to 6 times.

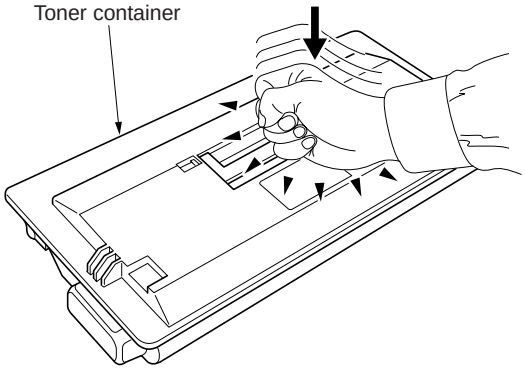

Figure 1-4-6

6. Thoroughly shake the toner container (in the direction of the arrow) ten times or more to loosen and mix the toner inside.

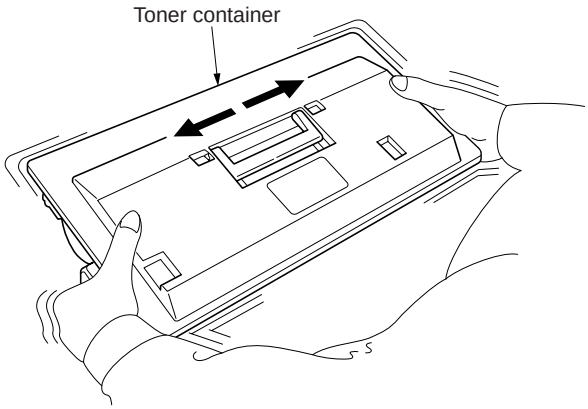

Figure 1-4-7

7. Grasp the handle on the toner container and insert the toner container along the rail of the printer.

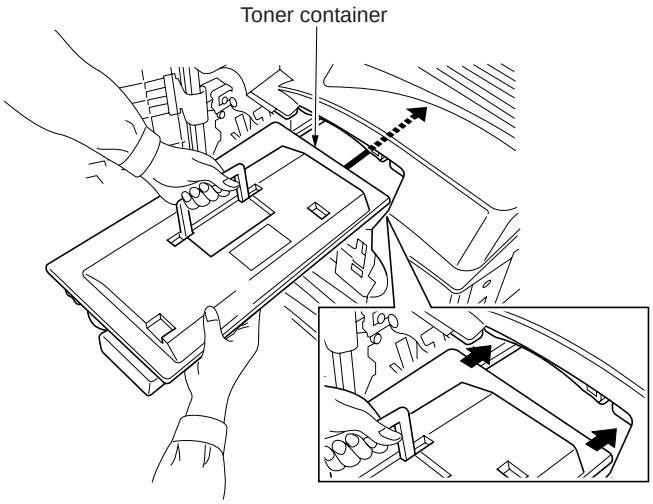

Figure 1-4-8

8. Hold the toner container by hands and fully insert it into the printer.

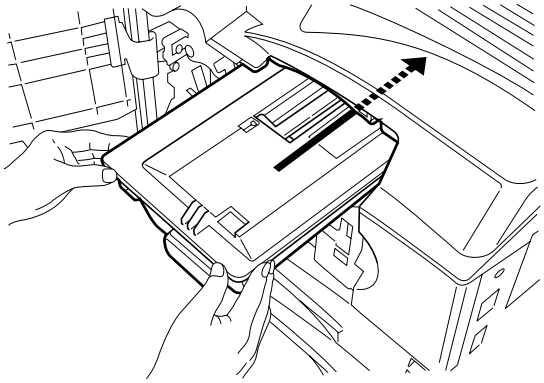

Figure 1-4-9

9. Remove the old waste toner box as shown in the figure.

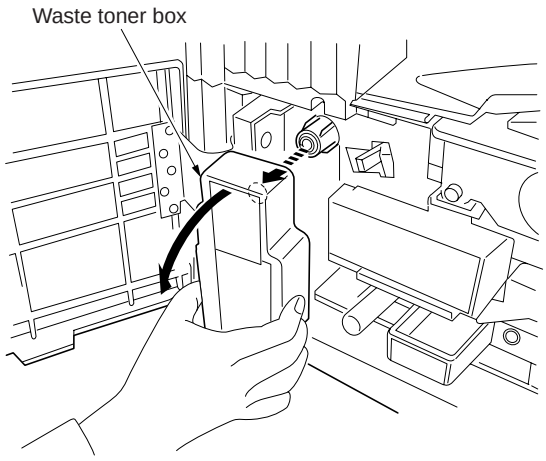

Figure 1-4-10

10. Remove the seal from the rear of the old waste toner box, and then close the opening of the box with the seal. Seal up the old waste toner box with the supplied plastic bag and dispose it.

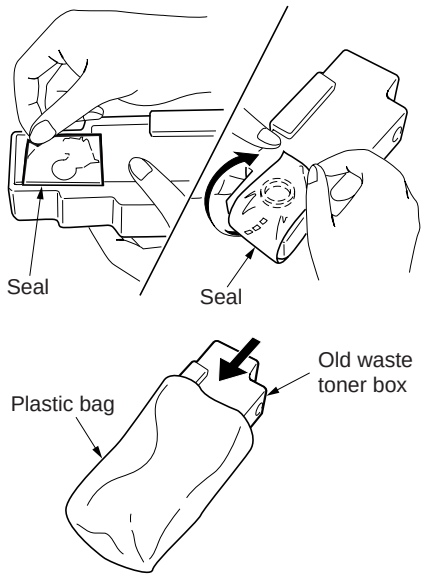

Figure 1-4-11

11. Gently pull the cleaning knob as far as it will go, push and pull it several times, and then push it back in.

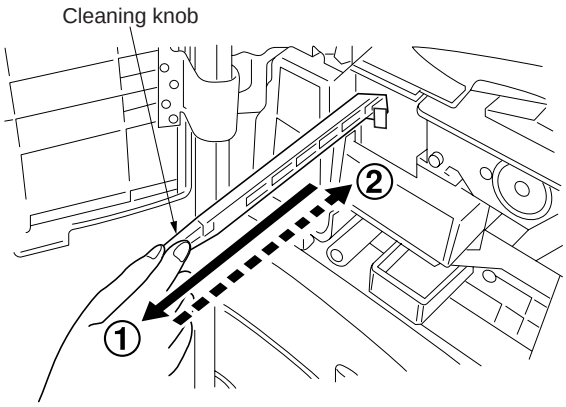

Figure 1-4-12

12. Take out the new grid cleaner from the protective bag, and then remove the cap from the grid cleaner.

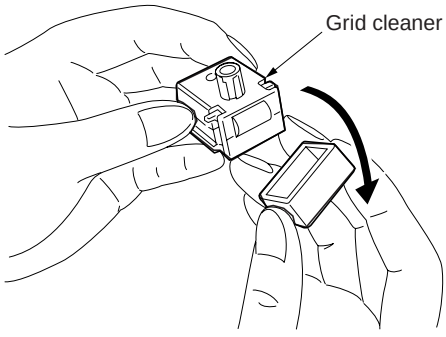

Figure 1-4-13

13. Attach the grid cleaner to the printer aligning with the notches.

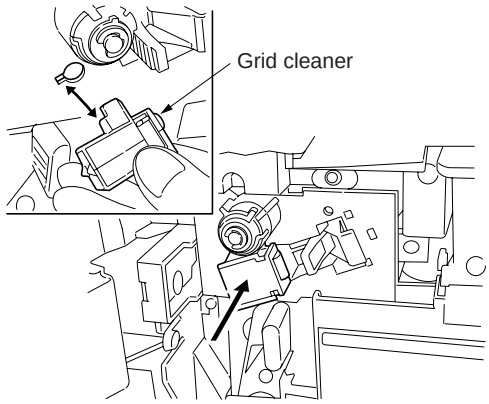

Figure 1-4-14

14. Gently pull the main charger unit as far as it will go, push and pull it several times, and then push it back in.
    When the grid is clean, remove the grid cleaner from the printer and dispose of it. The grid cleaner is not reusable.

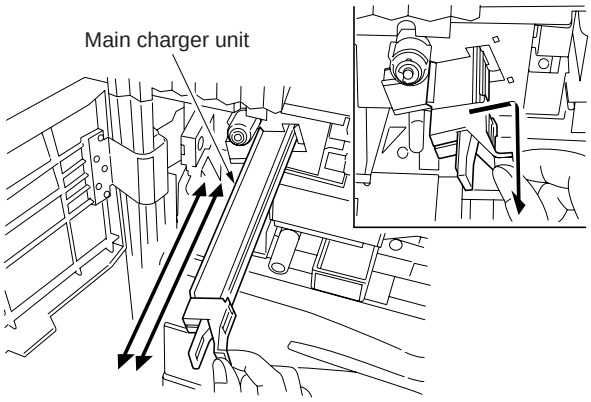

Figure 1-4-15

15. Fit the new waste toner box to the printer.

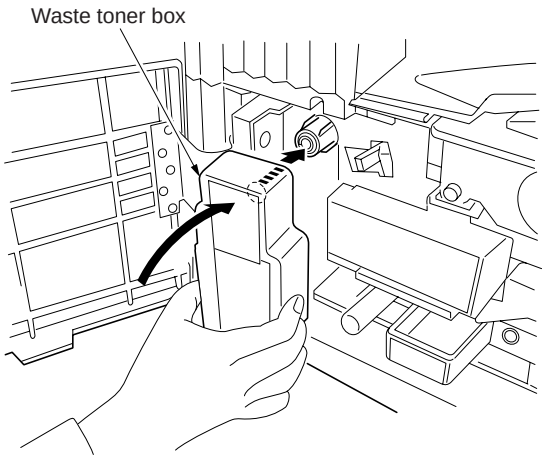

Figure 1-4-16

16. Remove the blue colored cleaning brush.

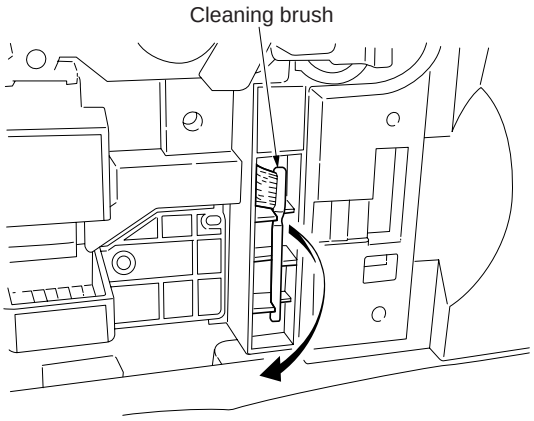

Figure 1-4-17

17. Pull up the conveying cover lock lever on the left side of the printer, and open the conveying cover.

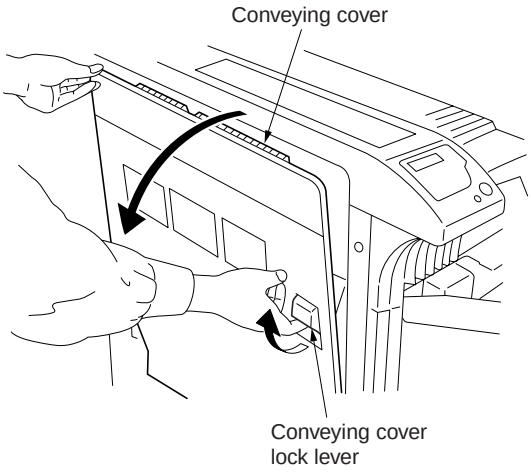

Figure 1-4-18

18. Clean the separator by moving the cleaning brush from left to right along with the separator.
19. Replacing of toner and cleaning of the internal parts of the printer are completed.

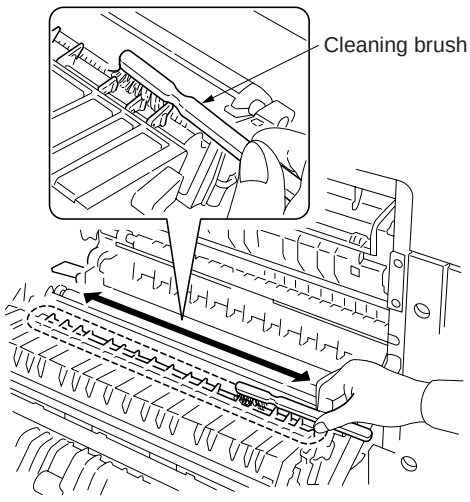

Figure 1-4-19

CONTENTS

1-5 Troubleshooting

1-5-1 Paper misfeed detection 1-5-1
(1) Paper misfeed indication 1-5-1
(2) Paper misfeed detection conditions 1-5-2
(3) Paper misfeeds 1-5-12
1-5-2 Self-diagnosis 1-5-21
(1) Self-diagnostic function 1-5-21
(2) Self diagnostic codes 1-5-22
1-5-3 Image formation problems 1-5-35
(1) No image appears (entirely white). 1-5-36
(2) No image appears (entirely black). 1-5-36
(3) Image is too light. 1-5-37
(4) Background is visible. 1-5-37
(5) A white line appears longitudinally. 1-5-37
(6) A black line appears longitudinally. 1-5-38
(7) A black line appears laterally. 1-5-38
(8) One side of the copy image is darker than the other. 1-5-38
(9) Black dots appear on the image. 1-5-39
(10) Image is blurred. 1-5-39
(11) The leading edge of the image is misaligned with the original image. 1-5-39
(12) Paper creases. 1-5-40
(13) Offset occurs. 1-5-40
(14) Image is partly missing. 1-5-40
(16) Image is out of focus. 1-5-41
(15) Fusing is poor. 1-5-41
(17) Image is not square. 1-5-41
1-5-4 Electrical problems 1-5-42
(1) The machine does not operate when the power switch is turned on. 1-5-42
(2) The drive motor does not operate (C2000). 1-5-42
(3) The paper feed motor does not operate (C2500). 1-5-42
(4) The eject motor does not operate. 1-5-42
(5) The upper lift motor does not operate (C1010). 1-5-43
(6) The lower lift motor does not operate (C1020). 1-5-43
(7) Cooling fan motor 1 does not operate. 1-5-43
(8) Cooling fan motor 2 does not operate. 1-5-43
(9) Cooling fan motor 3 does not operate. 1-5-43
(10) Cooling fan motor 4 does not operate. 1-5-43
(11) Cooling fan motor 5 does not operate. 1-5-43
(12) Cooling fan motor 6 does not operate. 1-5-44
(13) Cooling fan motor 7 does not operate. 1-5-44
(14) Cooling fan motor 8 does not operate. 1-5-44
(15) The upper paper feed clutch does not operate. 1-5-44
(16) The lower paper feed clutch does not operate. 1-5-44
(17) Feed clutch 1 does not operate. 1-5-44
(18) Feed clutch 2 does not operate. 1-5-44
(19) Feed clutch 3 does not operate. 1-5-45
(20) The MP paper feed clutch does not operate. 1-5-45
(21) The MP feed clutch does not operate. 1-5-45

(22) The registration clutch does not operate. 1-5-45
(23) The feedshift solenoid does not operate. 1-5-45
(24) The toner feed solenoid does not operate. 1-5-45
(25) The cleaning lamp does not turn on. 1-5-46
(26) The fuser heater does not turn on (C6000). 1-5-46
(27) The fuser heater does not turn off. 1-5-46
(28) Main charging is not performed. 1-5-46
(29) Transfer charging is not performed. 1-5-46
(30) No developing bias is output. 1-5-46
(31) The message requesting paper to be loaded is shown when paper is present in the upper cassette. 1-5-46
(32) The message requesting paper to be loaded is shown when paper is present in the lower cassette. 1-5-47
(33) The message requesting paper to be loaded is shown when paper is present on the MP tray. 1-5-47
(34) The size of paper in the upper cassette is not displayed correctly. 1-5-47
(35) The size of paper in the lower cassette is not displayed correctly. 1-5-47
(36) The printing width of the paper on the MP tray is not detected correctly. 1-5-47
(37) A paper jam in the paper feed, paper conveying or fuser section is indicated when the power switch is turned on. 1-5-48
(38) The message requesting covers to be closed is displayed when the front cover and conveying cover are closed. 1-5-48
(39) Others. 1-5-48
1-5-5 Mechanical problems 1-5-49
(1) No primary paper feed. 1-5-49
(2) No secondary paper feed. 1-5-49
(3) Skewed paper feed. 1-5-49
(4) Multiple sheets of paper are fed at one time. 1-5-49
(5) Paper jams. 1-5-49
(6) Toner drops on the paper conveying path. 1-5-49
(7) Abnormal noise is heard. 1-5-50
1-5-6 Repetitive defects gauge 1-5-51
(1) Repetitive defects gauge. 1-5-51

1-5-1 Paper misfeed detection

(1) Paper misfeed indication

When a paper misfeed occurs, the printer immediately stops printing and displays the jam location on the operation panel. To remove paper jammed in the printer, open the front cover, conveying cover, side cover or cassette.

Jam code	Contents	See page
10	No paper feed from the upper cassette	P.1-5-3
11	No paper feed from the lower cassette	P.1-5-3
12	No paper feed from paper feeder PF-75*/PF-70* upper cassette	P.1-5-3
13	No paper feed from paper feeder PF-70* lower cassette	P.1-5-3
14	No paper feed from MP tray	P.1-5-4
15	Jam in paper feeder PF-75* horizontal paper conveying section	P.1-5-4
16	Jam in paper feeder PF-75* horizontal paper conveying section	P.1-5-4
17	Jam in paper feeder PF-75* horizontal paper conveying section	P.1-5-4
18	Misfeed in printer vertical paper conveying section	P.1-5-4
19	Misfeed in paper feeder PF-70* vertical paper conveying section	P.1-5-5
20	Misfeed in MP tray vertical paper conveying section	P.1-5-5
21	Multiple sheets in printer paper feed section	P.1-5-5
22	Multiple sheets in printer vertical conveying section	P.1-5-7
23	Multiple sheets in MP tray vertical conveying section	P.1-5-7
30	Misfeed in registration/transfer section	P.1-5-8
35	Secondary paper feed does not start	P.1-5-8
40	Misfeed in fuser section	P.1-5-8
50	Misfeed in eject section	P.1-5-9
52	Misfeed in feedshift section	P.1-5-9
53	Misfeed in switchback section (switchback unit*)	P.1-5-10
60	Duplex paper conveying section 1	P.1-5-11
61	Duplex paper conveying section 2	P.1-5-11

*Optional.

(2) Paper misfeed detection conditions

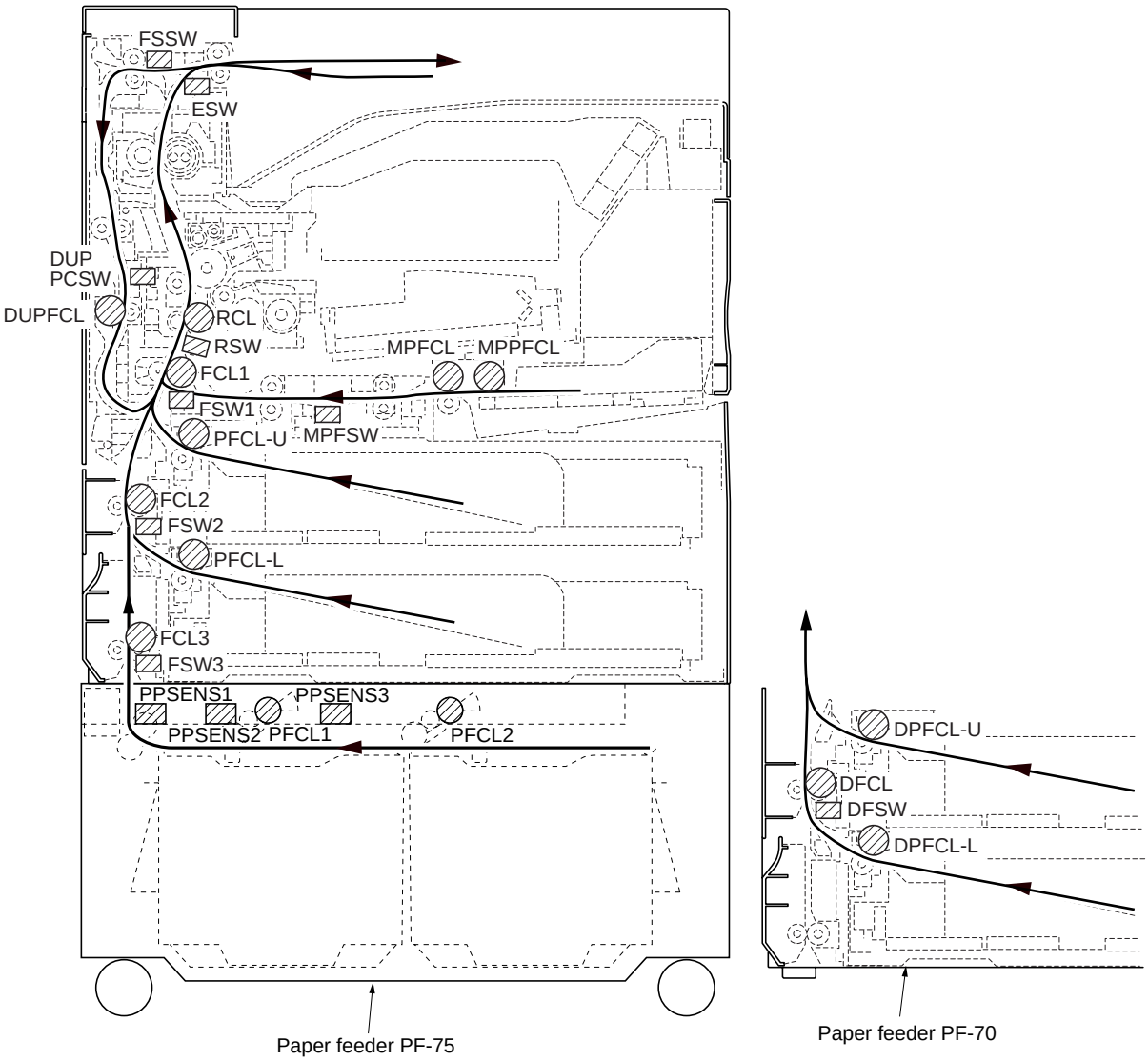

Figure 1-5-1

1. Paper feed section

• No paper feed from the upper cassette (jam code 10)

Feed switch 1 (FSW1) does not turn on within 841 ms of the upper paper feed clutch (PFCL-U) turning on; the clutch is then successively turned off for 1 s and turned back on, but the switch again fails to turn on within 841 ms.

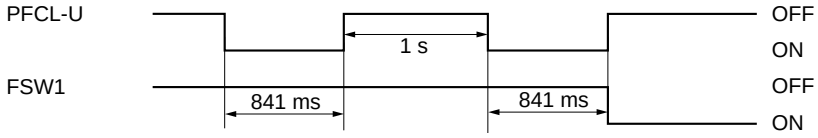

Timing chart 1-5-1

• No paper feed from the lower cassette (jam code 11)

Feed switch 2 (FSW2) does not turn on within 882 ms of the lower paper feed clutch (PFCL-L) turning on; the clutch is then successively turned off for 1 s and turned back on, but the switch again fails to turn on within 882 ms.

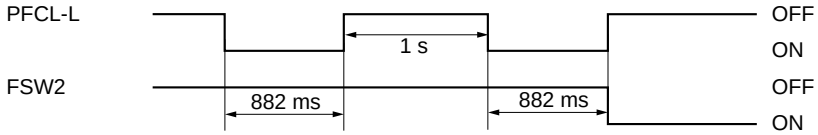

Timing chart 1-5-2

• No paper feed from paper feeder PF-75* (jam code 12)

Feed switch 3 (FSW3) does not turn on within 650 ms of paper feed clutch 1 (PFCL1) turning on.

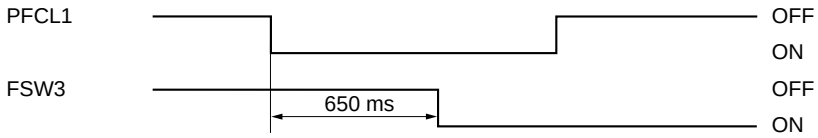

Timing chart 1-5-3

• No paper feed from paper feeder PF-70* upper cassette (jam code 12)

Feed switch 3 (FSW3) does not turn on within 880 ms of the desk upper paper feed clutch (DPFCL-U) turning on; the clutch is then successively held off for 1 s and turned back on, but the switch again fails to turn on within 880 ms.

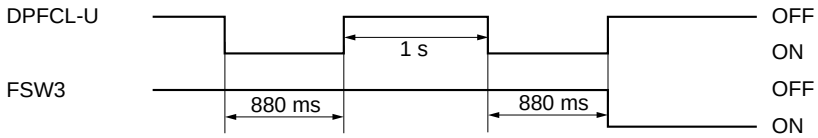

Timing chart 1-5-4

• No paper feed from paper feeder PF-70* lower cassette (jam code 13)

Desk feed switch (DFSW) does not turn on within 880 ms of the desk lower paper feed clutch (DPFCL-L) turning on; the clutch is then successively held off for 1 s and turned back on, but the switch again fails to turn on within 880 ms.

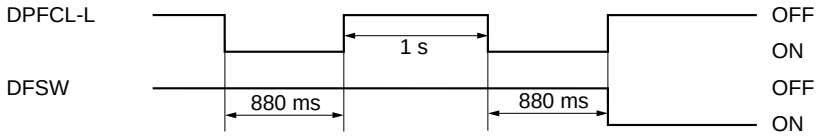

Timing chart 1-5-5

*Optional.

• No paper feed from MP tray (jam code 14)
The MP feed switch (MPFSW) does not turn on within 1730 ms of the MP paper feed clutch (MPPFCL) turning on; the clutch is then successively held off for 1 s and turned back on, but the switch again fails to turn on within 1730 ms.

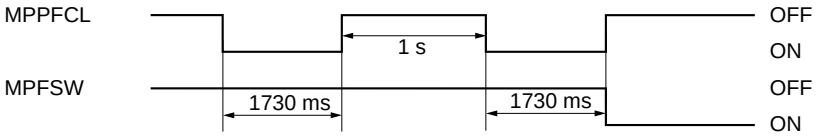

Timing chart 1-5-6

• Jam in paper feeder PF-75* horizontal paper conveying section (jam code 15)
Paper path sensor 3 (PPSENS3) does not turn on within 290 ms of the paper feed clutch 2 (PFCL2) turning on.

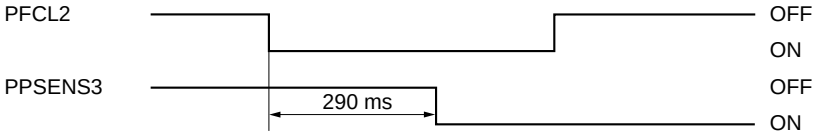

Timing chart 1-5-7

• Jam in paper feeder PF-75* horizontal paper conveying section (jam code 16)
Paper path sensor 2 (PPSENS2) does not turn on within 310 ms of the paper path sensor 3 (PPSENS3) turning on.

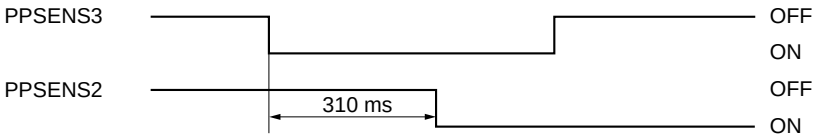

Timing chart 1-5-8

• Jam in paper feeder PF-75* horizontal paper conveying section (jam code 17)
Paper path sensor 1 (PPSENS1) does not turn on within 190 ms of the paper path sensor 2 (PPSENS2) turning on.

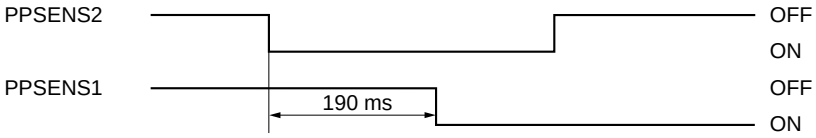

Timing chart 1-5-9

• Misfeed in printer vertical paper conveying section (jam code 18)
The registration switch (RSW) does not turn on within 936 ms of feed switch 1 (FSW1) turning on.

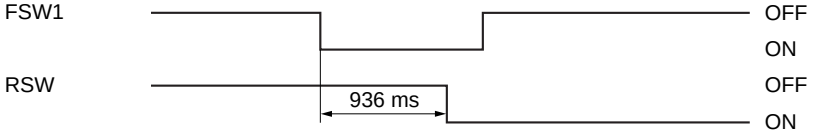

Timing chart 1-5-10

*Optional.

Feed switch 1 (FSW1) does not turn on within 1079 ms of feed switch 2 (FSW2) turning on.

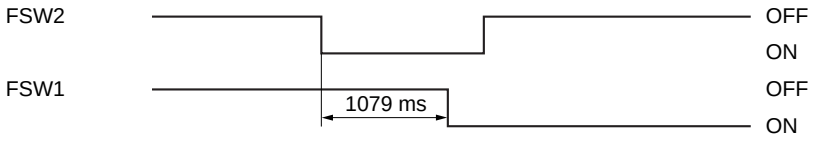

Timing chart 1-5-11

Feed switch 2 (FSW2) does not turn on within 1203 ms of feed switch 3 (FSW3) turning on.

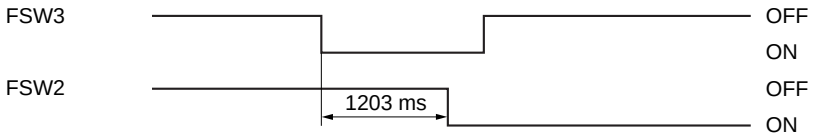

Timing chart 1-5-12

• Misfeed in paper feeder PF-70* vertical paper conveying section (jam code 19)
Feed switch 3 (FSW3) does not turn on within 888 ms of the desk feed switch (DFSW) turning on.

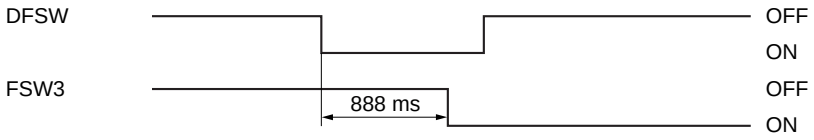

Timing chart 1-5-13

• Misfeed in MP tray vertical paper conveying section (jam code 20)
The registration switch (RSW) does not turn on within 3932 ms of the MP feed switch (MPFSW) turning on.

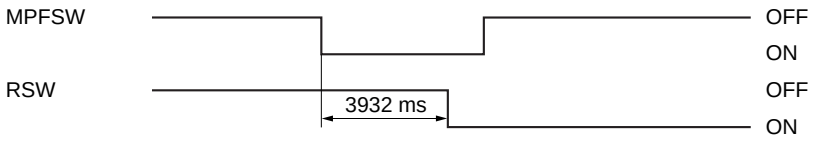

Timing chart 1-5-14

• Multiple sheets in printer paper feed section (jam code 21)
Feed switch 1 (FSW1) does not turn off within the time required to convey the length of the used paper size plus 1123 ms of turning on.

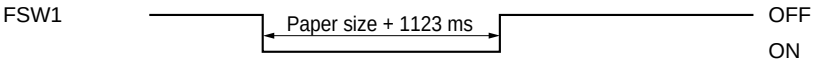

Timing chart 1-5-15

Feed switch 2 (FSW2) does not turn off within the time required to convey the length of the used paper size plus 1123 ms of turning on.

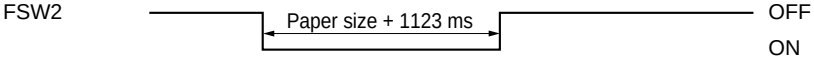

Timing chart 1-5-16

*Optional.

Feed switch 3 (FSW3) does not turn off within the time required to convey the length of the used paper size plus 635 ms of turning on.

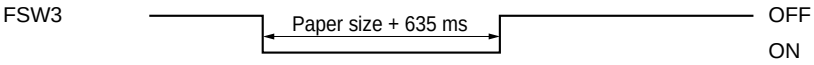

Timing chart 1-5-17

The desk feed switch (DFSW) does not turn off within the time required to convey the length of the used paper size plus 635 ms of turning on.

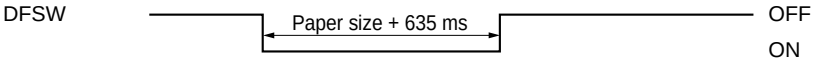

Timing chart 1-5-18

The MP feed switch (MPFSW) does not turn off within the time required to convey the length of the used paper size plus 1123 ms of turning on.

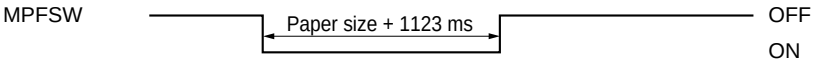

Timing chart 1-5-19

Feed switch 1 (FSW1) does not turn off within 841 ms of the upper paper feed clutch (PFCL-U) turning on.

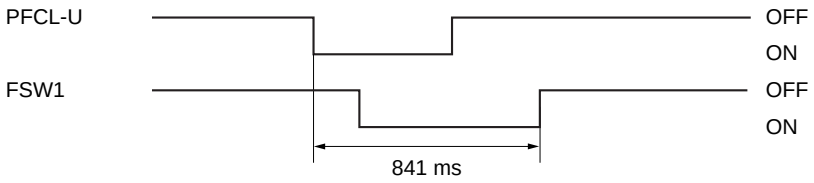

Timing chart 1-5-20

Feed switch 2 (FSW2) does not turn off within 882 ms of the lower paper feed clutch (PFCL-L) turning on.

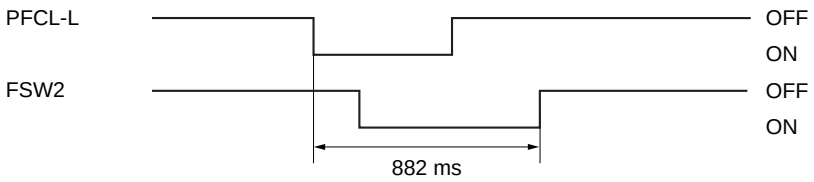

Timing chart 1-5-21

The MP feed switch (MPFSW) does not turn off within 1730 ms of the MP paper feed clutch (MPPFCL) turning on.

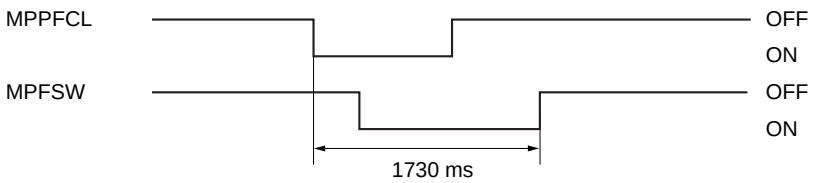

Timing chart 1-5-22

*Optional.

• Multiple sheets in printer vertical conveying section (jam code 22)
Feed switch 1 (FSW1) does not turn off within 1910 ms of feed switch 2 (FSW2) turning off.

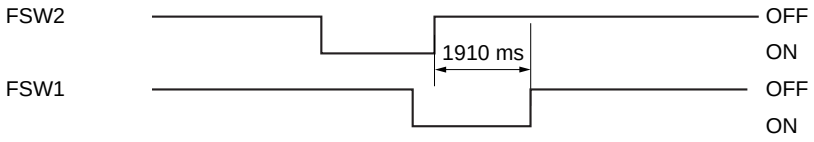

Timing chart 1-5-23

Feed switch 2 (FSW2) does not turn off within 1203 ms of feed switch 3 (FSW3) turning off.

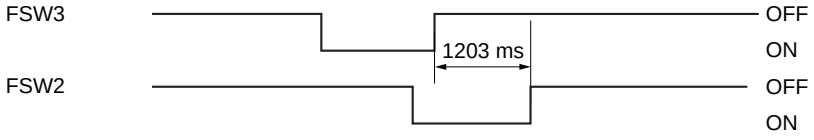

Timing chart 1-5-24

Feed switch 1 (FSW1) does not turn off within 1910 ms of feed switch 2 (FSW2) turning on.

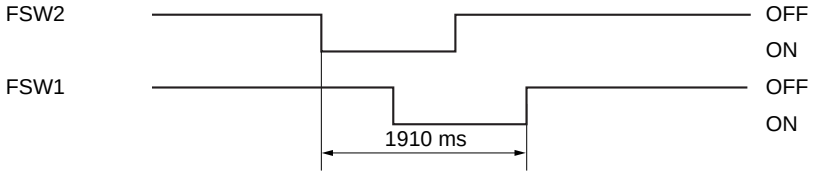

Timing chart 1-5-25

Feed switch 2 (FSW2) does not turn off within 1203 ms of feed switch 3 (FSW3) turning on.

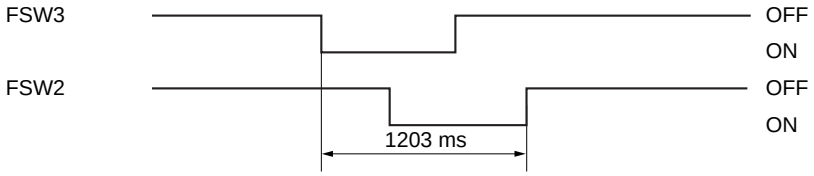

Timing chart 1-5-26

• Multiple sheets in MP tray vertical conveying section (jam code 23)
The registration switch (RSW) does not turn off within 1510 ms of the MP feed switch (MPFSW) turning off.

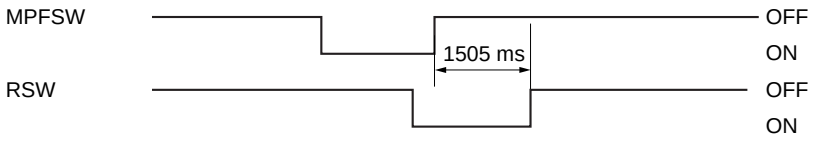

Timing chart 1-5-27

The registration switch (RSW) does not turn off within 1505 ms of the MP feed switch (MPFSW) turning on.

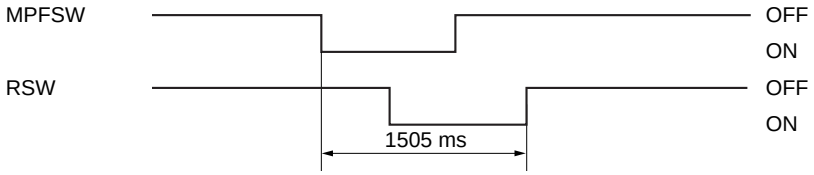

Timing chart 1-5-28

2. Paper conveying section

• Misfeed in registration/transfer section (jam code 30)

The registration switch (RSW) does not turn off within 1657 ms of feed switch 1 (FSW1) turning off.

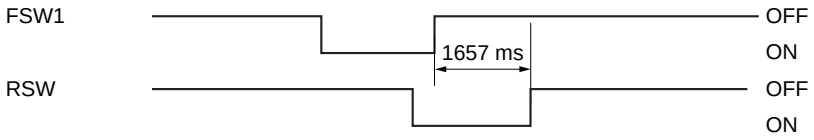

Timing chart 1-5-29

The registration switch (RSW) does not turn off within 1657 ms of feed switch 1 (FSW1) turning on.

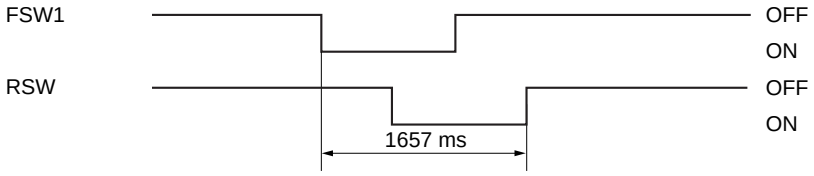

Timing chart 1-5-30

• Secondary paper feed does not start. (jam code 35)

Secondary paper feed does not start within 30 s of arrival of paper at the registration section.

3. Fuser section

• Misfeed in fuser section (jam code 40)

The eject switch (ESW) does not turn on within 2898/2242* ms of the registration clutch (RCL) turning on.

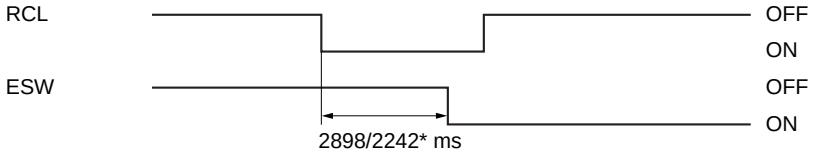

*: FS-9100DN/9500DN

Timing chart 1-5-31

The feedshift switch (FSSW) does not turn on within 2983/2308* ms of the registration clutch (RCL) turning on.

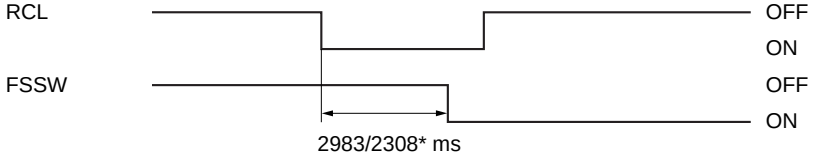

*: FS-9100DN/9500DN

Timing chart 1-5-32

4. Eject section

• Misfeed in eject section (jam code 50)

The eject switch (ESW) does not turn off within 2898/2242* ms of the registration switch (RSW) turning off.

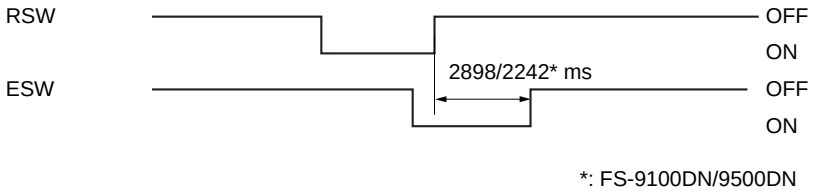

Timing chart 1-5-33

The eject switch (ESW) does not turn off within 2898/2308* ms of the registration clutch (RCL) turning on.

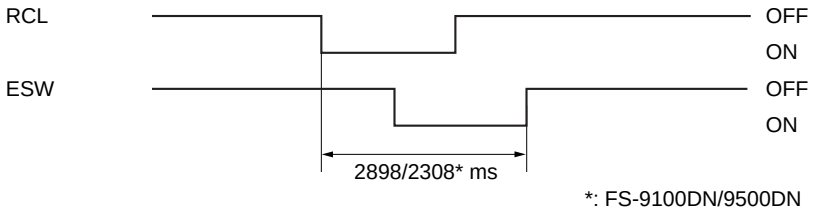

Timing chart 1-5-34

5. Feedshift section

• Misfeed in feedshift section (jam code 52)

The feedshift switch (FSSW) does not turn on within 873 ms of the start of eject motor (EM) reverse rotation.

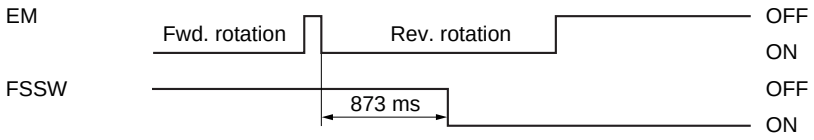

Timing chart 1-5-35

During paper switchback operation, the feedshift switch (FSSW) does not turn off within the time required to convey the length of the used paper size plus 317 ms of turning on.

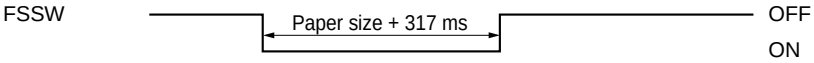

Timing chart 1-5-36

The feedshift switch (FSSW) does not turn off within 2898/2242* ms of the registration switch (RSW) turning off.

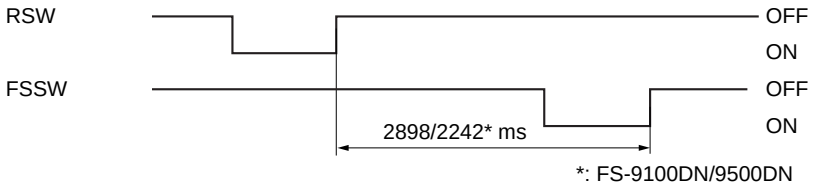

Timing chart 1-5-37

The feedshift switch (FSSW) does not turn off within 2898/2242* ms of the registration clutch (RCL) turning on.

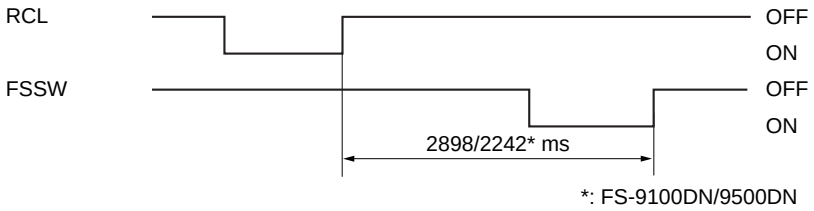

Timing chart 1-5-38

6. Switchback unit*

• Misfeed in switchback section (jam code 53)

The switchback eject switch (SBESW) does not turn off within 1421 ms (2797 ms) of the feedshift switch (FSSW) turning on.

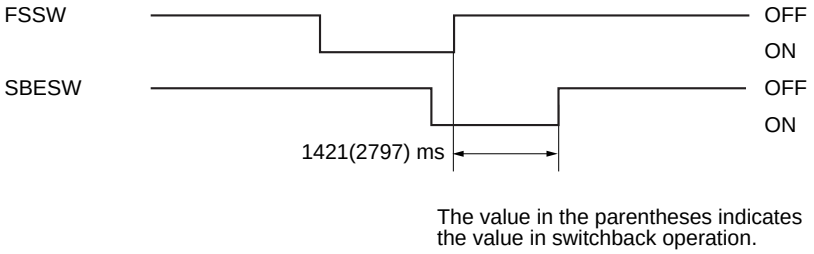

Timing chart 1-5-39

The switchback eject switch (SBESW) does not turn on within 1421 ms (2797 ms) of the feedshift switch (FSSW) turning on.

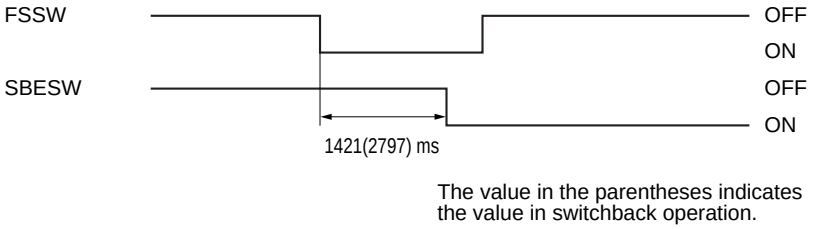

Timing chart 1-5-40

The switchback eject switch (SBESW) does not turn off within 1421 ms (2797 ms) of the feedshift switch (FSSW) turning off.

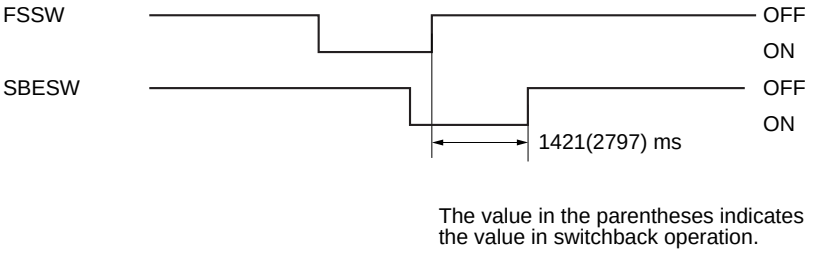

Timing chart 1-5-41

*Optional.

7. Duplex section

• Duplex paper conveying section 1 (jam code 60)

The duplex paper conveying switch (DUPPCSW) does not turn on within 1285 ms of the feedshift switch (FSSW) turning on.

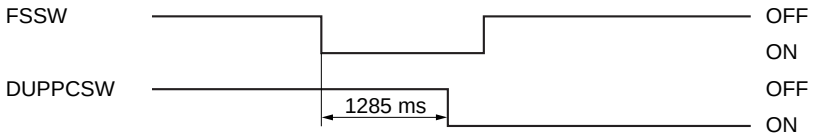

Timing chart 1-5-42

The duplex paper conveying switch (DUPPCSW) does not turn off within 1285 ms of the feedshift switch (FSSW) turning off.

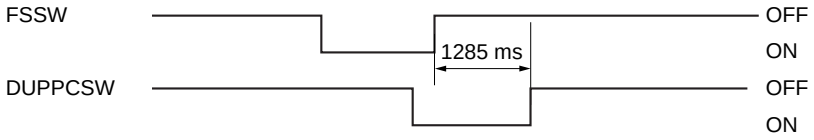

Timing chart 1-5-43

• Duplex paper conveying section 2 (jam code 61)

Feed switch 1 (FSW1) does not turn on within 1126 ms of the duplex paper conveying switch (DUPPCSW) turning on.

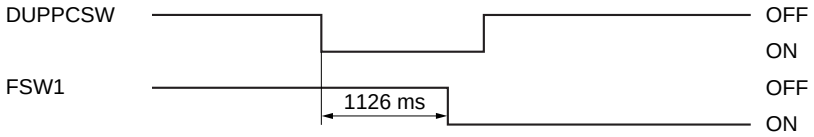

Timing chart 1-5-44

Feed switch 1 (FSW1) does not turn off within 1126 ms of the duplex paper conveying switch (DUPPCSW) turning off.

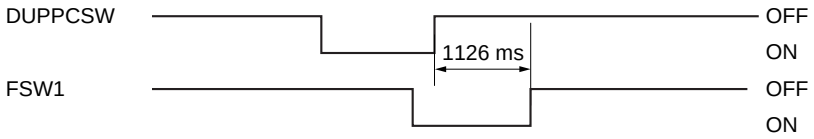

Timing chart 1-5-45

(3) Paper misfeeds

Problem	Causes/check procedures	Corrective measures
(1) A paper jam in the paper feed, conveying or eject section is indicated as soon as the main switch is turned on.	A piece of paper torn from print paper is caught around feed switch 1/2/3, registration switch, eject switch or feedshift switch.	Check visually and remove it, if any.
	Defective feed switch 1, feed switch 2, feed switch 3, registration switch, eject switch or feedshift switch.	Run maintenance item U031 and turn switch on and off manually. If "1" is not displayed when the switch is on or "0" is not displayed when the switch is off, replace switch.
	Defective engine controller PWB.	When if all switches (above) are normal, replace engine controller PWB (see page 1-6-22).
(2) A paper jam in the paper feed section is indicated during printing (no paper feed from upper cassette). Jam code 10	Paper in the upper cassette is extremely curled.	Change the paper.
	Check if the upper paper feed pulley, separation pulley or forwarding pulley of the upper cassette are deformed.	Check visually and replace any deformed pulleys.
	Broken feed switch 1 actuator.	Check visually and replace feed switch 1 if its actuator is broken.
	Defective feed switch 1.	Run maintenance item U031 and turn feed switch 1 on and off manually. If "1" is not displayed when the switch is on or "0" is not displayed when the switch is off, replace feed switch 1.
	Defective engine controller PWB.	When if feed switch 1 (above) is normal, replace engine controller PWB (see page 1-6-22).
	Check if the upper paper feed clutch malfunctions.	Run maintenance item U032 and select the upper paper feed clutch on the operation panel to be turned on and off. Check the status and remedy if necessary.
	Electrical problem with the upper paper feed clutch.	Check (see page 1-5-45).
(3) A paper jam in the paper feed section is indicated during printing (no paper feed from lower cassette). Jam code 11	Paper in the lower cassette is extremely curled.	Change the paper.
	Check if the lower paper feed pulley, separation pulley or forwarding pulley of the lower cassette are deformed.	Check visually and replace any deformed pulleys.
	Broken feed switch 2 actuator.	Check visually and replace feed switch 2 if its actuator is broken.
	Defective feed switch 2.	Run maintenance item U031 and turn feed switch 2 on and off manually. If "1" is not displayed when the switch is on or "0" is not displayed when the switch is off, replace feed switch 2.
	Defective engine controller PWB.	When if feed switch 1 (above) is normal, replace engine controller PWB (see page 1-6-22).
	Check if the lower paper feed clutch malfunctions.	Run maintenance item U032 and select the lower paper feed clutch on the operation panel to be turned on and off. Check the status and remedy if necessary.

Problem	Causes/check procedures	Corrective measures
(3) A paper jam in the paper feed section is indicated during printing (no paper feed from lower cassette). Jam code 11	Electrical problem with the lower paper feed clutch.	Check (see page 1-5-45).
(4) A paper jam in the paper feed section is indicated during printing (no paper feed from paper feeder PF-75*). Jam code 12	Paper in the paper feeder PF-75 is extremely curled.	Change the paper.
	Broken feed switch 3 actuator.	Check visually and replace feed switch 3 if its actuator is broken.
	Defective feed switch 3.	Run maintenance item U031 and turn feed switch 3 on and off manually. If "1" is not displayed when the switch is on or "0" is not displayed when the switch is off, replace feed switch 3.
	Defective engine controller PWB.	When if feed switch 3 (above) is normal, replace engine controller PWB (see page 1-6-22).
	Check if paper feed clutch 1 and 2 malfunctions.	Check and remedy if necessary.
	Electrical problem with paper feed clutch 1 and 2.	Check.
	Check if the deck feed clutch malfunctions.	Check and remedy if necessary.
	Electrical problem with the deck feed clutch.	Check.
(5) A paper jam in the paper feed section is indicated during printing (no paper feed from paper feeder PF-70* upper cassette). Jam code 12	Paper in the paper feeder PF-70 upper cassette is extremely curled.	Change the paper.
	Check if the paper feed pulley, separation pulley or forwarding pulley of the paper feeder PF-70 upper cassette are deformed.	Check visually and replace any deformed pulleys.
	Broken feed switch 3 actuator.	Check visually and replace feed switch 3 if its actuator is broken.
	Defective feed switch 3.	Run maintenance item U031 and turn feed switch 3 on and off manually. If "1" is not displayed when the switch is on or "0" is not displayed when the switch is off, replace feed switch 3.
	Defective engine controller PWB.	When if feed switch 3 (above) is normal, replace engine controller PWB (see page 1-6-22).
	Check if the desk upper paper feed clutch malfunctions.	Check and remedy if necessary.
	Electrical problem with the desk upper paper feed clutch.	Check.

*Optional.

Problem	Causes/check procedures	Corrective measures
(6) A paper jam in the paper feed section is indicated during printing (no paper feed from paper feeder PF-70* lower cassette). Jam code 13	Paper in the paper feeder PF-70 lower cassette is extremely curled.	Change the paper.
	Check if the paper feed pulley, separation pulley or forwarding pulley of the paper feeder PF-70 lower cassette are deformed.	Check visually and replace any deformed pulleys.
	Broken desk feed switch actuator.	Check visually and replace desk feed switch if its actuator is broken.
	Defective desk feed switch.	With 5 V DC present at CN2-8 on the desk main board, check if CN2-7 on the desk main board remains low when the desk feed switch is turned on and off. If it does, replace the desk feed switch.
	Check if the desk lower paper feed clutch malfunctions.	Check and remedy if necessary.
	Electrical problem with the desk lower paper feed clutch.	Check.
(7) A paper jam in the paper feed section is indicated during printing (no paper feed from MP tray). Jam code 14	Paper on the MP tray is extremely curled.	Change the paper.
	Check if the MP paper feed pulley, separation pulley or forwarding pulley of the MP tray are deformed.	Check visually and replace any deformed pulleys.
	Broken MP feed switch actuator.	Check visually and replace MP feed switch if its actuator is broken.
	Defective MP feed switch.	Run maintenance item U031 and turn the MP feed switch on and off manually. If "1" is not displayed when the switch is on or "0" is not displayed when the switch is off, replace MP feed switch.
	Defective engine controller PWB.	When if MP feed switch (above) is normal, replace engine controller PWB (see page 1-6-22).
	Check if the MP paper feed clutch malfunctions.	Run maintenance item U032 and select the MP paper feed clutch on the operation panel to be turned on and off. Check the status and remedy if necessary.
	Electrical problem with the MP paper feed clutch.	Check (see page 1-5-46).

*Optional.

Problem	Causes/check procedures	Corrective measures
(8) A paper jam in the paper feed section is indicated during printing (jam in paper feeder PF-75* horizontal paper conveying section). Jam code 15	Paper in the paper feeder PF-75 is extremely curled.	Change the paper.
	Check if the paper side guides are deformed.	Check visually and replace.
	Defective paper path sensor 3.	With 5 V DC present at CN6-12 on the deck main board, check if CN6-11 on the deck main board remains low when paper path sensor 3 is turned on and off. If it does, replace paper path sensor 3.
	Check if paper feed clutch 2 malfunctions.	Check and remedy if necessary.
	Electrical problem with paper feed clutch 2.	Check.
(9) A paper jam in the paper feed section is indicated during printing (jam in paper feeder PF-75* horizontal paper conveying section). Jam code 16	Paper in the paper feeder PF-75 is extremely curled.	Change the paper.
	Check if the paper side guides are deformed.	Check visually and replace.
	Defective paper path sensor 2.	With 5 V DC present at CN6-9 on the deck main board, check if CN6-8 on the deck main board remains low when paper path sensor 2 is turned on and off. If it does, replace paper path sensor 2.
	Check if paper feed clutch 1 malfunctions.	Check and remedy if necessary.
	Electrical problem with paper feed clutch 1.	Check.
(10) A paper jam in the paper feed section is indicated during printing (jam in paper feeder PF-75* horizontal paper conveying section). Jam code 17	Paper in the paper feeder PF-75 is extremely curled.	Change the paper.
	Check if the paper side guides are deformed.	Check visually and replace.
	Defective paper path sensor 1.	With 5 V DC present at CN6-6 on the deck main board, check if CN6-5 on the deck main board remains low when paper path sensor 1 is turned on and off. If it does, replace paper path sensor 1.
	Check if the deck feed clutch malfunctions.	Check and remedy if necessary.
	Electrical problem with the deck feed clutch.	Check.

*Optional.

Problem	Causes/check procedures	Corrective measures
(11) A paper jam in the paper feed section is indicated during printing (jam in printer vertical paper conveying section). Jam code 18	Broken feed switch 1 actuator, feed switch 2 actuator or feed switch 3 actuator.	Check visually and replace the switch if its actuator is broken.
	Defective feed switch 1, feed switch 2, feed switch 3 or registration switch.	Run maintenance item U031 and turn switch on and off manually. If "1" is not displayed when the switch is on or "0" is not displayed when the switch is off, replace switch.
	Defective engine controller PWB.	When if all switches (above) are normal, replace engine controller PWB (see page 1-6-22).
	Check if the feed pulleys and feed roller are deformed.	Check and repair if necessary.
(12) A paper jam in the paper feed section is indicated during printing (jam in paper feeder PF-70* vertical conveying section). Jam code 19	Broken feed switch 3 actuator.	Check visually and replace feed switch 3 if its actuator is broken.
	Defective feed switch 3.	Run maintenance item U031 and turn feed switch 3 on and off manually. If "1" is not displayed when the switch is on or "0" is not displayed when the switch is off, replace feed switch 3.
	Defective engine controller PWB.	When if feed switch 3 (above) is normal, replace engine controller PWB (see page 1-6-22).
	Broken desk feed switch actuator.	Check visually and replace desk feed switch if its actuator is broken.
	Defective desk feed switch.	With 5 V DC present at CN2-8 on the desk main board, check if CN2-7 on the desk main board remains low when the desk feed switch is turned on and off. If it does, replace the desk feed switch.
(13) A paper jam in the paper feed section is indicated during printing (jam in MP tray conveying section). Jam code 20	Broken MP feed switch actuator.	Check visually and replace the MP feed switch if its actuator is broken.
	Defective MP feed switch or registration switch.	Run maintenance item U031 and turn switch on and off manually. If "1" is not displayed when the switch is on or "0" is not displayed when the switch is off, replace switch.
	Defective engine controller PWB.	When if switch (above) is normal, replace engine controller PWB (see page 1-6-22).
(14) A paper jam in the paper feed section is indicated during printing (multiple sheets in printer paper feed section). Jam code 21	Broken feed switch 1 actuator, feed switch 2 actuator, feed switch 3 actuator, desk feed switch* actuator or MP feed switch actuator.	Check visually and replace switch 1 if its actuator is broken.
	Defective feed switch 1, feed switch 2, feed switch 3 or MP feed switch.	Run maintenance item U031 and turn switch on and off manually. If "1" is not displayed when the switch is on or "0" is not displayed when the switch is off, replace switch.
	Defective engine controller PWB.	When if all switches (above) are normal, replace engine controller PWB (see page 1-6-22).
	Defective desk feed switch*.	With 5 V DC present at CN2-8 on the desk main board, check if CN2-7 on the desk main board remains low when the desk feed switch is turned on and off. If it does, replace the desk feed switch.

*Optional.

Problem	Causes/check procedures	Corrective measures
(14) A paper jam in the paper feed section is indicated during printing (multiple sheets in printer paper feed section). Jam code 21	Check if the upper paper feed clutch malfunctions.	Run maintenance item U032 and select the upper paper feed clutch on the operation panel to be turned on and off. Check the status and remedy if necessary.
	Electrical problem with the upper paper feed clutch.	Check (see page 1-5-45).
	Check if the lower paper feed clutch malfunctions.	Run maintenance item U032 and select the lower paper feed clutch on the operation panel to be turned on and off. Check the status and remedy if necessary.
	Electrical problem with the lower paper feed clutch.	Check (see page 1-5-45).
	Check if the MP paper feed clutch malfunctions.	Run maintenance item U032 and select the MP feed clutch on the operation panel to be turned on and off. Check the status and remedy if necessary.
	Electrical problem with the MP paper feed clutch.	Check (see page 1-5-45).
	Check if the feed pulleys and feed roller are deformed.	Check and repair if necessary.
(15) A paper jam in the paper feed section is indicated during printing (multiple sheets in printer vertical conveying section). Jam code 22	Broken feed switch 1 actuator, feed switch 2 actuator or feed switch 3 actuator.	Check visually and replace switch if its actuator is broken.
	Defective feed switch 1, feed switch 2 or feed switch 3.	Run maintenance item U031 and turn switch on and off manually. If "1" is not displayed when the switch is on or "0" is not displayed when the switch is off, replace switch.
	Defective engine controller PWB.	When if all switches (above) are normal, replace engine controller PWB (see page 1-6-22).
(16) A paper jam in the paper feed section is indicated during printing (multiple sheets in MP tray conveying section). Jam code 23	Check if the feed pulleys and feed roller are deformed.	Check and repair if necessary.
	Broken MP feed switch actuator.	Check visually and replace the MP feed switch if its actuator is broken.
	Defective MP feed switch or registration switch.	Run maintenance item U031 and turn switch on and off manually. If "1" is not displayed when the switch is on or "0" is not displayed when the switch is off, replace switch.
	Defective engine controller PWB.	When if MP feed switch and registration switch (above) are normal, replace engine controller PWB (see page 1-6-22).
(17) A paper jam in the paper conveying section is indicated during printing (jam in registration/transfer section). Jam code 30	Broken feed switch 1 actuator.	Check visually and replace the switch if its actuator is broken.
	Defective feed switch 1 or registration switch.	Run maintenance item U031 and turn switch on and off manually. If "1" is not displayed when the switch is on or "0" is not displayed when the switch is off, replace switch.
	Defective engine controller PWB.	When if feed switch 1 and registration switch (above) are normal, replace engine controller PWB (see page 1-6-22).

*Optional.

Problem	Causes/check procedures	Corrective measures
(18) A paper jam in the paper conveying section is indicated during printing Jam code 35	Defective registration switch.	Run maintenance item U031 and turn the registration switch on and off manually. If "1" is not displayed when the switch is on or "0" is not displayed when the switch is off, replace registration switch.
	Defective engine controller PWB.	When if registration switch (above) is normal, replace engine controller PWB (see page 1-6-22).
	Check if the registration clutch malfunctions.	Run maintenance item U032 and select the registration clutch on the operation panel to be turned on and off. Check the status and remedy if necessary.
	Electrical problem with the registration clutch.	Check (see page 1-5-46).
(19) A paper jam in the fixing section is indicated during printing (jam in fuser section). Jam code 40	Broken eject switch actuator or feedshift switch actuator.	Check visually and replace the eject switch if its actuator is broken.
	Defective eject switch or feedshift switch.	Run maintenance item U031 and turn switch on and off manually. If "1" is not displayed when the switch is on or "0" is not displayed when the switch is off, replace switch.
	Defective engine controller PWB.	When if eject switch and feedshift switch (above) are normal, replace engine controller PWB (see page 1-6-22).
	Check if the registration clutch malfunctions.	Run maintenance item U032 and select the registration clutch on the operation panel to be turned on and off. Check the status and remedy if necessary.
	Electrical problem with the registration clutch.	Check (see page 1-5-46).
(20) A paper jam in the eject section is indicated during printing (jam in eject section). Jam code 50	Broken eject switch actuator.	Check visually and replace the eject switch if its actuator is broken.
	Defective eject switch.	Run maintenance item U031 and turn the eject switch on and off manually. If "1" is not displayed when the switch is on or "0" is not displayed when the switch is off, replace eject switch.
	Defective engine controller PWB.	When if eject switch (above) is normal, replace engine controller PWB (see page 1-6-22).

Problem	Causes/check procedures	Corrective measures
(22) A paper jam in the feedshift section is indicated during printing (jam in feedshift section). Jam code 52	Check if the feedshift solenoid malfunctions.	Run maintenance item U033 and select the feedshift solenoid on the operation panel to be turned on and off. Check the status and remedy if necessary.
	Electrical problem with the feedshift solenoid.	Check (see page 1-5-46).
	Broken feedshift switch actuator.	Check visually and replace the feedshift switch if its actuator is broken.
	Defective feedshift switch or registration switch.	Run maintenance item U031 and turn switch on and off manually. If "1" is not displayed when the switch is on or "0" is not displayed when the switch is off, replace switch.
	Defective engine controller PWB.	When if feedshift switch and registration switch (above) are normal, replace engine controller PWB (see page 1-6-22).
	Check if the registration clutch malfunctions.	Run maintenance item U032 and select the registration clutch on the operation panel to be turned on and off. Check the status and remedy if necessary.
	Electrical problem with the registration clutch.	Check (see page 1-5-46).
(23) A paper jam in the switchback section is indicated during printing (jam in switchback unit*). Jam code 53	Broken feedshift switch actuator, or switchback eject switch actuator.	Check visually and replace the switch if its actuator is broken.
	Defective feedshift switch.	Run maintenance item U031 and turn the feedshift switch on and off manually. If "1" is not displayed when the switch is on or "0" is not displayed when the switch is off, replace feedshift switch.
	Defective engine controller PWB.	When if feedshift switch (above) is normal, replace engine controller PWB (see page 1-6-22).
	Defective switchback eject switch.	With 5 V DC present at CN5-2 on the switchback unit main board, check if CN5-4 on the switchback unit main board remains low when the switchback eject switch is turned on and off. If it does, replace the switchback eject switch.

*Optional.

Problem	Causes/check procedures	Corrective measures
(24) A paper jam in the duplex section is indicated during printing (jam in duplex paper conveying section 1). Jam code 60	Broken feedshift switch actuator or duplex paper conveying switch actuator.	Check visually and replace the switch if its actuator is broken.
	Defective feedshift switch or duplex paper conveying switch.	Run maintenance item U031 and turn switch on and off manually. If "1" is not displayed when the switch is on or "0" is not displayed when the switch is off, replace switch.
	Defective engine controller PWB.	When if the feedshift switch and duplex paper conveying switch (above) are normal, replace engine controller PWB (see page 1-6-22).
(25) A paper jam in the duplex section is indicated during printing (jam in duplex paper conveying section 2). Jam code 61	Broken duplex paper conveying switch actuator or feed switch 1 actuator.	Check visually and replace the switch if its actuator is broken.
	Defective duplex paper conveying switch or feed switch 1.	Run maintenance item U031 and turn switch on and off manually. If "1" is not displayed when the switch is on or "0" is not displayed when the switch is off, replace switch.
	Defective engine controller PWB.	When if the duplex paper conveying switch and feed switch 1 (above) are normal, replace engine controller PWB (see page 1-6-22).

1-5-2 Self-diagnosis

(1) Self-diagnostic function

This printer is equipped with a self-diagnostic function. When a problem is detected, printing is disabled. The problem is displayed as a code consisting of digits number followed by a number between 0110 and F080, indicating the nature of the problem. A message is also displayed requesting the user to call for service.

(2) Self diagnostic codes

Code	Contents	Remarks	
		Causes	Check procedures/corrective measures
0110	**Backup memory data problem** • Data in the specified area of the backup memory does not match the specified values.	Problem with the backup memory data.	Turn power switch off and back on .
		Defective backup RAM (U4) of engine controller PWB.	If the 0110 is displayed after turn power switch off and back on, replace the engine controller PWB.
0210	**Operator panel PWB communication problem** • There is no reply after 20 retries at communication.	Poor contact in the connector terminals.	Check the connection of connectors CN21 on the engine controller PWB and CN1 on the operator panel PWB, and the continuity across the connector terminals. Repair or replace if necessary.
		Defective engine controller PWB or operator panel PWB.	Replace the engine controller PWB or operator panel PWB and check for correct operation.
0420	**Paper feeder PF-70*/PF-75* communication problem** • Communication errors from the communication microcomputer on the engine controller PWB. No communication: there is no reply after 3 retries. Abnormal communication: a communication error (parity or checksum error) is detected five times in succession.	Poor contact in the connector terminals.	Check the connection of connectors CN3 on the engine controller PWB and the connector on the paper feeder main board, and the continuity across the connector terminals. Repair or replace if necessary.
		Defective engine controller PWB.	Replace the engine controller PWB and check for correct operation.
		Defective paper feeder main board.	Replace the paper feeder main board and check for correct operation.
0440	**Finisher* communication problem** • Communication errors from the communication microcomputer on the engine controller PWB. No communication: there is no reply after 3 retries. Abnormal communication: a communication error (parity or checksum error) is detected five times in succession.	Poor contact in the connector terminals.	Check the connection of connectors CN4, CN5 on the engine controller PWB and CN2 on the finisher main board, and the continuity across the connector terminals. Repair or replace if necessary.
		Defective engine controller PWB.	Replace the engine controller PWB and check for correct operation.
		Defective finisher main board.	Replace the finisher main board and check for correct operation.
0470	**Switchback unit* communication problem** • Communication errors from the communication microcomputer on the engine controller PWB. No communication: there is no reply after 3 retries. Abnormal communication: a communication error (parity or checksum error) is detected five times in succession.	Poor contact in the connector terminals.	Check the connection of connectors CN3 on the engine controller PWB and the continuity across the connector terminals. Repair or replace if necessary.
		Defective engine controller PWB.	Replace the engine controller PWB and check for correct operation.
		Defective switchback unit main board.	Replace the switchback unit main board and check for correct operation.

*: Optional

Code	Contents	Remarks	
		Causes	Check procedures/corrective measures
1010	**Upper lift motor problem** • When the upper cassette is inserted, the upper lift limit switch does not turn on within 6 s of the upper lift motor turning on and the upper lift limit switch does not turn on by turning off the upper lift motor for 200 ms and retrying twice. • During printing, the upper lift limit switch does not turn on within 200 ms of the upper lift motor turning on.	Broken gears or couplings of the upper lift motor.	Replace the upper lift motor.
		Defective upper lift motor.	Check for continuity across the coil. If none, replace the upper lift motor.
		Poor contact of the upper lift motor connector terminals.	Reinsert the connector. Also check for continuity within the connector cable. If none, repair or replace the cable.
		Defective upper lift limit switch.	Check if CN13-B9 on the engine controller PWB goes low when the upper lift limit switch is turned off. If not, replace the upper lift limit switch.
		Poor contact of the upper lift limit switch connector terminals.	Reinsert the connector. Also check for continuity within the connector cable. If none, repair or replace the cable.
1020	**Lower lift motor problem** • When the lower cassette is inserted, the lower lift limit switch does not turn on within 6 s of the lower lift motor turning on and the lower lift limit switch does not turn on by turning off the lower lift motor for 200 ms and retrying twice. • During printing, the lower lift limit switch does not turn on within 200 ms of the lower lift motor turning on.	Broken gears or couplings of the lower lift motor.	Replace the lower lift motor.
		Defective lower lift motor.	Check for continuity across the coil. If none, replace the lower lift motor.
		Poor contact of the lower lift motor connector terminals.	Reinsert the connector. Also check for continuity within the connector cable. If none, repair or replace the cable.
		Defective lower lift limit switch.	Check if CN13-B15 on the engine controller PWB goes low when the lower lift limit switch is turned off. If not, replace the lower lift limit switch.
		Poor contact of the lower lift limit switch connector terminals.	Reinsert the connector. Also check for continuity within the connector cable. If none, repair or replace the cable.
1030	**Desk upper lift motor problem** • When the upper cassette of the paper feeder PF-70* is inserted, the desk upper lift limit switch does not turn on within 6 s of the desk upper lift motor turning on and the desk upper lift limit switch does not turn on by turning off the desk upper lift motor for 200 ms and retrying twice. • During printing, the desk upper lift limit switch does not turn on within 200 ms of the desk upper lift motor turning on.	Broken gears or couplings of the desk upper lift motor.	Replace the desk upper lift motor.
		Defective desk upper lift motor.	Check for continuity across the coil. If none, replace the desk upper lift motor.
		Poor contact of the desk upper lift motor connector terminals.	Reinsert the connector. Also check for continuity within the connector cable. If none, repair or replace the cable.
		Defective desk upper lift limit switch.	Check if CN1-5 on the desk main board goes low when the desk upper lift limit switch is turned off. If not, replace the desk upper lift limit switch.

*: Optional

Code	Contents	Remarks	
		Causes	Check procedures/corrective measures
1030	**Desk upper lift motor problem** • When the upper cassette of the paper feeder PF-70* is inserted, the desk upper lift limit switch does not turn on within 6 s of the desk upper lift motor turning on and the desk upper lift limit switch does not turn on by turning off the desk upper lift motor for 200 ms and retrying twice. • During printing, the desk upper lift limit switch does not turn on within 200 ms of the desk upper lift motor turning on.	Poor contact of the desk upper lift limit switch connector terminals.	Reinsert the connector. Also check for continuity within the connector cable. If none, repair or replace the cable.
1040	**Desk lower lift motor problem** • When the lower cassette of the paper feeder PF-70* is inserted, the desk lower lift limit switch does not turn on within 6 s of the desk lower lift motor turning on and the desk lower lift limit switch does not turn on by turning off the desk lower lift motor for 200 ms and retrying twice. • During printing, the desk lower lift limit switch does not turn on within 200 ms of the desk lower lift motor turning on.	Broken gears of couplings of the desk lower lift motor.	Replace the desk lower lift motor.
		Defective desk lower lift motor.	Check for continuity across the coil. If none, replace the desk lower lift motor.
		Poor contact of the desk lower lift motor connector terminals.	Reinsert the connector. Also check for continuity within the connector cable. If none, repair or replace the cable.
		Defective desk lower lift limit switch.	Check if CN1-7 on the desk main board goes low when the desk lower lift limit switch is turned off. If not, replace the desk lower lift limit switch.
		Poor contact of the desk lower lift limit switch connector terminals.	Reinsert the connector. Also check for continuity within the connector cable. If none, repair or replace the cable.
1100	**Paper deck motor 1 of the paper feeder PF-75* problem** • A motor over-current signal is detected continuously for 1 s or longer.	Paper deck motor 1 does not rotate correctly (the motor is overloaded).	Check the gears and remedy if necessary.
		Paper deck motor 1 connector makes poor contact.	Reinsert the connector. Also check for continuity within the connector cable. If none, repair or replace the cable.
1110	**Paper deck motor 2* of the paper feeder PF-75* problem** • A motor over-current signal is detected continuously for 1 s or longer.	Paper deck motor 2 does not rotate correctly (the motor is overloaded).	Check the gears and remedy if necessary.
		Paper deck motor 2 connector makes poor contact.	Reinsert the connector. Also check for continuity within the connector cable. If none, repair or replace the cable.

*: Optional

Code	Contents	Remarks	
		Causes	Check procedures/corrective measures
1120	**Deck right lift of the paper feeder PF-75* position problem** • Deck level switch 2 does not turn on within 30 s of paper deck motor 2 turning on.	Defective deck level switch 2.	Check if CN5-4 on the desk main board goes low when desk level switch 2 is turned off. If not, replace desk level switch 2.
		Poor contact of deck level switch 2 connector terminals.	Reinsert the connector. Also check for continuity within the connector cable. If none, repair or replace the cable.
		Defective paper deck motor 2.	Check for continuity across the coil. If none, replace paper desk motor 2.
		Poor contact of paper deck motor 2 connector terminals.	Reinsert the connector. Also check for continuity within the connector cable. If none, repair or replace the cable.
		The deck right lift does not rise properly.	Check the gears and belts, and remedy if necessary.
1130	**Deck left lift of the paper feeder PF-75* position problem** • Deck level switch 1 does not turn on within 30 s of paper deck motor 1 turning on.	Defective deck level switch 1.	Check if CN5-7 on the desk main board goes low when desk level switch 1 is turned off. If not, replace desk level switch 1.
		Poor contact of deck level switch 1 connector terminals.	Reinsert the connector. Also check for continuity within the connector cable. If none, repair or replace the cable.
		Defective paper deck motor 1.	Check for continuity across the coil. If none, replace paper desk motor 1.
		Poor contact of paper deck motor 1 connector terminals.	Reinsert the connector. Also check for continuity within the connector cable. If none, repair or replace the cable.
		The deck left lift does not rise properly.	Check the gears and belts, and remedy if necessary.
1160	**Paper feeder PF-70*/PF-75* sequence problem**	Operation start request is sent from the printer to the paper feeder PF-70*/PF-75* while paper feed is disabled.	Turn the power off and back on (reset request is sent from the printer to the paper feeder PF-70*/PF-75* to cancel operation start request).
		Paper feed request is sent from the printer to the paper feeder PF-70*/PF-75* before operation start request.	Turn the power off and back on (reset request is sent from the printer to the paper feeder PF-70*/PF-75* to cancel operation start request).

*: Optional

Code	Contents	Remarks	
		Causes	Check procedures/corrective measures
1170	**Paper feeder PF-70*/PF-75* incorrect type problem**	Paper feeder for the copier is installed.	Replace the paper feeder for the printer.
2000	**Drive motor problem** • LOCK ALM signal remains high for 1 s, 1 s after the drive motor has turned on.	Poor contact in the drive motor connector terminals.	Reinsert the connector. Also check for continuity within the connector cable. If none, remedy or replace the cable.
		Defective drive motor rotation control circuit.	Replace the drive motor.
		Defective drive transmission system.	Check if the rollers and gears rotate smoothly. If not, grease the bushings and gears. Check for broken gears and replace if any.
		Defective engine controller PWB.	Replace the engine controller PWB (see page 1-6-22).
2500	**Paper feed motor problem** • LOCK ALM signal remains high for 1 s, 1 s after the paper feed motor has turned on.	Poor contact in the paper feed motor connector terminals.	Reinsert the connector. Also check for continuity within the connector cable. If none, remedy or replace the cable.
		Defective paper feed motor rotation control circuit.	Replace the paper feed motor.
		Defective drive transmission system.	Check if the rollers and gears rotate smoothly. If not, grease the bushings and gears. Check for broken gears and replace if any.
		Defective engine controller PWB.	Replace the engine controller PWB (see page 1-6-22).
2600	**Deck conveying motor of the paper feeder PF-75*/desk drive motor of the paper feeder PF-75* problem** • No pulse is input within 500 ms of the start-up. • No pulse is input within 100 ms of the previous pulse input.	Defective deck conveying motor board/desk drive motor board.	Replace the deck conveying motor board/ desk drive motor board and check for correct operation.
		Deck conveying motor /desk drive motor does not rotate correctly (the motor is overloaded).	Check the gears and remedy if necessary.
		Poor contact in the deck conveying motor/desk drive motor connector terminals.	Reinsert the connector. Also check for continuity within the connector cable. If none, remedy or replace the cable.

*: Optional

Code	Contents	Remarks	
		Causes	Check procedures/corrective measures
4000	**Polygon motor synchronization problem** • The polygon motor does not reach the stable speed within 15 s of the polygon motor remote signal turning on.	Poor contact in the polygon motor connector terminals.	Reinsert the connector. Also check for continuity within the connector cable. If none, remedy or replace the cable.
		Defective polygon motor.	Replace the LSU (see page 1-6-11).
		Defective power supply unit.	Check if 24 V DC is supplied to CN2-1 on the engine controller PWB. If not, replace the power supply unit.
		Defective power supply from engine controller PWB.	Check if 24 V DC is output from CN8-10 on the engine controller PWB. If not, replace the engine controller PWB.
		Defective engine controller PWB.	Replace the engine controller PWB (see page 1-6-22).
4010	**Polygon motor steady-state problem** • The polygon motor rotation is not stable for 600 ms after the polygon motor rotation has been stabilized.	Poor contact in the polygon motor connector terminals.	Reinsert the connector. Also check for continuity within the connector cable. If none, remedy or replace the cable.
		Defective polygon motor.	Replace the LSU (see page 1-6-11).
		Defective power supply unit.	Check if 24 V DC is supplied to CN2-1 on the engine controller PWB. If not, replace the power supply unit.
		Defective power supply from engine controller PWB.	Check if 24 V DC is output from CN8-10 on the engine controller PWB. If not, replace the engine controller PWB.
		Defective engine controller PWB.	Replace the engine controller PWB (see page 1-6-22).
4200	**BD steady-state problem** • The VTC (Video Timing Controller) detects a BD error for 600 ms after the polygon motor rotation has been stabilized.	Defective laser diode.	Replace the LSU (see page 1-6-11).
		Defective polygon motor.	Replace the LSU (see page 1-6-11).
		Defective engine controller PWB.	Replace the engine controller PWB and check for correct operation.
5300	**Broken cleaning lamp wire** While the cleaning lamp is on, the broken cleaning lamp wire detection signal is detected for 2 s continuously.	Defective cleaning lamp.	Replace the cleaning lamp.
		Defective engine controller PWB.	Replace the engine controller PWB and check for correct operation.
6000	**Broken fuser heater wire** • The fuser temperature does not increase for 40 s after the fuser heaters have been turned on for warming up. • The fuser temperature remains below 50 °C/122 °F for 10 s continuously after the fuser heaters have been turned on during stabilization.	Poor contact in the fuser unit thermistor connector terminals.	Check the connection of connector CN10 on the engine controller PWB and the continuity across the connector terminals. Repair or replace if necessary.
		Fuser unit thermistor installed incorrectly.	Check and reinstall if necessary.
		Fuser unit thermostat triggered.	Check for continuity. If none, replace the fuser unit thermostat.
		Fuser unit heater M or S installed incorrectly.	Check and reinstall if necessary.

Code	Contents	Remarks	
		Causes	Check procedures/corrective measures
6000	**Broken fuser heater wire** • The fuser temperature does not increase for 40 s after the fuser heaters have been turned on for warming up. • The fuser temperature remains below 50 °C/122 °F for 10 s continuously after the fuser heaters have been turned on during stabilization.	Broken fuser unit heater M or S wire.	Check for continuity. If none, replace the fuser unit heater M or S (see page 1-6-20).
6020	**Abnormally high fuser unit thermistor temperature** • The fuser temperature exceeds 230 °C/446 °F for 10 s.	Shorted fuser unit thermistor.	Measure the resistance. If it is 0 Ω, replace the fuser unit thermistor (see page 1-6-22).
		Broken fuser unit heater control circuit on the power supply unit.	Replace the power supply unit.
6050	**Abnormally low fuser unit thermistor temperature** • The fuser temperature remains below 120 °C/248 °F for 10 s. • When power is turned on, the fuser temperature does not reach 40 °C/104 °F even if 14 (FS-9100DN) or 20 (FS-9500DN) seconds elapse.	Poor contact in the fuser unit thermistor connector terminals.	Check the connection of connector CN10 on the engine controller PWB and the continuity across the connector terminals. Repair or replace if necessary.
		Broken fuser unit thermistor wire.	Measure the resistance. If it is ∞ Ω, replace the fuser unit thermistor (see page 1-6-22).
		Fuser unit thermistor installed incorrectly.	Check and reinstall if necessary.
		Fuser unit thermostat triggered.	Check for continuity. If none, replace the fuser unit thermostat (see page 1-6-22).
		Fuser unit heater M or S installed incorrectly.	Check and reinstall if necessary.
		Broken fuser unit heater M or S wire.	Check for continuity. If none, replace the fuser unit heater M or S (see page 1-6-20).
6410	**Fuser unit connector insertion problem** • Absence of the fuser unit is detected continuously for 1500 ms while there is no error on the printer.	Fuser unit connector inserted incorrectly.	Reinsert the fuser unit connector if necessary.
		Defective fuser unit connector.	Replace the fuser unit.
6420	**Broken fuser unit thermistor wire** • The fuser temperature remains at 0 °C/32 °F for 30 s continuously when the fuser heater is on.	Poor contact in the fuser unit thermistor connector terminals.	Check the connection of connector CN10 on the engine controller PWB and the continuity across the connector terminals. Repair or replace if necessary.
		Broken fuser unit thermistor wire.	Measure the resistance. If it is ∞ Ω, replace the fuser unit thermistor.
7400	**Developing unit connector insertion problem** • Absence of the developing unit is detected continuously for 1500 ms while there is no error on the printer.	Developing unit connector inserted incorrectly.	Reinsert the developing unit connector if necessary.
		Defective developing unit connector.	Replace the developing unit.

Code	Contents	Remarks	
		Causes	Check procedures/corrective measures
7410	**Drum unit connector insertion problem** • Absence of the drum unit is detected continuously for 1500 ms while there is no error on the printer.	Drum unit connector inserted incorrectly.	Reinsert the drum unit connector if necessary.
		Defective drum unit connector.	Replace the drum unit.
7800	**Broken external temperature thermistor wire** • The input voltage is above 4.5 V.	Poor contact in the humidity sensor board connector terminals.	Reinsert the connector. Also check for continuity within the connector cable. If none, remedy or replace the cable.
		Defective external temperature thermistor.	Replace the humidity sensor board.
7810	**Short-circuited external temperature thermistor** • The input voltage is below 0.5 V.	Poor contact in the humidity sensor board connector terminals.	Reinsert the connector. Also check for continuity within the connector cable. If none, remedy or replace the cable.
		Defective external temperature thermistor.	Replace the humidity sensor board.
8010	**Finisher* paper conveying motor problem** • The paper conveying motor lockup signal is detected for 0.5 s or longer.	Poor contact in the paper conveying motor connector terminals.	Reinsert the connector. Also check for continuity within the connector cable. If none, remedy or replace the cable.
		The paper conveying motor malfunctions.	Replace the paper conveying motor and check for correct operation.
		Defective finisher main board.	Replace the finisher main board and check for correct operation.
8030	**Finisher* paper conveying belt problem** • An on-to-off or off-to-on state change of the paper conveying belt home position sensor is not detected within 2 s of the paper conveying belt clutch turning on.	The paper conveying belt is out of phase.	Adjust the paper conveying belt so that it is in phase and check for correct operation.
		The paper conveying belt clutch malfunctions.	Replace the paper conveying belt clutch and check for correct operation.
		The paper conveying belt home position sensor malfunctions.	Replace the paper conveying belt home position sensor and check for correct operation.
		The paper conveying belt home position sensor connector makes poor contact.	Reinsert the connector. Also check for continuity within the connector cable. If none, remedy or replace the cable.
		The internal tray is incorrectly inserted.	Check whether the internal tray unit or front cover catches are damaged.

*: Optional

Code	Contents	Remarks	
		Causes	Check procedures/corrective measures
8140	**Finisher* tray elevation motor problem** • The sort tray is not detected in the home position within 30 s of the start of the tray elevation motor rotation.	Poor contact in the tray elevation motor connector terminals.	Reinsert the connector. Also check for continuity within the connector cable. If none, remedy or replace the cable.
		The tray elevation motor malfunctions.	Replace the tray elevation motor and check for correct operation.
		Defective finisher main board.	Replace the finisher main board and check for correct operation.
8170	**Finisher* front side registration motor problem** • If the front side registration home position sensor is on in initialization, the sensor does not turn off within 570 ms of starting initialization. • If the front side registration home position sensor is off in initialization, the sensor does not turn on within 3180 ms of starting initialization.	The front side registration motor connector makes poor contact.	Reinsert the connector. Also check for continuity within the connector cable. If none, remedy or replace the cable.
		The front side registration motor malfunctions.	Replace the front side registration motor and check for correct operation.
		The front side registration home position sensor connector makes poor contact.	Reinsert the connector. Also check for continuity within the connector cable. If none, remedy or replace the cable.
		The front side registration home position sensor malfunctions.	Replace the front side registration home position sensor and check for correct operation.
		Defective finisher main board.	Replace the finisher main board and check for correct operation.
8180	**Finisher* rear side registration motor problem** • If the rear side registration home position sensor is on in initialization, the sensor does not turn off within 570 ms of starting initialization. • If the rear side registration home position sensor is off in initialization, the sensor does not turn on within 2880 ms of starting initialization.	The rear side registration motor connector makes poor contact.	Reinsert the connector. Also check for continuity within the connector cable. If none, remedy or replace the cable.
		The rear side registration motor malfunctions.	Replace the rear side registration motor and check for correct operation.
		The rear side registration home position sensor connector makes poor contact.	Reinsert the connector. Also check for continuity within the connector cable. If none, remedy or replace the cable.
		The rear side registration home position sensor malfunctions.	Replace the rear side registration home position sensor and check for correct operation.
		Defective finisher main board.	Replace the finisher main board and check for correct operation.

*: Optional

Code	Contents	Remarks	
		Causes	Check procedures/corrective measures
8190	**Finisher* trailing edge registration motor problem** • If the trailing edge registration home position sensor is on in initialization, the sensor does not turn off within 570 ms of starting initialization. • If the trailing edge registration home position sensor is off in initialization, the sensor does not turn on within 4550 ms of starting initialization.	The trailing edge registration motor connector makes poor contact.	Reinsert the connector. Also check for continuity within the connector cable. If none, remedy or replace the cable.
		The trailing edge registration motor malfunctions.	Replace the trailing edge registration motor and check for correct operation.
		The trailing edge registration home position sensor connector makes poor contact.	Reinsert the connector. Also check for continuity within the connector cable. If none, remedy or replace the cable.
		The trailing edge registration home position sensor malfunctions.	Replace the trailing edge registration home position sensor and check for correct operation.
		Defective finisher main board.	Replace the finisher main board and check for correct operation.
8210	**Finisher* front stapler problem** • The front stapler home position sensor does not change state from non-detection to detection within 200 ms of the start of front stapler motor counterclockwise (forward) rotation. • During initialization, the front stapler home position sensor does not change state from non-detection to detection within 600 ms of the start of front stapler motor clockwise (reverse) rotation.	The front stapler connector makes poor contact.	Reinsert the connector. Also check for continuity within the connector cable. If none, remedy or replace the cable.
		The front stapler malfunctions. a) The front stapler is blocked with a staple. b) The front stapler is broken.	a) Remove the front stapler cartridge, and check the cartridge and the stapling section of the stapler. b) Replace the front stapler and check for correct operation.
		Defective finisher main board.	Replace the finisher main board and check for correct operation.
8220	**Finisher* rear stapler problem** • The rear stapler home position sensor does not change state from non-detection to detection within 200 ms of the start of rear stapler motor counterclockwise (forward) rotation. • During initialization, the rear stapler home position sensor does not change state from non-detection to detection within 600 ms of the start of rear stapler motor clockwise (reverse) rotation.	The rear stapler connector makes poor contact.	Reinsert the connector. Also check for continuity within the connector cable. If none, remedy or replace the cable.
		The rear stapler malfunctions. a) The rear stapler is blocked with a staple. b) The rear stapler is broken.	a) Remove the front stapler cartridge, and check the cartridge and the stapling section of the stapler. b) Replace the front stapler and check for correct operation.
		Defective finisher main PCB.	Replace the finisher main PCB and check for correct operation.
8300	**Booklet stitcher* paper ejection motor problem**	A problem is detected with the paper ejection motor.	See the booklet stitcher service manual.
8310	**Booklet stitcher* elevation motor problem**	A problem is detected with the elevation motor.	See the booklet stitcher service manual.

*: Optional

Code	Contents	Remarks	
		Causes	Check procedures/corrective measures
8320	**Booklet stitcher* rear jog motor problem**	A problem is detected with the rear jog motor.	See the booklet stitcher service manual.
8330	**Booklet stitcher* front jog motor problem**	A problem is detected with the front jog motor.	See the booklet stitcher service manual.
8340	**Booklet stitcher* staple motor problem**	A problem is detected with the staple motor.	See the booklet stitcher service manual.
8350	**Booklet stitcher* batch processing motor problem**	A problem is detected with the batch processing motor.	See the booklet stitcher service manual.
8360	**Booklet stitcher* stapler shift motor problem**	A problem is detected with the stapler shift motor.	See the booklet stitcher service manual.
8370	**Booklet stitcher* paddle motor problem**	A problem is detected with the paddle motor.	See the booklet stitcher service manual.
8380	**Booklet stitcher* folding problem**	A problem is detected with the folding sensor.	See the booklet stitcher service manual.
8390	**Booklet stitcher* backup RAM data problem**	A backup RAM data error is detected.	See the booklet stitcher service manual.
8400	**Booklet stitcher* incorrect type problem**	An incorrect type error is detected.	See the booklet stitcher service manual.
8410	**Booklet stitcher* punch motor problem**	A problem is detected with the punch motor.	See the booklet stitcher service manual.
8420	**Booklet stitcher* shift motor problem**	A problem is detected with the shift motor.	See the booklet stitcher service manual.
8430	**Booklet stitcher* punch communication problem**	A problem is detected with the punch communication.	See the booklet stitcher service manual.
8440	**Booklet stitcher* punch sensor problem**	A problem is detected with the punch sensor.	See the booklet stitcher service manual.
8450	**Booklet stitcher* side punch sensor problem**	A problem is detected with the side punch sensor.	See the booklet stitcher service manual.

*: Optional

Code	Contents	Remarks	
		Causes	Check procedures/corrective measures
8460	**Booklet stitcher* punch backup RAM data problem**	A problem is detected with the punch backup RAM data.	See the booklet stitcher service manual.
8470	**Booklet stitcher* punch dust sensor problem**	A problem is detected with the punch dust sensor.	See the booklet stitcher service manual.
8480	**Booklet stitcher* broken punch power source wire problem**	A broken punch power source wire problem is detected.	See the booklet stitcher service manual.
F0	**Main controller PWB error** • The operation breakdown occurs between main controller PWB and operation panel PWB during 30 seconds.	Defective main controller PWB.	Replace the main controller PWB. See page 1-6-23.
		Defective operator panel PWB.	Replace the operator panel PWB. See page 1-6-27.
		Defective engine controller PWB .	Replace the engine controller PWB. See page 1-6-24.
		Defective harness between engine controller PWB and operator panel PWB, or poor contact of the connector terminals.	Check the continuity of the harness. Check the insertion of connectors.
F010	**System DIMM checksum error** • Checksum for the system DIMM PWB that holds the system program is wrong.	Defective system DIMM PWB.	Replace the system DIMM PWB.
		Defective main controller PWB.	Replace the main controller PWB. See page 1-6-23.
F020	**Memory check error** • Access to the expanding memory (DIMM) or RAM on the main controller PWB is unobtainable.	Defective main controller PWB.	Replace the main controller PWB. See page 1-6-23.
		Defective expansion memory (DIMM).	Replace the expansion memory (DIMM).
F030	**Main controller PWB system error** • The error concerned with the system occurred except self diagnostic codes F0 (F010) conditions.	Defective main controller PWB.	Replace the main controller PWB. See page 1-6-23.
F040	**Main - Engine controller PWBs communication error** • The communication breakdown occurred between main controller PWB and engine controller PWB during 30 seconds.	Defective engine controller PWB.	Replace the engine controller PWB. See page 1-6-24.
		Defective main controller PWB.	Replace the main controller PWB. See page 1-6-23.

*: Optional

Code	Contents	Remarks	
		Causes	Check procedures/corrective measures
F080	**Flash ROM checksum error** • Check result is not correct about flash ROM checksum of engine controller PWB.	Defective engine controller PWB.	Replace the engine controller PWB. See page 1-6-24.

*: Optional

1-5-3 Image formation problems

(1) No image appears (entirely white).

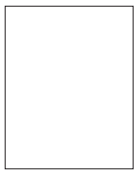

See page 1-5-36

(2) No image appears (entirely black).

See page 1-5-36

(3) Image is too light.

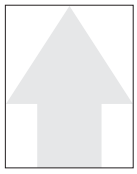

See page 1-5-37

(4) Background is visible.

See page 1-5-37

(5) A white line appears longitudinally.

See page 1-5-37

(6) A black line appears longitudinally.

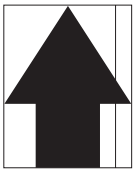

See page 1-5-38

(7) A black line appears laterally.

See page 1-5-38

(8) One side of the print image is darker than the other.

See page 1-5-38

(9) Black dots appear on the image.

See page 1-5-39

(10) Image is blurred.

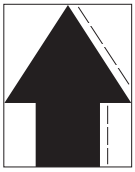

See page 1-5-39

(11) The leading edge of the image is misaligned with the original image.

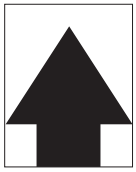

See page 1-5-39

(12) Paper creases.

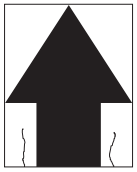

See page 1-5-40

(13) Offset occurs.

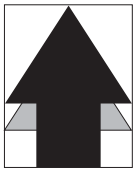

See page 1-5-40

(14) Image is partly missing.

See page 1-5-41

(15) Fusing is poor.

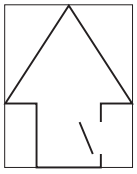

See page 1-5-41

(16) Image is out of focus.

See page 1-5-41

(17) Image is not square.

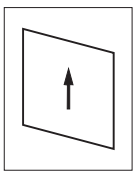

See page 1-5-41

(1) No image appears (entirely white).

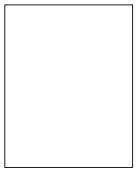

Causes
1. No transfer charging.
2. No laser beam output.
3. No developing bias is output.

Causes	Check procedures/corrective measures
1. No transfer charging.	
A. The connector terminals of the high-voltage transformer PWB make poor contact.	Reinsert the connector. Also check for continuity within the connector cable. If none, remedy or replace the cable.
B. Defective engine controller PWB.	Replace the engine controller PWB (see page 1-6-24).
C. Defective high-voltage transformer PWB.	Replace the high-voltage transformer unit (see page 1-6-26).
2. No laser beam output.	
A. Defective laser scanner unit.	Replace the laser scanner unit (see page 1-6-11).
B. Defective engine controller PWB.	Replace the engine controller PWB (see page 1-6-24).
C. Defective main controller PWB.	Replace the main controller PWB (see page 1-6-21).
3. No developing bias is output.	
A. Defective engine controller PWB.	Replace the engine controller PWB (see page 1-6-24).
B. Defective high-voltage transformer PWB.	Replace the high-voltage transformer unit (see page 1-6-26).

(2) No image appears (entirely black).

Causes
1. No main charging.
2. Video data problem.

Causes	Check procedures/corrective measures
1. No main charging.	
A. Broken main charger wire.	Replace the main charger unit.
B. Leaking main charger housing.	Clean the main charger wire, grid and shield.
C. The connector terminals of the high-voltage transformer PWB make poor contact.	Reinsert the connector. Also check for continuity within the connector cable. If none, remedy or replace the cable.
D. Defective engine controller PWB.	Replace the engine controller PWB (see page 1-6-24).
E. Defective high-voltage transformer PWB.	Replace the high-voltage transformer unit (see page 1-6-26).
2. Video data problem.	
A. Defective main controller PWB.	Replace the main controller PWB (see page 1-6-21).

(3) Image is too light.

Causes
1. Insufficient toner.
2. Deteriorated toner.
3. The transfer voltage is not output properly.
4. Dirty main charger wire.
5. EcoPrint mode enabled.

Causes	Check procedures/corrective measures
1. Insufficient toner.	If the display shows the message requesting toner replenishment, replace the cartridge.
2. Deteriorated toner.	Perform the drum refresh operation.
3. The transfer voltage is not output properly.	Clean or check the transfer roller.
4. Dirty main charger wire.	Clean the main charger or, if it is extremely dirty, replace it.
5. EcoPrint mode enabled.	Disable EcoPrint mode (Refer to the operation guide).

(4) Background is visible.

Causes
1. Deteriorated toner.
2. Dirty main charger wire.

Causes	Check procedures/corrective measures
1. Deteriorated toner.	Perform the drum refresh operation.
2. Dirty main charger wire.	Clean the wire or, if it is extremely dirty, replace it.

(5) A white line appears longitudinally.

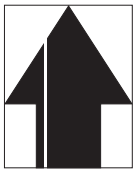

Causes
1. Foreign matter in the developing unit.
2. Defective laser beam output.

Causes	Check procedures/corrective measures
1. Foreign matter in the developing unit.	Check if the magnetic brush is formed uniformly. Replace the developing unit if any foreign matter.
2. Defective laser beam output.	
A. Defective laser scanner unit.	Replace the laser scanner unit (see page 1-6-11).
B. Defective engine controller PWB.	Replace the engine controller PWB (see page 1-6-24).

(6) A black line appears longitudinally.

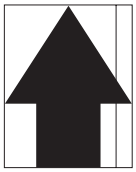

Causes
1. Dirty or flawed drum.
2. Deformed or worn cleaning blade.
3. Dirty main charger wire.

Causes	Check procedures/corrective measures
1. Dirty or flawed drum.	Perform the drum refresh operation. If the drum is flawed, replace the drum unit.
2. Deformed or worn cleaning blade.	Replace the drum unit (see page 1-6-14).
3. Dirty main charger wire.	Clean the main charger wire or, if it is extremely dirty, replace it.

(7) A black line appears laterally.

Causes
1. Flawed drum.
2. Dirty developing section.
3. Leaking main charger housing.
4. Leaking separation electrode.

Causes	Check procedures/corrective measures
1. Flawed drum.	Replace the drum unit.
2. Dirty developing section.	Clean any part contaminated with toner in the developing section.
3. Leaking main charger housing.	Clean the main charger wire, grid and shield.
4. Leaking separation electrode.	Clean the separation electrode.

(8) One side of the copy image is darker than the other.

Causes
1. Dirty main charger wire.

Causes	Check procedures/corrective measures
1. Dirty main charger wire.	Clean the wire or, if it is extremely dirty, replace it.

(9) Black dots appear on the image.

Causes
1. Dirty or flawed drum.
2. Deformed or worn cleaning blade.
3. Dirty drum separation claws.
4. Dirty heat roller separation claws.

Causes	Check procedures/corrective measures
1. Dirty or flawed drum.	Perform the drum refresh operation. If the drum is flawed, replace the drum unit.
2. Deformed or worn cleaning blade.	Replace the drum unit (see page 1-6-14).
3. Dirty drum separation claws.	Clean the drum separation claws.
4. Dirty the heat roller separation claws.	Clean the heat roller separation claws.

(10) Image is blurred.

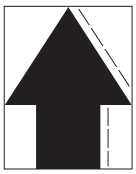

Causes
1. Deformed press roller.
2. Paper conveying section drive problem.

Causes	Check procedures/corrective measures
1. Deformed press roller.	Replace the press roller (see page 1-6-18).
2. Paper conveying section drive problem.	Check the gears and belts and, if necessary, grease them.

(11) The leading edge of the image is misaligned with the original image.

Causes
1. Feed clutch, paper feed clutch, MP paper feed clutch or registration clutch installed or operating incorrectly.
2. Defective engine controller PWB.

Causes	Check procedures/corrective measures
1. Feed clutch, paper feed clutch, MP paper feed clutch or registration clutch installed or operating incorrectly.	Check the installation position and operation of the feed clutch, paper feed clutch, MP paper feed clutch and registration clutch. If any of them operates incorrectly, replace it.
2. Defective engine controller PWB.	Replace the engine controller PWB (see page 1-6-24).

(12) Paper creases.

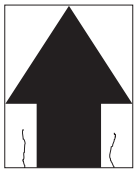

Causes
1. Paper curled.
2. Paper damp.
3. Defective pressure springs.
4. Defective separation.
5. Defective fans.

Causes	Check procedures/corrective measures
1. Paper curled.	Check the paper storage conditions.
2. Paper damp.	Check the paper storage conditions.
3. Defective pressure springs.	Replace the pressure springs.
4. Defective separation.	Check the drum separation claws and heat roller separation claws.
5. Defective fans.	Replace the fans.

(13) Offset occurs.

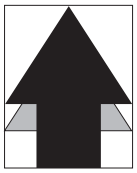

Causes
1. Defective cleaning blade.
2. Defective fuser section.

Causes	Check procedures/corrective measures
1. Defective cleaning blade.	Replace the drum unit (see page 1-6-14).
2. Defective fuser section.	Replace the heat roller and press roller (see page 1-6-16 and 19).

(14) Image is partly missing.

Causes
1. Paper damp.
2. Paper creased.
3. Drum condensation.
4. Flawed drum.

Causes	Check procedures/corrective measures
1. Paper damp.	Check the paper storage conditions.
2. Paper creased.	Replace the paper.
3. Drum condensation.	Perform the drum refresh operation.
4. Flawed drum.	Perform the drum refresh operation. If the drum is flawed, replace the drum unit.

(15) Fusing is poor.

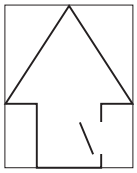

Causes
1. Wrong type of paper.
2. Defective pressure springs.
3. Flawed press roller.
4. Defective fuser heater S.

Causes	Check procedures/corrective measures
1. Wrong paper.	Check if the paper meets specifications. Replace paper.
2. Defective pressure springs.	Replace the pressure springs.
3. Flawed press roller.	Replace the press roller (see page 1-6-19).
4. Defective fuser heater S.	Replace the fuser heater S (see page 1-6-20).

(16) Image is out of focus.

Causes
1. Drum condensation.

Causes	Check procedures/corrective measures
1. Drum condensation.	Perform the drum refresh operation.

(17) Image is not square.

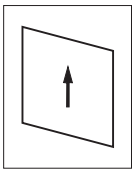

Causes
1. Laser scanner unit positioned incorrectly.

Causes	Check procedures/corrective measures
1. Laser scanner unit positioned incorrectly.	Adjust the installation position of the laser scanner unit (see page 1-6-13).

1-5-4 Electrical problems

Problem	Causes	Check procedures/corrective measures
(1) The machine does not operate when the power switch is turned on.	No electricity at the power outlet.	Measure the input voltage.
	The power cord is not plugged in properly.	Check the contact between the power plug and the outlet.
	The front cover, conveying cover and/or side cover are/is not closed completely.	Check the front cover, conveying cover and side cover.
	Broken power cord.	Check for continuity. If none, replace the cord.
	Defective power switch.	Check for continuity across the contacts. If none, replace the power switch.
	Blown fuse in the power supply unit.	Check for continuity. If none, remove the cause of blowing and replace the fuse.
	Defective safety switch 1 or 2.	Check for continuity across the contacts of each switch. If none, replace the switch.
	Defective power supply unit.	With AC present, check for 24 V DC at CN1-1 and 5 V DC at CN1-5 on the power supply unit. If none, replace the power supply unit.
(2) The drive motor does not operate (C2000).	Poor contact in the drive motor connector terminals.	Reinsert the connector. Also check for continuity within the connector cable. If none, remedy or replace the cable.
	Broken drive motor gear.	Check visually and replace the drive motor if necessary.
	Defective drive motor.	Run maintenance item U030 and check if the drive motor operates when CN11-9 on the engine controller PWB goes low. If not, replace the drive motor.
	Defective engine controller PWB.	Run maintenance item U030 and check if CN11-9 on the engine controller PWB goes low. If not, replace the engine controller PWB.
(3) The paper feed motor does not operate (C2500).	Poor contact in the paper feed motor connector terminals.	Reinsert the connector. Also check for continuity within the connector cable. If none, remedy or replace the cable.
	Broken paper feed motor gear.	Check visually and replace the paper feed motor if necessary.
	Defective paper feed motor.	Run maintenance item U030 and check if the paper feed motor operates when CN11-10 on the engine controller PWB goes low. If not, replace the paper feed motor.
	Defective engine controller PWB.	Run maintenance item U030 and check if CN11-10 on the engine controller PWB goes low. If not, replace the engine controller PWB.
(4) The eject motor does not operate.	Poor contact in the eject motor connector terminals.	Reinsert the connector. Also check for continuity within the connector cable. If none, remedy or replace the cable.
	Broken eject motor gear.	Check visually and replace the eject motor if necessary.
	Defective eject motor.	Run maintenance item U030 and check if the eject motor operates when CN16-B11, CN16-B12, CN16-B13 and CN16-B14 on the engine controller PWB go low. If not, replace the eject motor.

Problem	Causes	Check procedures/corrective measures
(4) The eject motor does not operate.	Defective eject switch.	Run maintenance item U031 and turn the eject switch on and off manually. If "1" is not displayed when the switch is on or "0" is not displayed when the switch is off, replace eject switch.
	Defective engine controller PWB.	Run maintenance item U030 and check if CN16-B11, CN16-B12, CN16-B13 and CN16-B14 on the engine controller PWB go low. If not, replace the engine controller PWB.
(5) The upper lift motor does not operate (C1010).	Broken upper lift motor coil.	Check for continuity across the coil. If none, replace the upper lift motor.
	Poor contact in the upper lift motor connector terminals.	Reinsert the connector. Also check for continuity within the connector cable. If none, remedy or replace the cable.
	Defective engine controller PWB.	Check if 24 V DC is output across CN13-A17 on the engine controller PWB right after the upper cassette is installed. If not, replace the engine controller PWB.
(6) The lower lift motor does not operate (C1020).	Broken lower lift motor coil.	Check for continuity across the coil. If none, replace the lower lift motor.
	Poor contact in the lower lift motor connector terminals.	Reinsert the connector. Also check for continuity within the connector cable. If none, remedy or replace the cable.
	Defective engine controller PWB.	Check if 24 V DC is output across CN13-B7 on the engine controller PWB right after the lower cassette is installed. If not, replace the engine controller PWB.
(7) Cooling fan motor 1 does not operate.	Broken cooling fan motor 1 coil.	Check for continuity across the coil. If none, replace cooling fan motor 1.
	Poor contact in the cooling fan motor 1 connector terminals.	Reinsert the connector. Also check for continuity within the connector cable. If none, repair or replace the cable.
(8) Cooling fan motor 2 does not operate.	Broken cooling fan motor 2 coil.	Check for continuity across the coil. If none, replace cooling fan motor 2.
	Poor contact in the cooling fan motor 2 connector terminals.	Reinsert the connector. Also check for continuity within the connector cable. If none, repair or replace the cable.
(9) Cooling fan motor 3 does not operate.	Broken cooling fan motor 3 coil.	Check for continuity across the coil. If none, replace cooling fan motor 3.
	Poor contact in the cooling fan motor 3 connector terminals.	Reinsert the connector. Also check for continuity within the connector cable. If none, repair or replace the cable.
(10) Cooling fan motor 4 does not operate.	Broken cooling fan motor 4 coil.	Check for continuity across the coil. If none, replace cooling fan motor 4.
	Poor contact in the cooling fan motor 4 connector terminals.	Reinsert the connector. Also check for continuity within the connector cable. If none, repair or replace the cable.
(11) Cooling fan motor 5 does not operate.	Broken cooling fan motor 5 coil.	Check for continuity across the coil. If none, replace cooling fan motor 5.
	Poor contact in the cooling fan motor 5 connector terminals.	Reinsert the connector. Also check for continuity within the connector cable. If none, repair or replace the cable.

Problem	Causes	Check procedures/corrective measures
(12) Cooling fan motor 6 does not operate.	Broken cooling fan motor 6 coil.	Check for continuity across the coil. If none, replace cooling fan motor 6.
	Poor contact in the cooling fan motor 6 connector terminals.	Reinsert the connector. Also check for continuity within the connector cable. If none, repair or replace the cable.
(13) Cooling fan motor 7 does not operate.	Broken cooling fan motor 7 coil.	Check for continuity across the coil. If none, replace cooling fan motor 7.
	Poor contact in the cooling fan motor 7 connector terminals.	Reinsert the connector. Also check for continuity within the connector cable. If none, repair or replace the cable.
(14) Cooling fan motor 8 does not operate.	Broken cooling fan motor 8 coil.	Check for continuity across the coil. If none, replace cooling fan motor 8.
	Poor contact in the cooling fan motor 8 connector terminals.	Reinsert the connector. Also check for continuity within the connector cable. If none, repair or replace the cable.
(15) The upper paper feed clutch does not operate.	Broken upper paper feed clutch coil.	Check for continuity across the coil. If none, replace the upper paper feed clutch.
	Poor contact in the upper paper feed clutch connector terminals.	Reinsert the connector. Also check for continuity within the connector cable. If none, remedy or replace the cable.
	Defective engine controller PWB.	Run maintenance item U032 and check if CN16-B1 on the engine controller PWB goes low. If not, replace the engine controller PWB.
(16) The lower paper feed clutch does not operate.	Broken lower paper feed clutch coil.	Check for continuity across the coil. If none, replace the lower paper feed clutch.
	Poor contact in the lower paper feed clutch connector terminals.	Reinsert the connector. Also check for continuity within the connector cable. If none, remedy or replace the cable.
	Defective engine controller PWB.	Run maintenance item U032 and check if CN16-B4 on the engine controller PWB goes low. If not, replace the engine controller PWB.
(17) Feed clutch 1 does not operate.	Broken feed clutch 1 coil.	Check for continuity across the coil. If none, replace feed clutch 1.
	Poor contact in feed clutch 1 connector terminals.	Reinsert the connector. Also check for continuity within the connector cable. If none, remedy or replace the cable.
	Defective engine controller PWB.	Run maintenance item U032 and check if CN11-14 on the engine controller PWB goes low. If not, replace the engine controller PWB.
(18) Feed clutch 2 does not operate.	Broken feed clutch 2 coil.	Check for continuity across the coil. If none, replace feed clutch 2.
	Poor contact in feed clutch 2 connector terminals.	Reinsert the connector. Also check for continuity within the connector cable. If none, remedy or replace the cable.
	Defective engine controller PWB.	Run maintenance item U032 and check if CN13-A12 on the engine controller PWB goes low. If not, replace the engine controller PWB.

Problem	Causes	Check procedures/corrective measures
(19) Feed clutch 3 does not operate.	Broken feed clutch 3 coil.	Check for continuity across the coil. If none, replace feed clutch 3.
	Poor contact in feed clutch 3 connector terminals.	Reinsert the connector. Also check for continuity within the connector cable. If none, remedy or replace the cable.
	Defective engine controller PWB.	Run maintenance item U032 and check if CN13-A5 on the engine controller PWB goes low. If not, replace the engine controller PWB.
(20) The MP paper feed clutch does not operate.	Broken MP paper feed clutch coil.	Check for continuity across the coil. If none, replace the MP paper feed clutch.
	Poor contact in the MP paper feed clutch connector terminals.	Reinsert the connector. Also check for continuity within the connector cable. If none, remedy or replace the cable.
	Defective engine controller PWB.	Run maintenance item U032 and check if CN6-A9 on the engine controller PWB goes low. If not, replace the engine controller PWB.
(21) The MP feed clutch does not operate.	Broken MP feed clutch coil.	Check for continuity across the coil. If none, replace the MP feed clutch.
	Poor contact in the MP feed clutch connector terminals.	Reinsert the connector. Also check for continuity within the connector cable. If none, remedy or replace the cable.
	Defective engine controller PWB.	Run maintenance item U032 and check if CN6-A11 on the engine controller PWB goes low. If not, replace the engine controller PWB.
(22) The registration clutch does not operate.	Broken registration clutch coil.	Check for continuity across the coil. If none, replace the registration clutch.
	Poor contact in the registration clutch connector terminals.	Reinsert the connector. Also check for continuity within the connector cable. If none, remedy or replace the cable.
	Defective engine controller PWB.	Run maintenance item U032 and check if CN10-A2 on the engine controller PWB goes low. If not, replace the engine controller PWB.
(23) The feedshift solenoid does not operate.	Broken feedshift solenoid coil.	Check for continuity across the coil. If none, replace the feedshift solenoid.
	Poor contact in the feedshift solenoid connector terminals.	Reinsert the connector. Also check for continuity within the connector cable. If none, remedy or replace the cable.
	Defective engine controller PWB.	If the feedshift solenoid turns on when CN16-A1 and CN16-A2 on the engine controller PWB go low. If not, replace the engine controller PWB.
(24) The toner feed solenoid does not operate.	Broken toner feed solenoid coil.	Check for continuity across the coil. If none, replace the toner feed solenoid.
	Poor contact in the toner feed solenoid connector terminals.	Reinsert the connector. Also check for continuity within the connector cable. If none, remedy or replace the cable.
	Defective engine controller PWB.	If the toner feed solenoid turns on when CN9-B2 on the engine controller PWB goes low. If not, replace the engine controller PWB.

Problem	Causes	Check procedures/corrective measures
(25) The cleaning lamp does not turn on.	Poor contact in the cleaning lamp connector terminals.	Reinsert the connector. Also check for continuity within the connector cable. If none, remedy or replace the cable.
	Defective cleaning lamp.	Check for continuity. If none, replace the cleaning lamp.
	Defective engine controller PWB.	If the cleaning lamp turns on when CN9-B7 on the engine controller PWB is held low, replace the engine controller PWB.
(26) The fuser heater does not turn on (C6000).	Broken wire in fuser heater M or S.	Check for continuity across each heater. If none, replace the heater M or S.
	Fuser unit thermostat triggered.	Check for continuity across thermostat. If none, remove the cause and replace the thermostat.
(27) The fuser heater does not turn off.	Broken fuser unit thermistor wire.	Measure the resistance. If it is ∞ Ω, replace the fuser unit thermistor.
	Dirty sensor part of the fuser unit thermistor.	Check visually and clean the thermistor sensor parts.
(28) Main charging is not performed.	Broken main charger wire.	Replace the main charger unit.
	Leaking main charger housing.	Clean the main charger wire, grid and shield.
	Poor contact in the high-voltage transformer unit connector terminals.	Reinsert the connector. Also check for continuity within the connector cable. If none, remedy or replace the cable.
	Defective engine controller PWB.	Replace the engine controller PWB (see page 1-6-24).
	Defective high- voltage transformer unit.	Replace the high-voltage transformer unit (see page 1-6-26).
(29) Transfer charging is not performed.	Poor contact in the high-voltage transformer unit connector terminals.	Reinsert the connector. Also check for continuity within the connector cable. If none, remedy or replace the cable.
	Defective engine controller PWB.	Replace the engine controller PWB (see page 1-6-24).
	Defective high-voltage transformer unit.	Replace the high-voltage transformer unit (see page 1-6-26).
(30) No developing bias is output.	Defective engine controller PWB.	Replace the engine controller PWB (see page 1-6-24).
	Defective high-voltage transformer unit.	Replace the high-voltage transformer unit (see page 1-6-26).
(31) The message requesting paper to be loaded is shown when paper is present in the upper cassette.	Poor contact in the upper paper switch connector terminals.	Reinsert the connector. Also check for continuity within the connector cable. If none, remedy or replace the cable.
	Defective upper paper switch.	Check if CN13-B12 on the engine controller PWB goes low when the upper paper switch is turned on with 5 V DC present at CN13-B13 on the engine controller PWB. If not, replace the upper paper switch.

Problem	Causes	Check procedures/corrective measures
(32) The message requesting paper to be loaded is shown when paper is present in the lower cassette.	Poor contact in the lower paper switch connector terminals.	Reinsert the connector. Also check for continuity within the connector cable. If none, remedy or replace the cable.
	Defective lower paper switch.	Check if CN13-B18 on the engine controller PWB goes low when the upper paper switch is turned on with 5 V DC present at CN13-B19 on the engine controller PWB. If not, replace the lower paper switch.
(33) The message requesting paper to be loaded is shown when paper is present on the MP tray.	Poor contact in the MP paper switch connector terminals.	Reinsert the connector. Also check for continuity within the connector cable. If none, remedy or replace the cable.
	Defective MP paper switch.	Check if CN6-A6 on the engine controller PWB goes low when the MP paper switch is turned on with 5 V DC present at CN6-A5 on the engine controller PWB. If not, replace the MP paper switch.
(34) The size of paper in the upper cassette is not displayed correctly.	Poor contact in the upper paper length switch connector terminals.	Reinsert the connector. Also check for continuity within the connector cable. If none, remedy or replace the cable.
	Defective upper paper length switch.	Check if CN13-B2 on the engine controller PWB goes low when the upper paper length switch is turned on. If not, replace the upper paper length switch.
	Poor contact in the upper paper width switch connector terminals.	Reinsert the connector. Also check for continuity within the connector cable. If none, remedy or replace the cable.
	Defective upper paper width switch.	Check if the levels of CN12-3, CN12-4 and CN12-5 on the engine controller PWB change alternately when the width guide in the upper cassette is moved. If not, replace the upper paper width switch.
(35) The size of paper in the lower cassette is not displayed correctly.	Poor contact in the lower paper length switch connector terminals.	Reinsert the connector. Also check for continuity within the connector cable. If none, remedy or replace the cable.
	Defective lower paper length switch.	Check if CN13-A19 on the engine controller PWB goes low when the lower paper length switch is turned on. If not, replace the lower paper length switch.
	Poor contact in the lower paper width switch connector terminals.	Reinsert the connector. Also check for continuity within the connector cable. If none, remedy or replace the cable.
	Defective lower paper width switch.	Check if the levels of CN12-9, CN12-10 and CN12-11 on the engine controller PWB change alternately when the width guide in the lower cassette is moved. If not, replace the lower paper width switch.
(36) The printing width of the paper on the MP tray is not detected correctly.	Poor contact in the MP paper length switch connector terminals.	Reinsert the connector. Also check for continuity within the connector cable. If none, remedy or replace the cable.
	Defective MP paper length switch.	Check if CN6-B11 on the engine controller PWB goes low when the MP paper length switch is turned on. If not, replace the MP paper length switch.
	Poor contact in the MP paper width switch connector terminals.	Reinsert the connector. Also check for continuity within the connector cable. If none, remedy or replace the cable.

Problem	Causes	Check procedures/corrective measures
(36) The printing width of the paper on the MP tray is not detected correctly.	Defective MP paper width switch.	Check if the levels of CN6-A1, CN6-A2 and CN6-A3 on the engine controller PWB change alternately when the insert guide on the MP table is moved. If not, replace the MP paper width switch.
(37) A paper jam in the paper feed, paper conveying or fuser section is indicated when the power switch is turned on.	A piece of paper torn from print paper is caught around feed switch 1/2/3, registration switch, feedshift switch or eject switch.	Check and remove if any.
	Defective feed switch 1.	Run maintenance item U031 and turn feed switch 1 on and off manually. If "1" is not displayed when the switch is on or "0" is not displayed when the switch is off, replace feed switch 1.
	Defective feed switch 2.	Run maintenance item U031 and turn feed switch 2 on and off manually. If "1" is not displayed when the switch is on or "0" is not displayed when the switch is off, replace feed switch 2.
	Defective feed switch 3.	Run maintenance item U031 and turn feed switch 3 on and off manually. If "1" is not displayed when the switch is on or "0" is not displayed when the switch is off, replace feed switch 3.
	Defective registration switch.	Run maintenance item U031 and turn the registration switch on and off manually. If "1" is not displayed when the switch is on or "0" is not displayed when the switch is off, replace registration switch.
	Defective eject switch.	Run maintenance item U031 and turn the eject switch on and off manually. If "1" is not displayed when the switch is on or "0" is not displayed when the switch is off, replace eject switch.
	Defective feedshift switch.	Run maintenance item U031 and turn the feedshift switch on and off manually. If "1" is not displayed when the switch is on or "0" is not displayed when the switch is off, replace feedshift switch.
(38) The message requesting covers to be closed is displayed when the front cover and conveying cover are closed.	Poor contact in the connector terminals of safety switch 1 or 2.	Reinsert the connector. Also check for continuity within the connector cable. If none, remedy or replace the cable.
	Defective safety switch 1 or 2.	Check for continuity across each switch. If there is no continuity when the switch is on, replace it.
(39) Others.	Wiring is broken, shorted or makes poor contact.	Check for continuity. If none, repair.
	Noise.	Locate the source of noise and remove.

1-5-5 Mechanical problems

Problem	Causes/check procedures	Corrective measures
(1) No primary paper feed.	Check if the surfaces of the following rollers or pulleys are dirty with paper powder: upper/lower forwarding pulleys, upper/lower paper feed pulleys, upper/lower separation pulleys, feed rollers, registration rollers, MP forwarding pulleys, MP paper feed pulleys and MP separation pulleys.	Clean with isopropyl alcohol.
	Check if the upper/lower forwarding pulleys, upper/lower paper feed pulleys or upper/lower separation pulleys is deformed.	Check visually and replace any deformed pulleys (see page 1-6-2).
	Electrical problem with the following electromagnetic clutches: upper/lower paper feed clutches, feed clutches 1/2/3, MP paper feed clutch and MP feed clutch.	See pages 1-5-45 and 46.
(2) No secondary paper feed.	Check if the surfaces of the right and left registration rollers are dirty with paper powder.	Clean with isopropyl alcohol.
	Electrical problem with the registration clutch.	See page 1-5-46.
(3) Skewed paper feed.	Width guide in a cassette installed incorrectly.	Check the width guide visually and correct or replace if necessary.
	Deformed width guide in a cassette.	Repair or replace if necessary .
	Check if a pressure spring along the paper conveying path is deformed or out of place.	Repair or replace.
(4) Multiple sheets of paper are fed at one time.	Check if the upper or lower separation pulley is worn.	Replace the upper or lower separation pulley if it is worn (see page 1-6-2).
	Check if the paper is curled.	Change the paper.
(5) Paper jams.	Check if the paper is excessively curled.	Change the paper.
	Deformed guides along the paper conveying path.	Repair or replace if necessary.
	Check if the contact between the right and left registration rollers is correct.	Check visually and remedy if necessary.
	Check if the contact between the feed roller and feed pulley is correct.	Check visually and remedy if necessary.
	Check if the press roller is extremely dirty or deformed.	Clean or replace the press roller.
	Check if the contact between the heat roller and its separation claws is correct.	Repair if any springs are off the separation claws.
	Check if the contact between the eject roller and pulley is correct.	Check visually and remedy if necessary.
	The feedshift solenoid malfunctions.	See page 1-5-46.
(6) Toner drops on the paper conveying path.	Check if the developing unit is extremely dirty.	Clean the developing unit.

Problem	Causes/check procedures	Corrective measures
(7) Abnormal noise is heard.	Check if the pulleys, rollers and gears operate smoothly.	Grease the bearings and gears.
	Check if the following electromagnetic clutches are installed correctly: upper/lower paper feed clutches, feed clutches 1/2/3, MP paper feed clutch and MP feed clutch.	Correct.

1-5-6 Repetitive defects gauge

(1) Repetitive defects gauge
Use the following measurements for checking repetitive occurrences on the printed page.

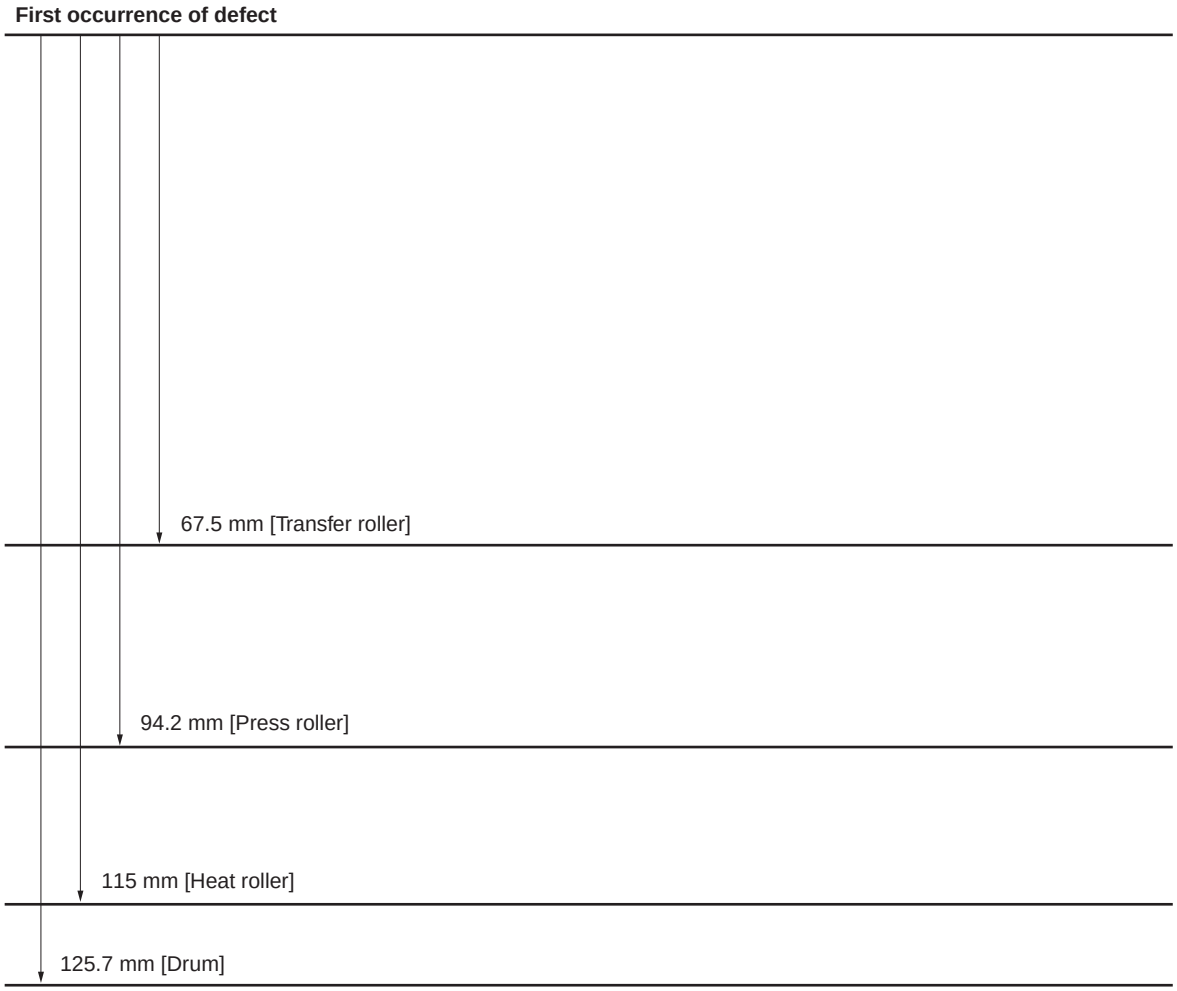

Figure 1-5-2 Repetitive defects gauge

CONTENTS

1-6 Assembly and disassembly

1-6-1 Precautions for assembly and disassembly 1-6-1
(1) Precautions 1-6-1
1-6-2 Paper feed section 1-6-2
(1) Detaching and refitting the forwarding, paper feed and separation pulleys 1-6-2
(2) Detaching and refitting the MP separation, MP paper feed and MP forwarding pulleys 1-6-4
(3) Detaching and refitting the left and right registration cleaner 1-6-9
1-6-3 Laser scanner unit 1-6-11
(1) Detaching and refitting the laser scanner unit 1-6-11
(2) Adjusting the skew of the laser scanner unit (reference) 1-6-13
1-6-4 Drum section 1-6-14
(1) Detaching and refitting the drum unit 1-6-14
(2) Detaching and refitting the main charger unit 1-6-14
(3) Detaching and refitting the drum separation claw assemblies 1-6-15
1-6-5 Developing section 1-6-16
(1) Detaching and refitting the developing unit 1-6-16
1-6-6 Transfer section 1-6-17
(1) Detaching and refitting the transfer roller assembly 1-6-17
1-6-7 Fuser section 1-6-18
(1) Detaching and refitting the fuser unit 1-6-18
(2) Detaching and refitting the heat roller separation claws 1-6-18
(3) Detaching and refitting the press roller 1-6-19
(4) Detaching and refitting the fuser heater M and S 1-6-20
(5) Detaching and refitting the heat roller 1-6-21
(6) Detaching and refitting the fuser unit thermistor 1-6-22
1-6-8 PWBs 1-6-23
(1) Detaching and refitting the main controller PWB 1-6-23
(2) Detaching and refitting the engine controller PWB 1-6-24
(3) Detaching and refitting the power supply unit 1-6-25
(4) Detaching and refitting the high-voltage transformer unit 1-6-26
(5) Detaching and refitting the operator panel PWB 1-6-27

1-6-1 Precautions for assembly and disassembly

(1) Precautions

- When handling PWBs (printed wiring boards), do not touch connectors with bare hands. It will damage the PWB.
- Do not touch any PWB containing ICs with bare hands or any object prone to static charge.
- Use only the specified part when to replacing the thermostat in the fuser. Never substitute electric wires, as the printer may be seriously damaged.

1-6-2 Paper feed section

(1) Detaching and refitting the forwarding, paper feed and separation pulleys
Follow the procedure below to replace the forwarding, paper feed and separation pulleys.

Procedure
• Removing the primary paper feed units
1. Open the front cover and pull out the upper and lower cassettes.
2. Remove the one screw from each of the primary paper feed units and then the units.

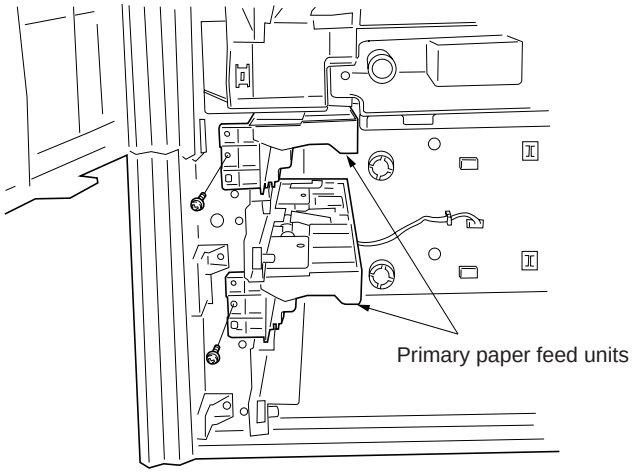

Figure 1-6-1

• Removing the forwarding pulley
3. Remove the stopper.
4. Raise the forwarding pulley retainer in the direction the arrow, and remove from the primary paper feed unit.

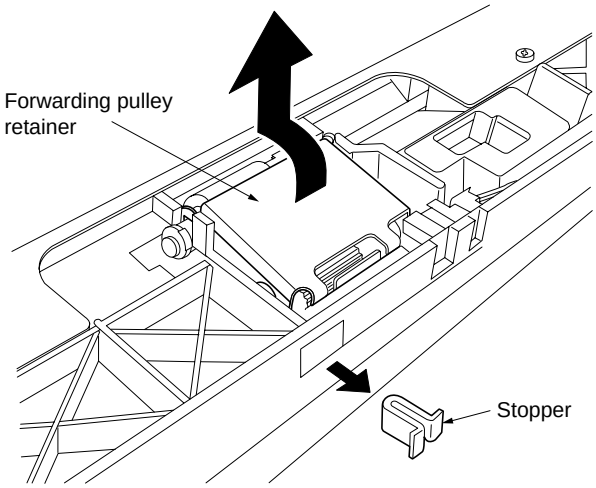

Figure 1-6-2

5. Remove the stop ring, pull the forwarding pulley shaft in the direction of the arrow, and remove the forwarding pulley.

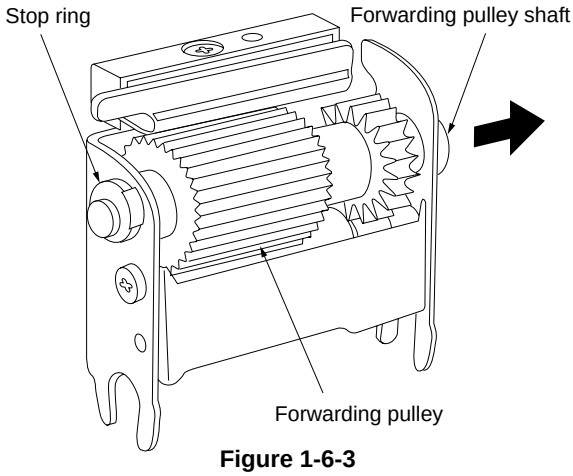

Figure 1-6-3

• Removing the paper feed pulley

6. Remove the two stop rings.
7. Pull the paper feed shaft toward the rear of the primary paper feed unit (in the direction of the arrow) and remove the paper feed pulley.

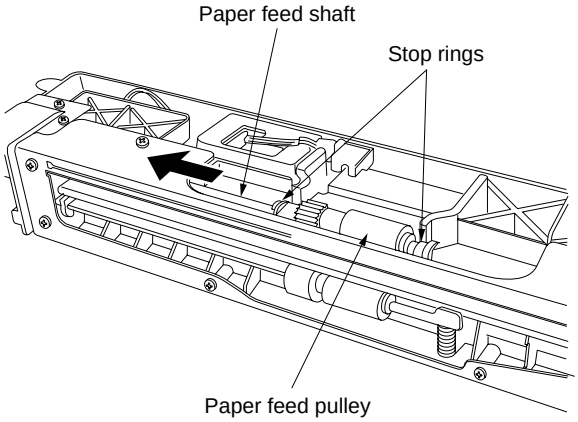

Figure 1-6-4

• Removing the separation pulley

8. Remove the stop ring on the rear of the primary paper feed unit.
9. Pull the separation shaft toward the machine rear (in the direction of the arrow) and remove the separation pulley.

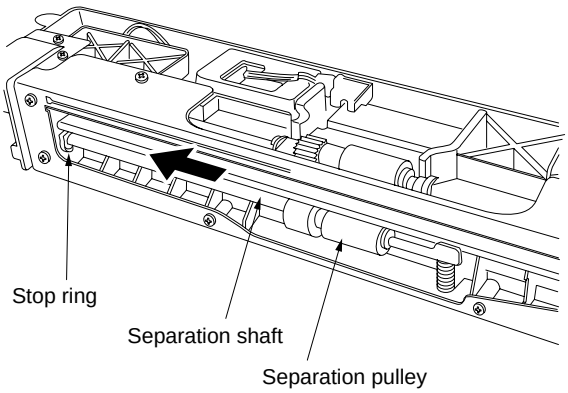

Figure 1-6-5

10. Replace the forwarding, paper feed and separation pulleys.

Caution:

• When fitting the forwarding pulley, orient it correctly as shown in Figure 1-6-6.
• When fitting the separation pulley, keep the blue end of the separation toward the machine rear.

11. Refit all removed parts.

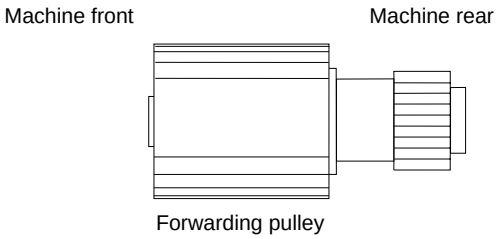

Figure 1-6-6

(2) Detaching and refitting the MP separation, MP paper feed and MP forwarding pulleys
Follow the procedure below to replace the MP separation, MP paper feed and MP forwarding pulleys.

Procedure
• Removing the MP tray unit
1. Remove the four screws holding the lower right cover and then the cover.

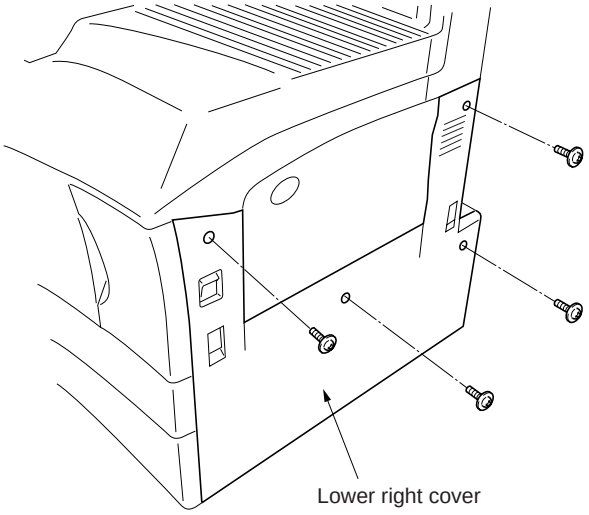

Figure 1-6-7

2. Remove the two screws holding the MP tray unit and disconnect the two connectors, and then remove the unit.

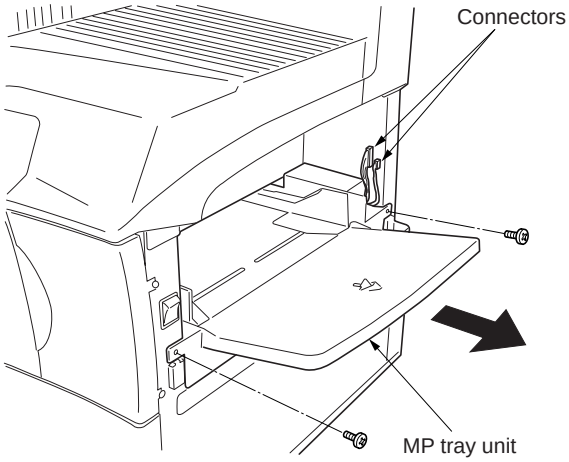

Figure 1-6-8

• Removing the MP separation pulley
3. Reverse the MP tray unit and remove the spring and stop ring from the MP separation pulley and move the bushing inside.

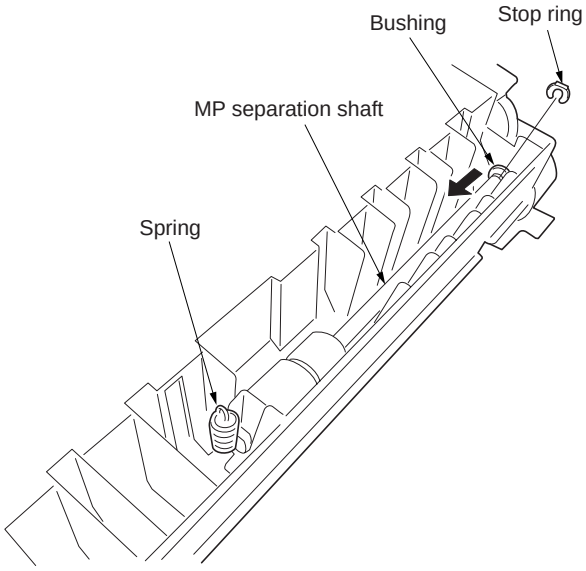

Figure 1-6-9

4. Raise the MP separation shaft as shown in the diagram, remove the holder plate and the bushing, and then remove the MP separation pulley.
   * Take care not to remove the spring pin of the gear at the rear of the MP separation shaft. If it is removed, refit it to its original position.

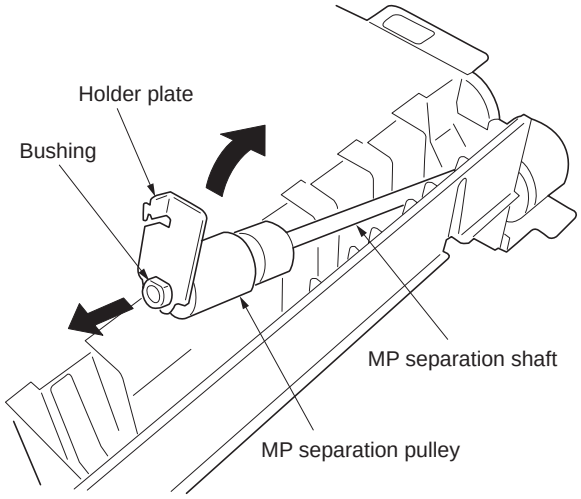

Figure 1-6-10

• Removing the MP paper feed pulley

5. Detach the connector of the MP paper switch and remove the wire from the three clamps.
6. Remove the screw holding the MP tray unit cover and then the cover.

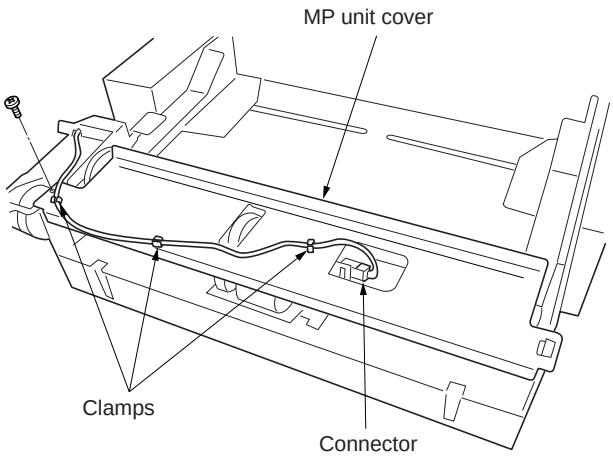

Figure 1-6-11

7. Remove the stop ring and bushing on the front of the MP paper feed shaft.

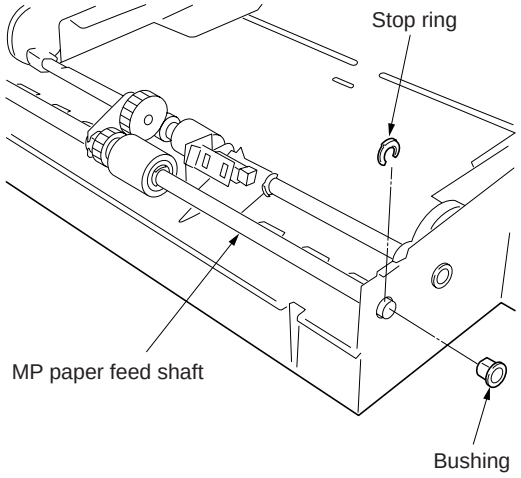

Figure 1-6-12

8. Raise the MP paper feed shaft as shown in the illustration, remove the stop ring, and then remove the MP paper feed pulley.

Caution:

• When fitting the MP paper feed pulley, keep the blue end of the paper feed toward the machine rear.

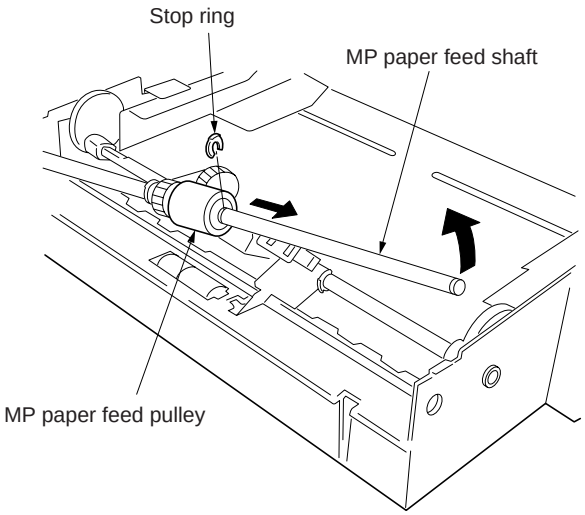

Figure 1-6-13

• Removing the MP forwarding pulley

9. Remove the wire of the MP paper feed clutch from the clamp.
10. Remove the stop ring and MP paper feed clutch.
    • When refitting, insert the cutout in the MP paper feed clutch over the stopper on the copier.

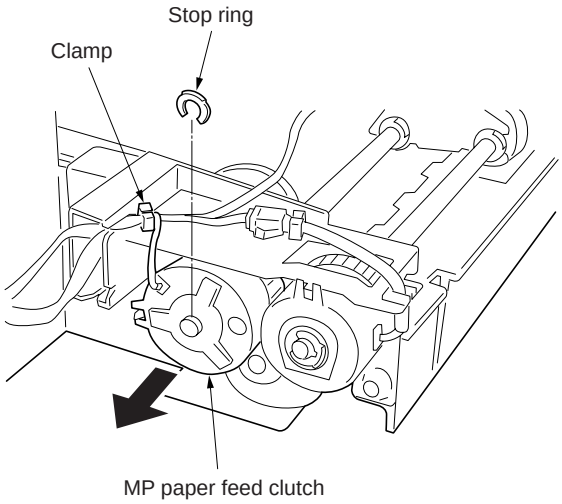

Figure 1-6-14

11. Remove the screw from the cam at the rear of the MP forwarding pulley shaft and move the cam and the bushing toward the inner side.

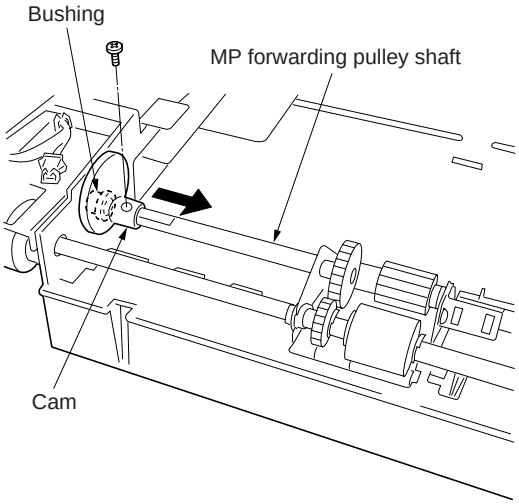

Figure 1-6-15

12. Remove the stop ring of the MP paper feed shaft and slide the bushing in the direction of the arrow.

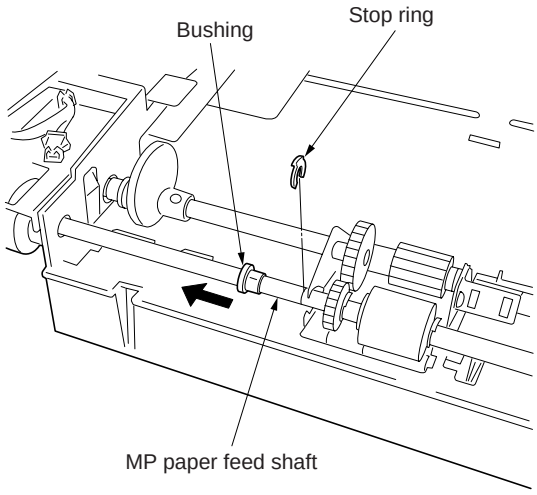

Figure 1-6-16

13. Slide the MP forwarding pulley shaft temporarily toward the rear side and then raise it to remove from the MP tray unit.
    * Remove the shaft while raising the actuator of the MP paper switch.

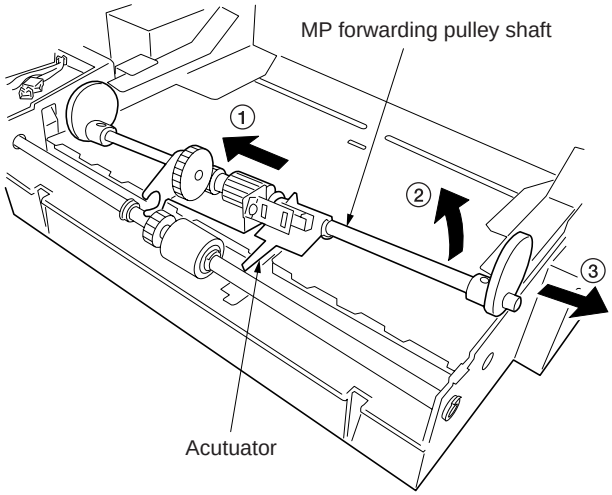

Figure 1-6-17

14. Remove the bushing an cam on the rear of the MP forwarding pulley shaft.

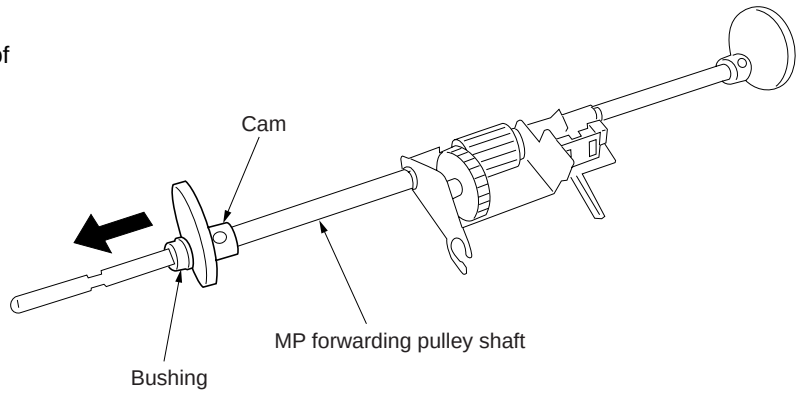

Figure 1-6-18

15. Remove the stop ring and slide the MP forwarding pulley with the forwarding pulley retainer from the shaft to remove it.
16. Replace the MP separation, MP paper feed and MP forwarding pulleys.

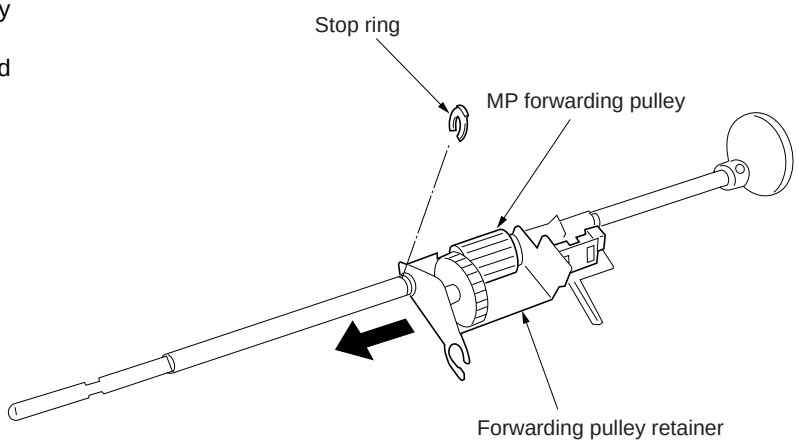

Figure 1-6-19

17. Refit all removed parts.
    * Fit the MP tray unit cover so that the film on the cover is positioned under the MP paper feed shaft.

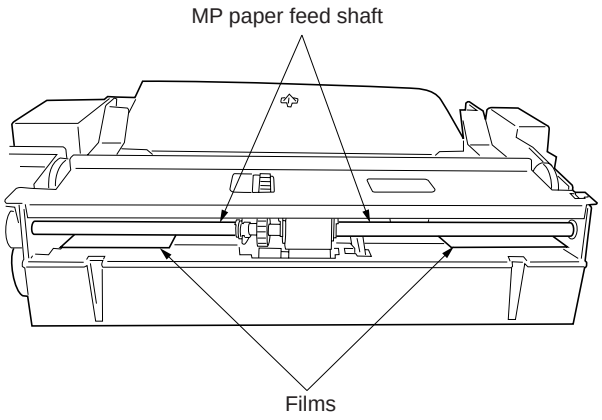

Figure 1-6-20

(3) Detaching and refitting the left and right registration cleaner
Follow the procedure below to replace the left or right registration cleaner.

Procedure
• Left registration cleaner
1. Open the conveying cover and remove the transfer roller assembly (see page 1-6-17).
2. Remove the front and rear roller stoppers, then the left registration roller.
   * Remove the roller stopper while pushing with a slotted screwdriver or the like.
3. Detach the films at two positions from the housing.

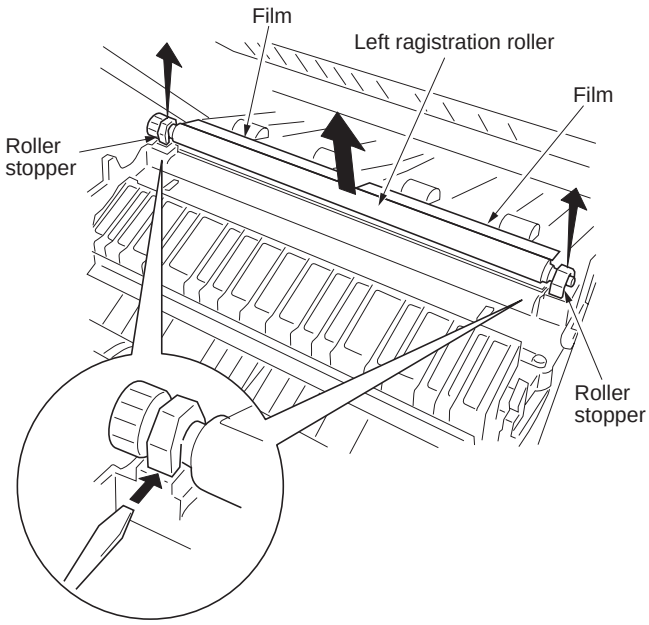

Figure 1-6-21

4. Detach the left registration cleaner from the housing.
5. Replace the left registration cleaner and refit the new one to the housing.
   * To refit the left registration cleaner, refit it so that the projections at the front and rear parts of left registration cleaner are placed in the grooves of the housing.
6. Refit the left registration roller and roller stopper.
7. Replace the film that was detached in Step 3 with the new one and stick to the housing.
8. Refit all removed parts.

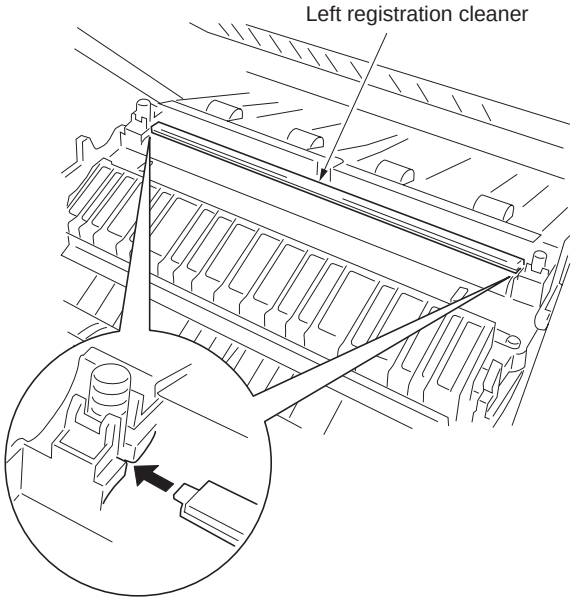

Figure 1-6-22

• Right registration cleaner
1. Remove the developing unit and drum unit (see pages 1-6-14 and 16).
2. Remove the right registration cleaner.
3. Replace the right registration cleaner and refit all the removed parts.
   * To install the right registration cleaner, install it holding the frame of the registration guide between the cleaner.

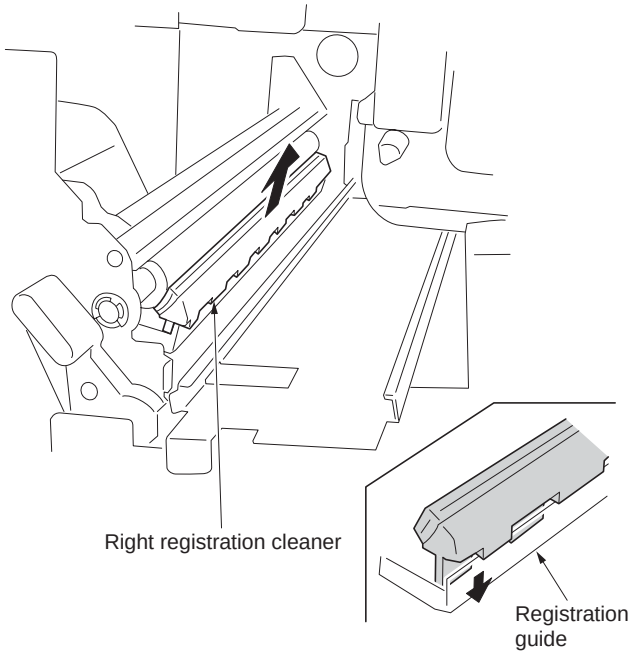

Figure 1-6-23

1-6-3 Laser scanner unit

(1) Detaching and refitting the laser scanner unit

Take the following procedure when the laser scanner unit is to be checked or replaced.

Procedure

1. Remove the developing unit and drum unit (see pages 1-6-14 and 16).
2. Remove the four screws holding the lower right cover and then the cover.
   Remove the three screws holding the eject cover and then the cover.

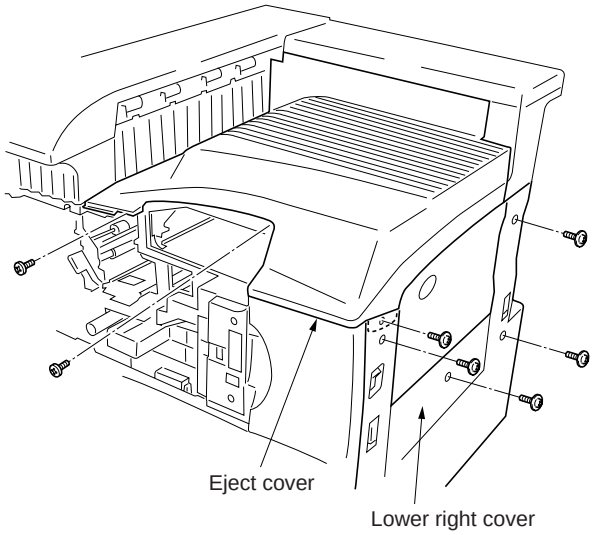

Figure 1-6-24

3. Remove the four screws holding the front right cover and then the cover.

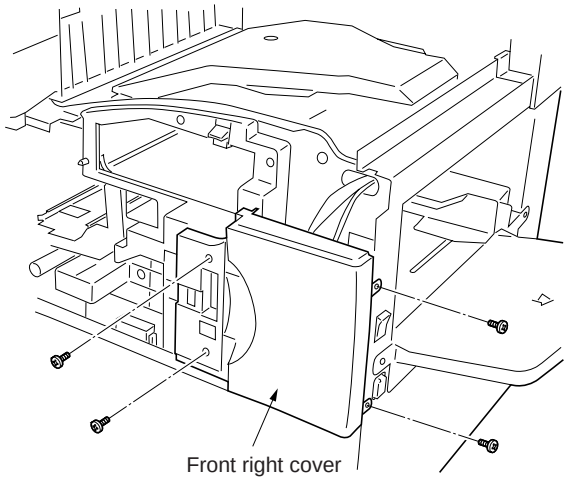

Figure 1-6-25

4. Remove the five screws holding the inner cover and then the cover.

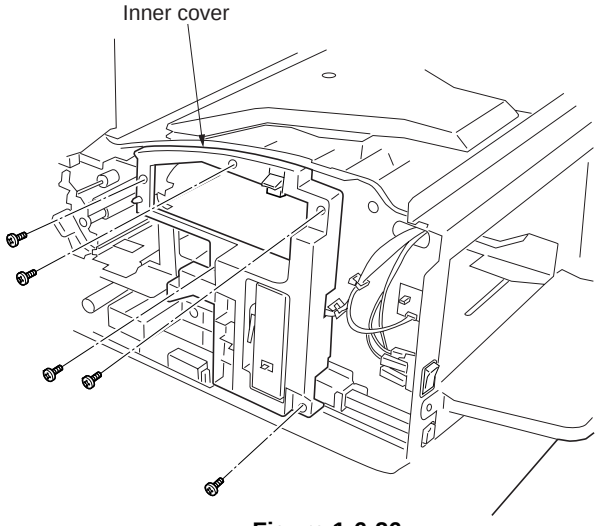

Figure 1-6-26

5. Remove the two screws and detach the connector and then remove the fan duct.

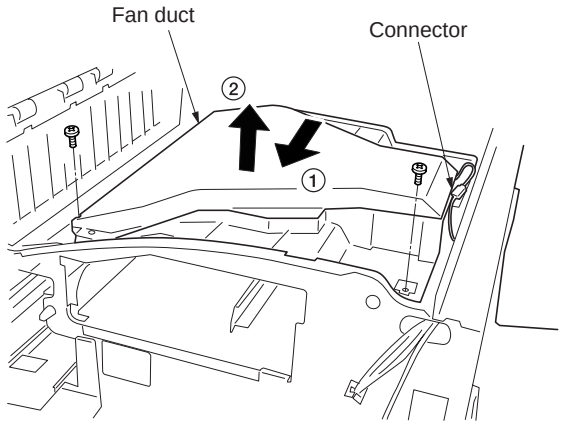

Figure 1-6-27

6. Remove the six screws holding the toner container retainer and then the retainer.

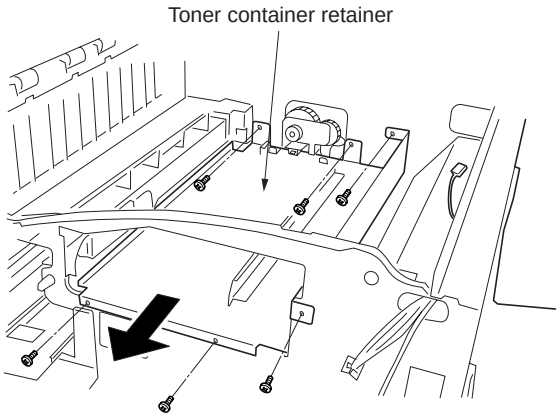

Figure 1-6-28

7. Remove the four screws and detach the connector and then remove the laser scanner unit.
8. Replace the laser scanner unit and refit all the removed parts.
   When installing the laser scanning unit, tighten the screws in the order of 1 to 4 shown in the illustration.
9. Enter the maintenance mode and run U274 Setting LSU type. (See page 1-4-21.)

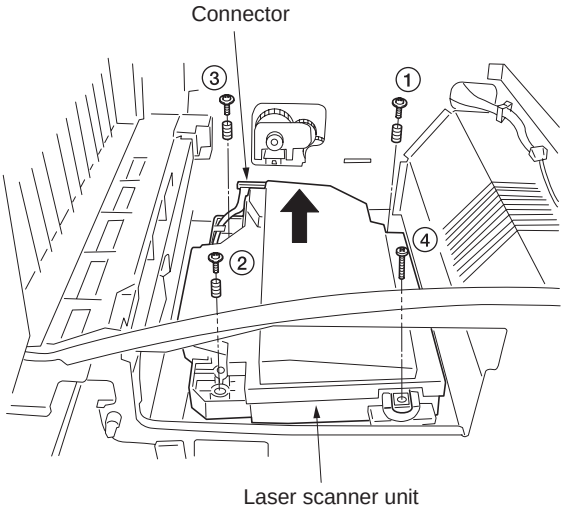

Figure 1-6-29

(2) Adjusting the skew of the laser scanner unit (reference)

Perform the following adjustment if the leading and trailing edges of the print image are laterally skewed (lateral squareness not obtained).

Since this adjustment uses the test page that is output from the maintenance mode, prepare the compact flash card to which the maintenance mode has been written and load the maintenance mode to the printer to carry out this adjustment. (See page 1-4-7.)

Procedure

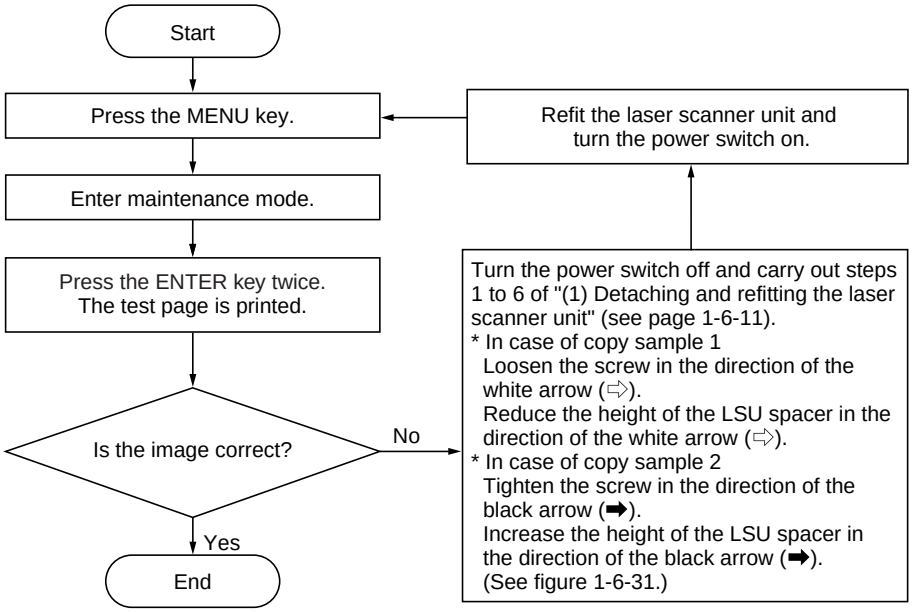

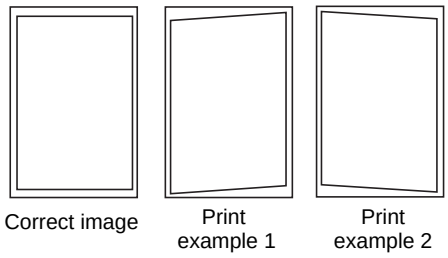

Figure 1-6-30

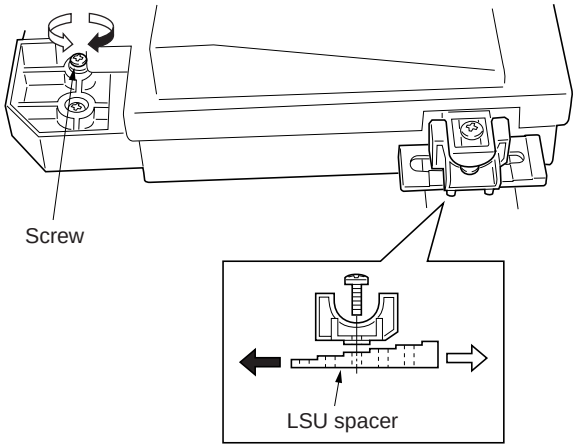

Figure 1-6-31

1-6-4 Drum section

(1) Detaching and refitting the drum unit
Follow the procedure below to replace the drum unit.

Cautions:
- Avoid direct sunlight or strong light when detaching and refitting the drum unit.
- Never touch the drum surface when holding the drum unit.

Procedure
1. Open the front cover.
2. Remove the toner container and toner disposal tank.
3. Open the conveying cover and remove the developing unit (see page 1-6-16).
4. Remove the screws holding the drum unit and then the unit.
5. Replace the drum unit and refit all the removed parts.

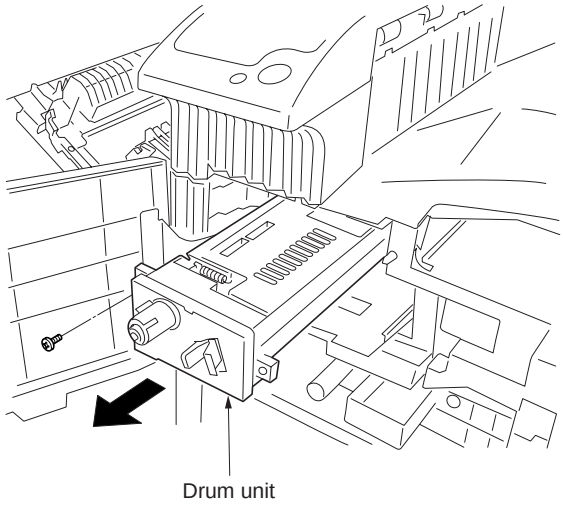

Figure 1-6-29

(2) Detaching and refitting the main charger unit
Follow the procedure below to replace the main charger unit.

Procedure
1. Open the front cover.
2. Pull out the main charger unit holding the knob.
3. While pushing the hole with a sharp-pointed object, remove the main charger unit.
4. Replace the main charger unit and refit all the removed parts.

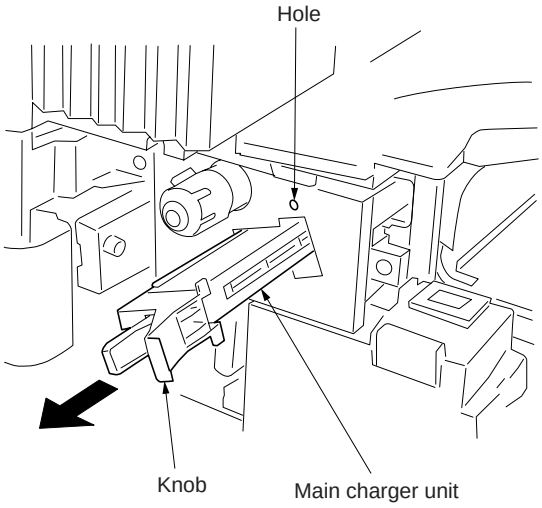

Figure 1-6-30

(3) Detaching and refitting the drum separation claw assemblies
Follow the procedure below to replace the drum separation claw assemblies.

Procedure

1. Remove the drum unit (see page 1-6-14).
2. Push the drum separation claw assemblies with the minus driver from the top of the corner hole and remove the claw assemblies.
3. Replace the drum separation claw assemblies and refit all the removed parts.

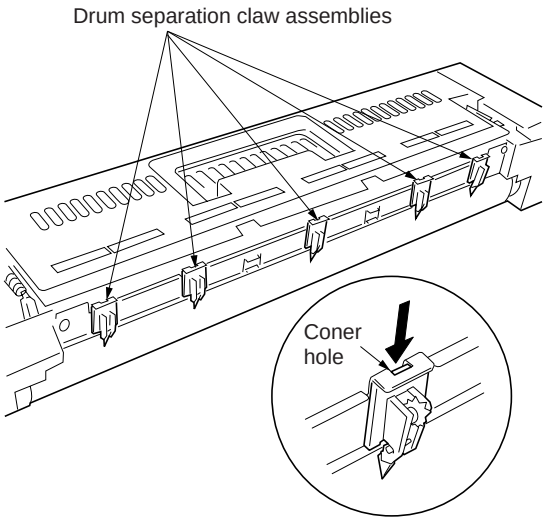

Figure 1-6-31

1-6-5 Developing section

(1) Detaching and refitting the developing unit
Follow the procedure below to replace the developing unit.

Procedure

1. Open the front cover.
2. Remove the toner container and toner disposal tank.
3. Remove the screw and turn the developing release lever in the direction of the arrow.

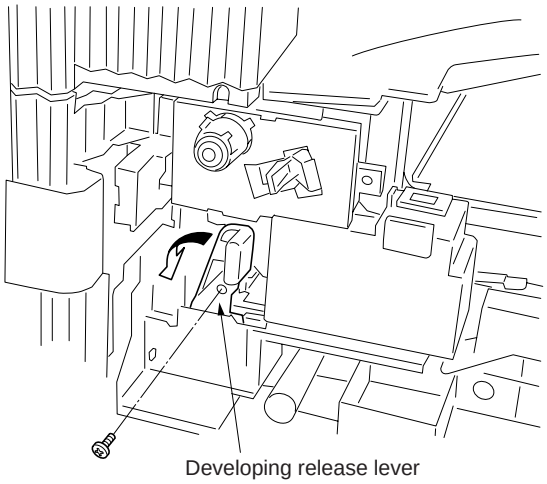

Figure 1-6-32

4. Remove the developing unit.
5. Replace the developing unit and refit all the removed parts.

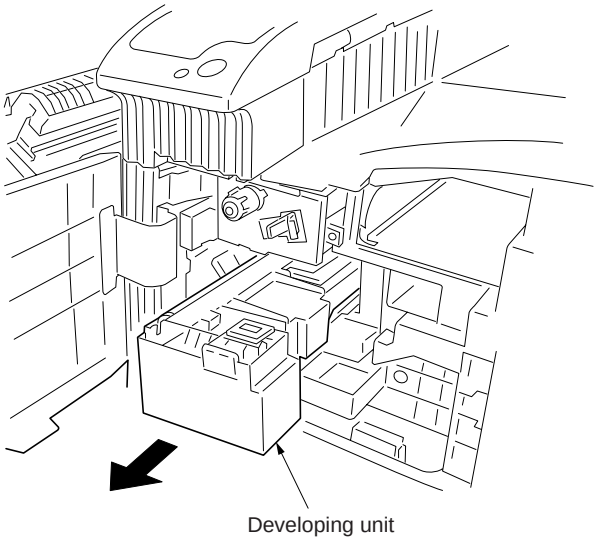

Figure 1-6-33

1-6-6 Transfer section

(1) Detaching and refitting the transfer roller assembly
Follow the procedure below to replace the transfer roller assembly.

Procedure
1. Open the conveying cover.
2. While holding down the projection, slide the transfer roller assembly toward the front to remove it.
3. Replace the transfer roller assembly and refit all the removed parts.

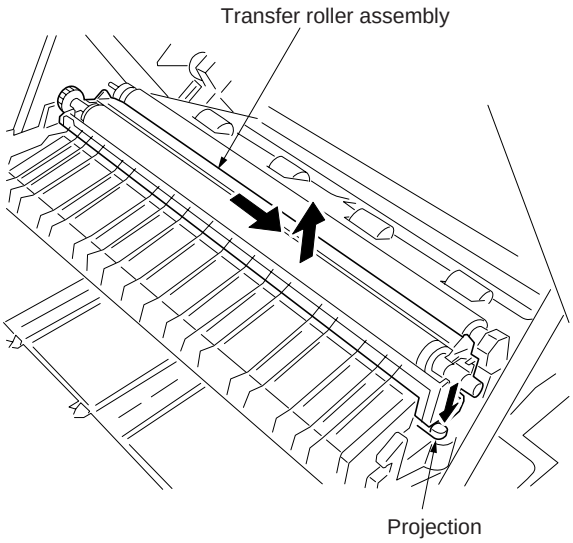

Figure 1-6-34

1-6-7 Fuser section

(1) Detaching and refitting the fuser unit
Follow the procedure below to check or replace the fuser unit.

Procedure
1. Open the front cover and conveying cover.
2. Remove the two screws holding the front left cover and then the cover.

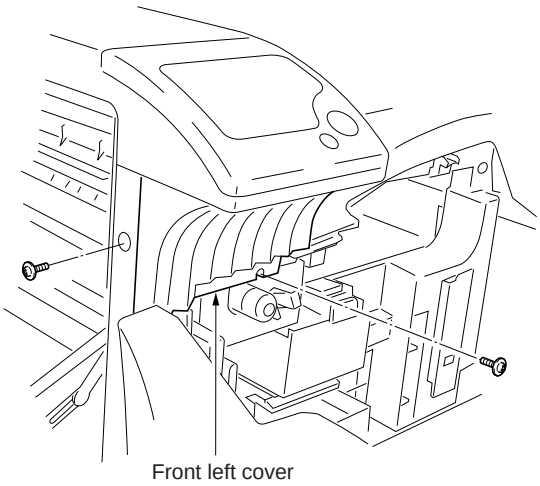

Figure 1-6-35

3. Remove the screw holding the fuser unit and then the unit.
4. Check or replace the fuser unit and refit all the removed parts.

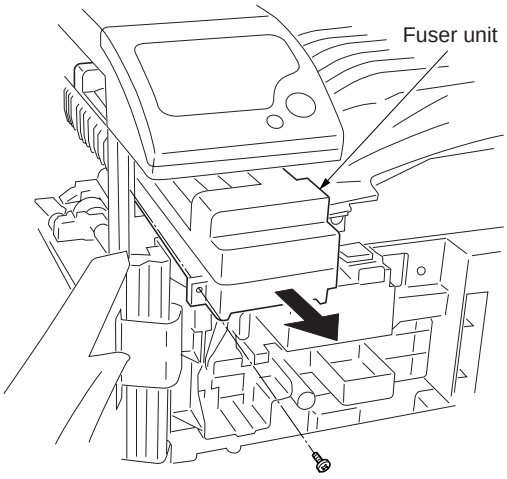

Figure 1-6-36

(2) Detaching and refitting the heat roller separation claws
Follow the procedure below to replace the heat roller separation claws.

Procedure
1. Remove the fuser unit.
2. Remove the two screws and detach the upper fuser cover while holding the four claws.

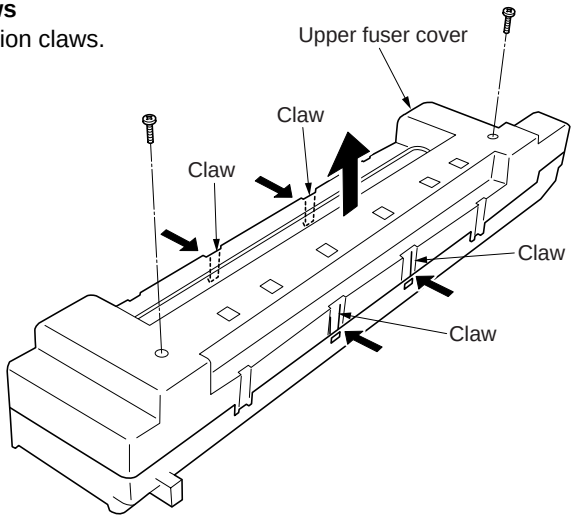

Figure 1-6-37

3. Remove the heat roller separation claws from the upper fuser cover.
4. Replace the heat roller separation claws and refit all the removed parts.

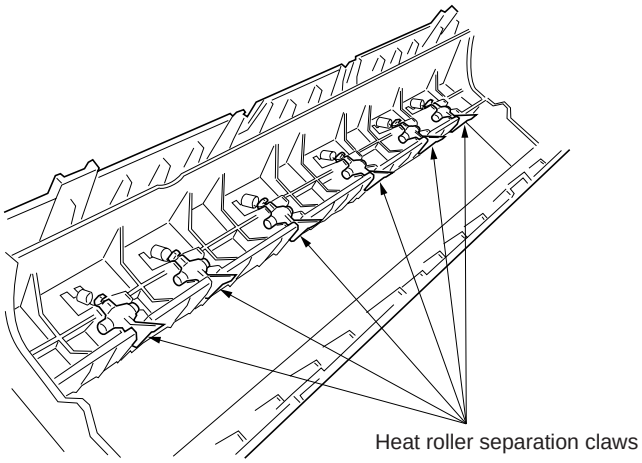

Figure 1-6-38

(3) Detaching and refitting the press roller

Follow the procedure below to replace the press roller.

Procedure

1. Remove the fuser unit (see page 1-6-18).
2. Remove the upper fuser cover (see page 1-6-18).
3. Remove the front and rear press springs.

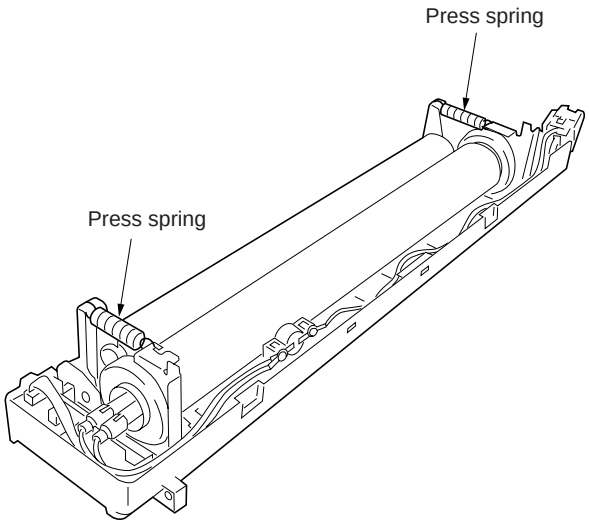

Figure 1-6-39

4. Detach the press roller from the fuser unit and remove the front and rear bearings.
5. Replace the press roller and refit all the removed parts.

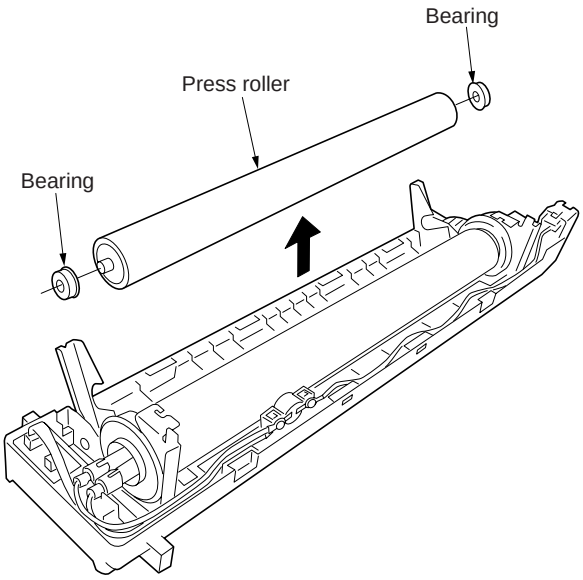

Figure 1-6-40

(4) Detaching and refitting the fuser heater M and S
Follow the procedure below to replace the fixing heater M and S.

Procedure
1. Remove the fuser unit (see page 1-6-18).
2. Remove the upper fuser cover (see page 1-6-18).
3. Remove the screw on the front of the fuser unit thermostat and two screws on the rear of the fuser unit.

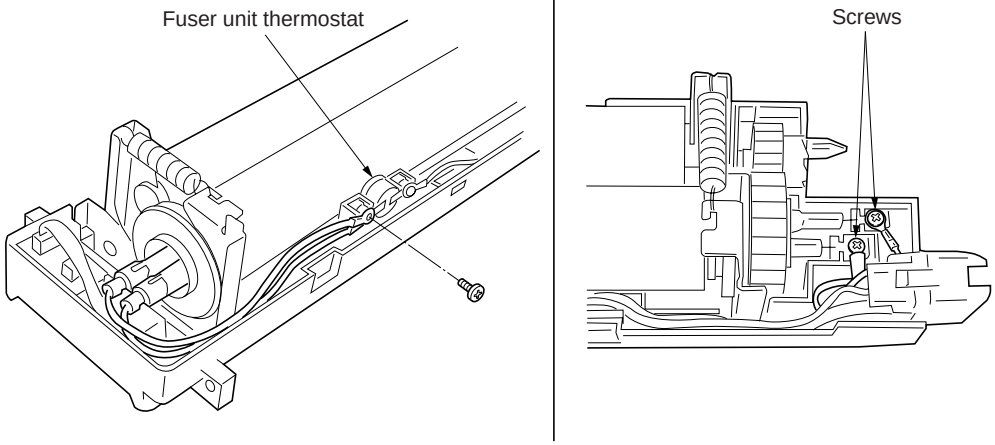

Figure 1-6-41

4. Pull out the fuser heater M and S from the fuser unit.

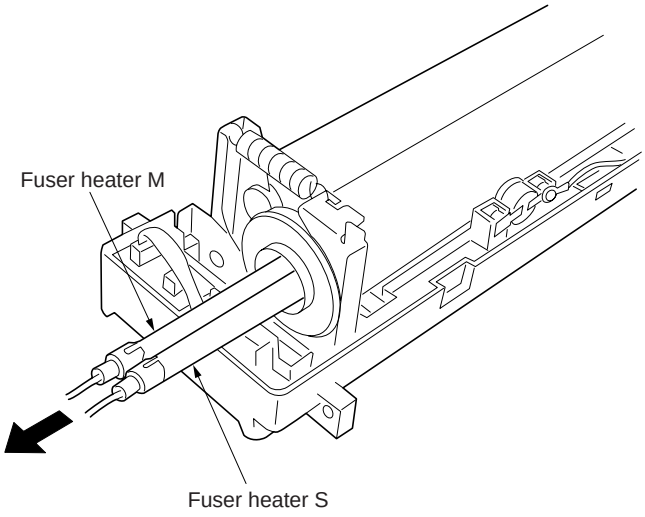

Figure 1-6-42

5. Replace the fuser heater M and S, and refit all the removed parts.
   * When refitting the fuser heaters, take care not to refit fuser heaters M and S to wrong positions. Refit fuser heater M (black wire) to the fuser unit housing with mark B and fuser heater S (white wire) to the housing with mark W.

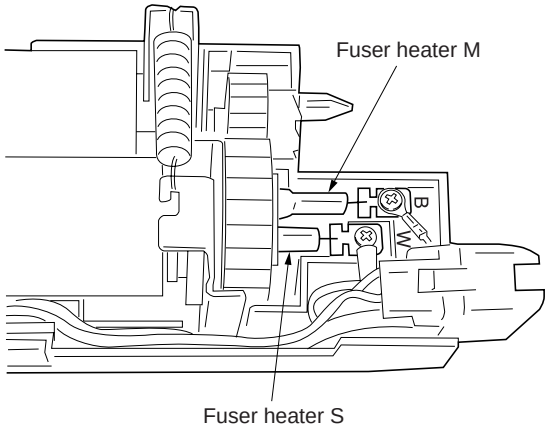

Figure 1-6-43

(5) Detaching and refitting the heat roller
Follow the procedure below to replace the heat roller.

Procedure

1. Remove the fuser unit (see page 1-6-18).
2. Remove the upper fuser cover (see page 1-6-18).
3. Remove the press roller and fuser heater M and S (see pages 1-6-18).
4. Remove the fuser gear.

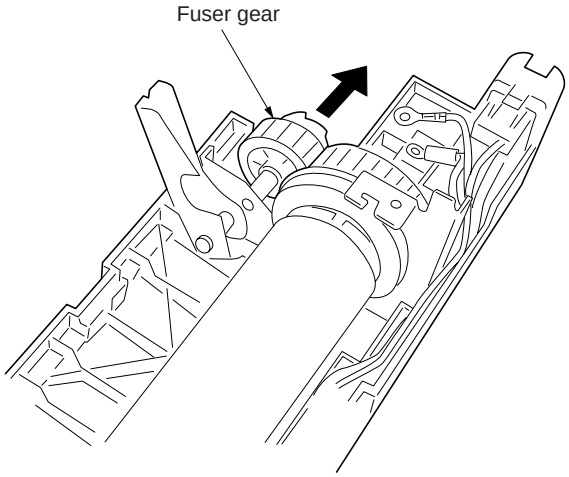

Figure 1-6-44

5. Detach the heat roller from the fuser unit. Remove the C ring, gear, bearing and bushing on the rear of the heat roller and then remove the C ring, bearing and bushing on the front.
6. Replace the heat roller and refit all the removed parts.

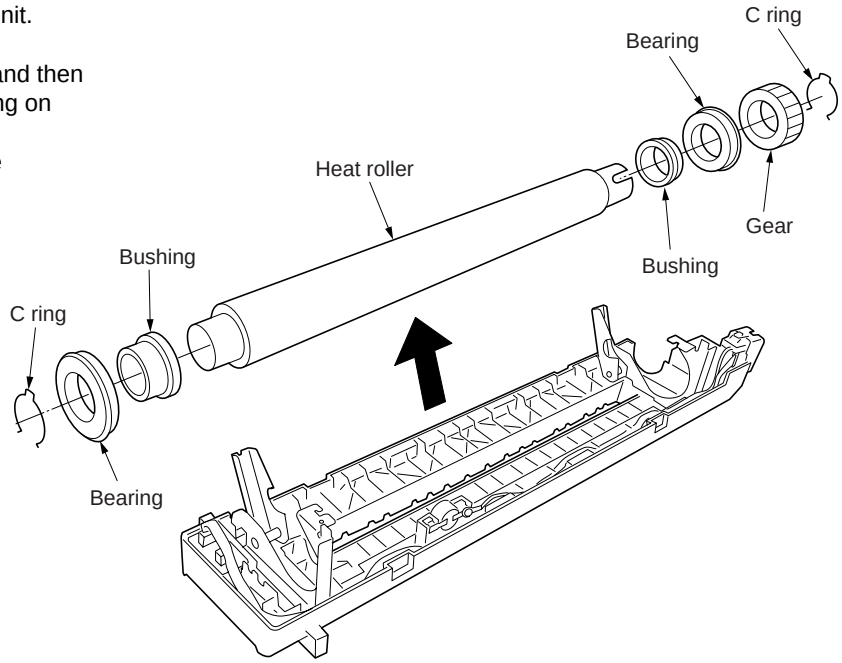

Figure 1-6-45

(6) Detaching and refitting the fuser unit thermistor
Follow the procedure below to replace the fuser unit thermistor.

Procedure
1. Remove the fuser unit (see page 1-6-18).
2. Remove the upper fuser cover (see page 1-6-18).
3. Disconnect the connector of the fuser unit thermistor.

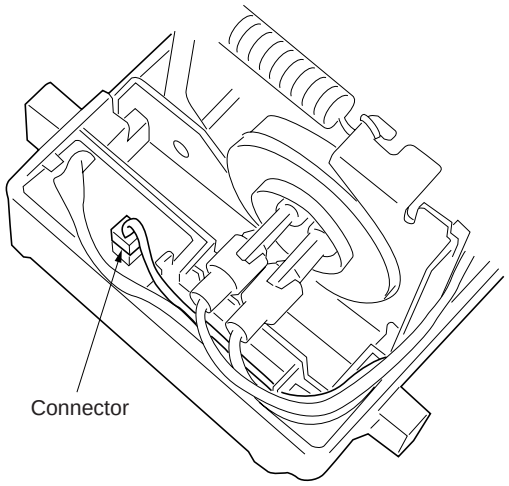

Figure 1-6-46

4. Remove the heat roller (see page 1-6-21).
5. Turn the fuser unit over and remove the screw to remove the fuser unit thermistor.

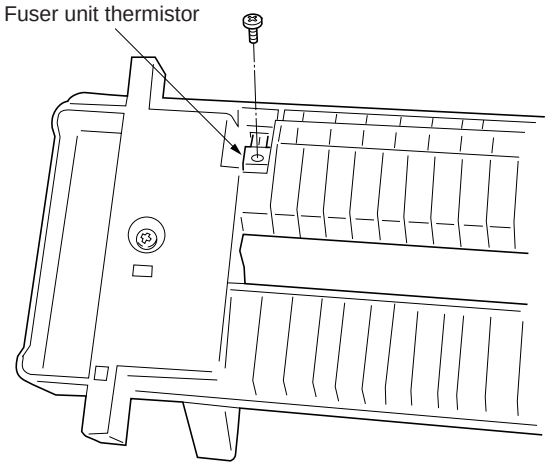

Figure 1-6-47

1-6-8 PWBs

(1) Detaching and refitting the main controller PWB
Follow the procedure below to detaching and refitting the main controller PWB.

Procedure
1. Remove the two screws.
2. Draw the main controller PWB.

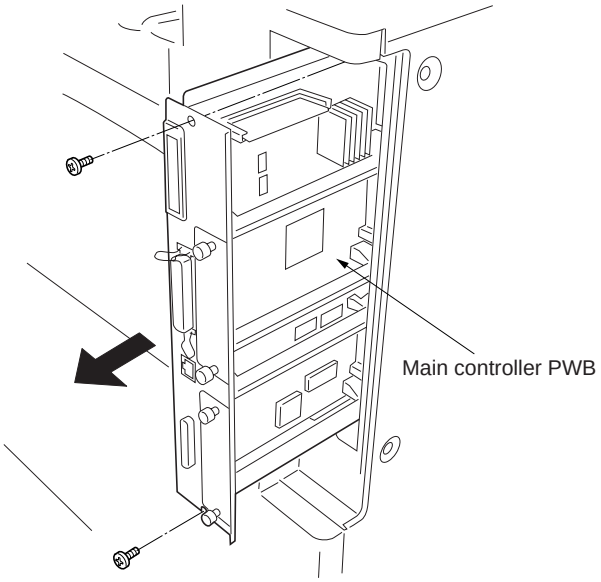

Figure 1-6-48

(2) Detaching and refitting the engine controller PWB

Follow the procedure below to detaching and refitting the engine controller PWB.

Procedure

1. Remove the eight screws and then remove the rear cover.

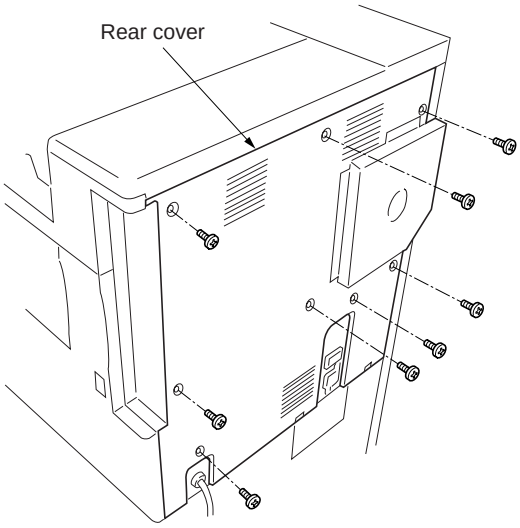

Figure 1-6-49

2. Remove the thirteen screws and then remove the controller-box cover.

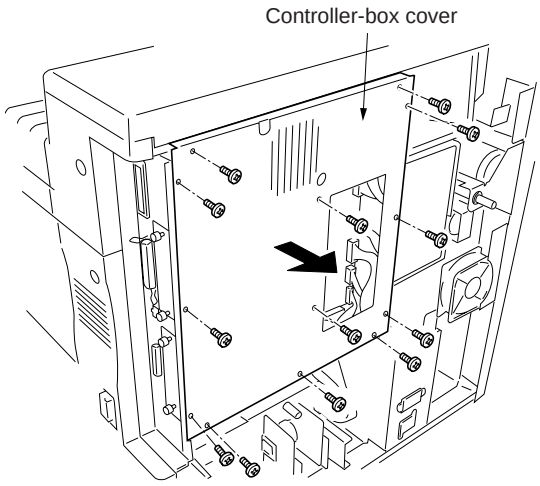

Figure 1-6-50

3. Remove all (fifteen) connectors from the engine controller PWB.
4. Remove six screws and then remove the engine controller PWB.
5. Replace the engine controller PWB and refit all the removed parts.

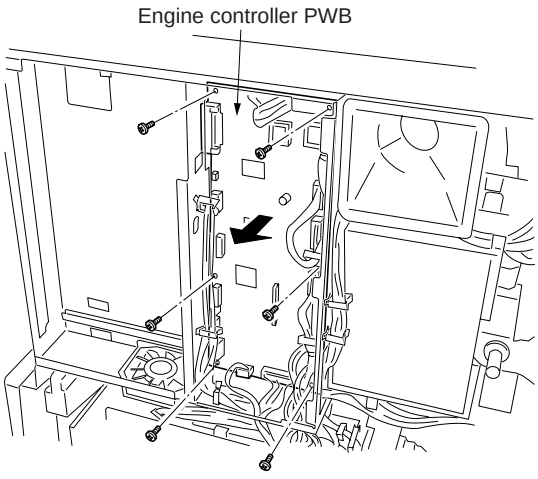

Figure 1-6-51

(3) Detaching and refitting the power supply unit
Follow the procedure below to detaching and refitting the power supply unit.

Procedure

1. Remove the eight screws and then remove the rear cover (see page 1-6-24).
2. Remove the thirteen screws and then remove the controller-box cover (see page 1-6-24).
3. Remove the five screws and the two connectors and then remove the power supply mount from the rear side of the machine.

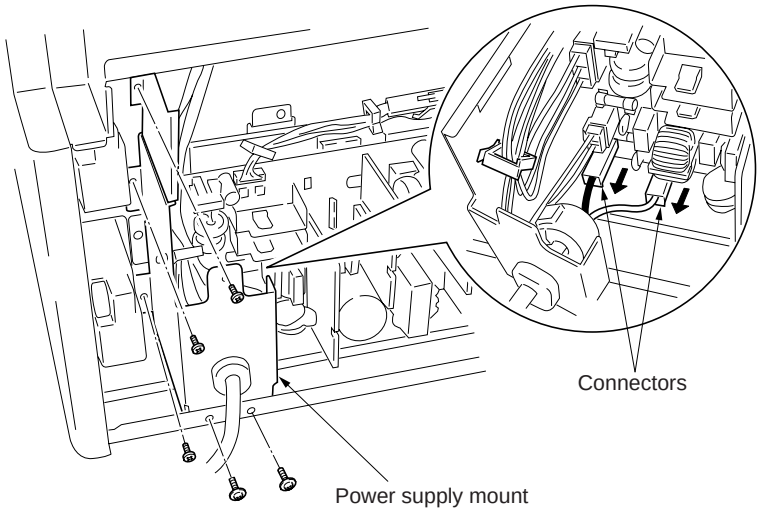

Figure 1-6-52

4. Remove all (five) connectors from the power supply unit.
5. Remove six screws and then remove the power supply unit.
6. Replace the power supply unit and refit all the removed parts.

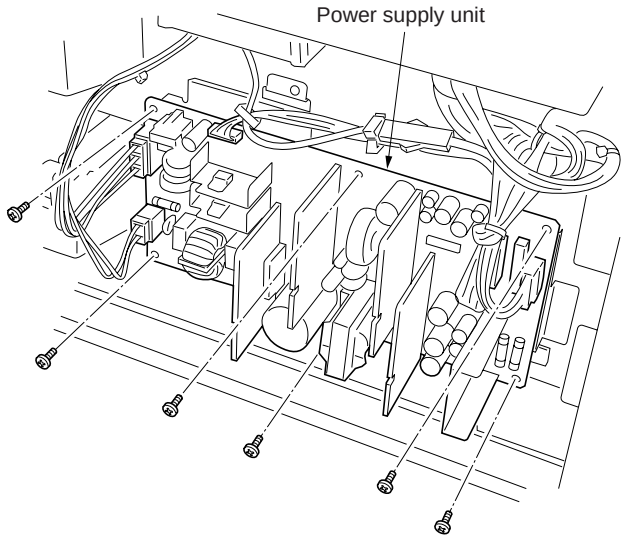

Figure 1-6-53

(4) Detaching and refitting the high-voltage transformer unit
Follow the procedure below to detaching and refitting the high-voltage transformer unit.

Procedure

1. Remove the eight screws and then remove the rear cover (see page 1-6-24).
2. Remove the thirteen screws and then remove the controller-box cover (see page 1-6-24).
3. Remove four screws and then remove the high-voltage transformer unit.
4. Replace the high-voltage transformer unit and refit all the removed parts.

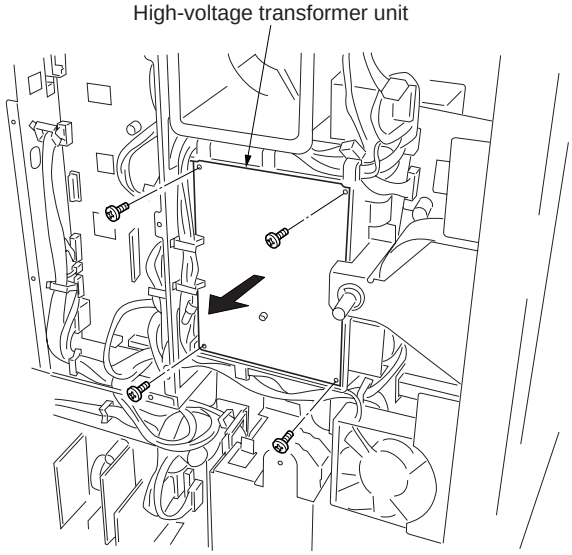

Figure 1-6-54

(5) Detaching and refitting the operator panel PWB

Follow the procedure below to detaching and refitting the operator panel PWB.

Procedure

1. Insert a flat-blade screwdriver or the like into the clearance and remove the operation panel cover.

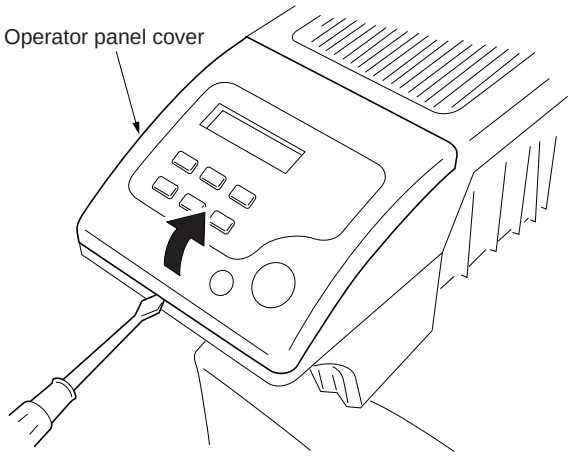

Figure 1-6-55

2. Remove the four screws and the connector and then remove the operator panel unit.

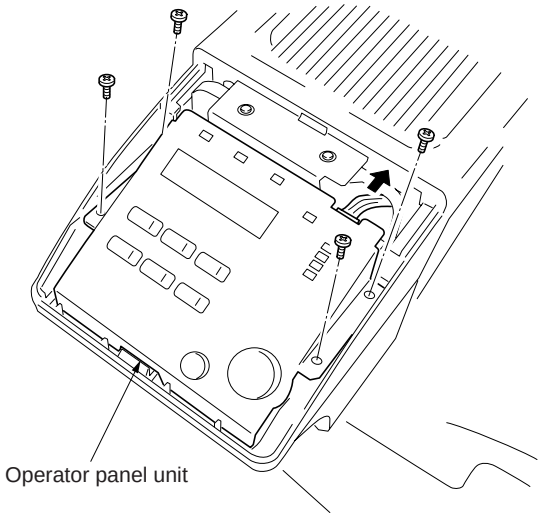

Figure 1-6-56

3. Remove eight screws and then remove the operator panel PWB.
4. Replace the operator panel PWB and refit all the removed parts.

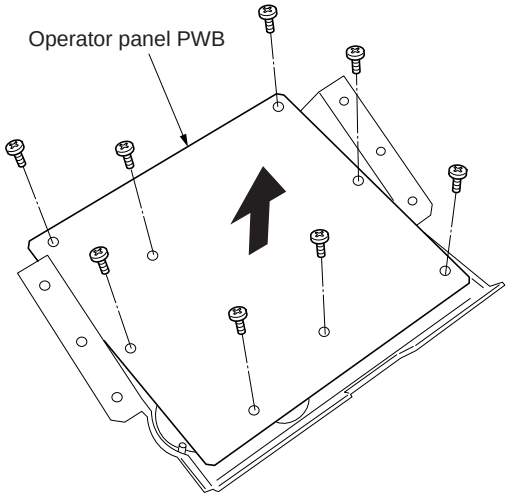

Figure 1-6-57

CONTENTS

1-7 Downloading printer firmware for upgrade

1-7-1 Downloading printer firmware for upgrade 1-7-1
(1) Format for the firmware files 1-7-1
(2) Downloading firmware via the parallel interface 1-7-2
(3) Downloading firmware using the memory card 1-7-3
(4) Downloading message data 1-7-5

1-7-1 Downloading printer firmware for upgrade

The system (program) and engine firmware that are stored in a system DIMM PWB and a flash ROM on the engine controller PWB are upgradable by downloading new firmware into these devices. Downloading can be made either by directly sending the new firmware from PC via the parallel interface or using a memory card that contains the new firmware.
The message data for the operator panel display is also downloadable so that a new message language is appended for the operator panel. The message data should be downloaded directly from PC.

(1) Format for the firmware files

The file name for the firmware files is coded so that it implies the type, applicable product, and the version of the file. Refer to the example below:

System firmware file name example

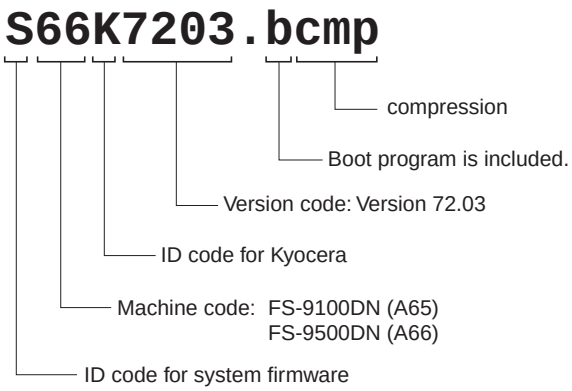

Engine firmware file name example

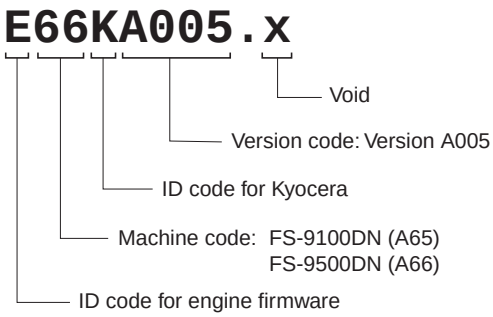

Operator panel message data file name example

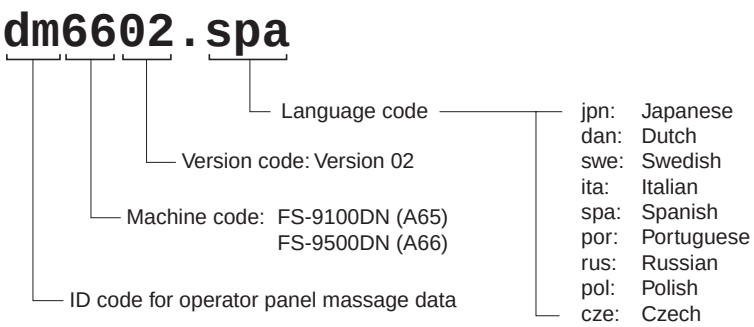

Table 1-7-1

(2) Downloading firmware via the parallel interface

To download the system or engine firmware using the parallel interface, use the procedure below. Note that you can download both the system and engine firmware at a time.

Connecting the parallel printer cable

1. Turn printer and PC power off.
2. Connect the parallel printer cable between the PC and the printer.

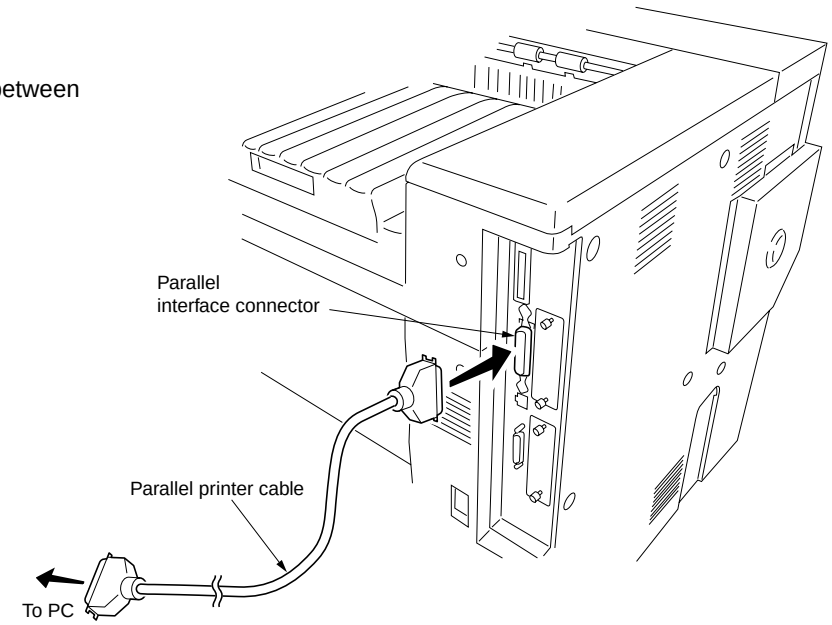

Figure 1-7-1

Downloading the firmware files

1. Turn printer power on.
2. Confirm Display ① is displayed.
3. At the DOS prompt, enter Command ②. Note that `UPGR'SYS'` should be entered as upper case letters.
4. Confirm Display ③ is displayed.
5. At the DOS prompt, enter Command ④ so that the system firmware (ex. `S66K7203.bcmp`) and the engine firmware (ex. `E66KA005.x`) are copied to the printer.
6. Display ⑤ is displayed during downloading. When Display ⑥ is displayed to indicate downloading is finished, turn printer power off, then on.
7. Confirm Display ⑦ is displayed after warming up.

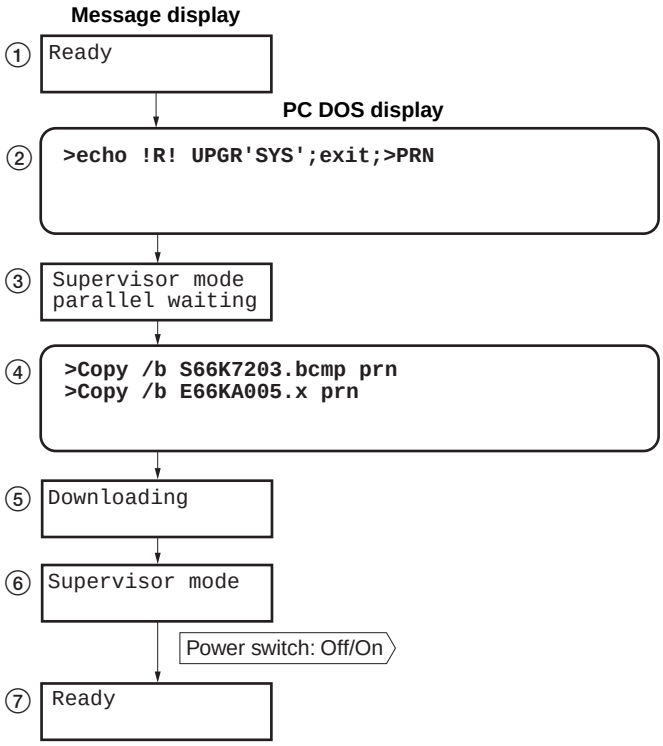

Figure 1-7-2

Confirming upgrading

1. Print a status page. (See page 1-4-2.)
2. Check that the status page shows the new firmware version.

(3) Downloading firmware using the memory card

The procedure below provides how to download firmware from a memory card. A memory card can hold both the system and the engine firmware together for downloading these firmware at a time.

Formatting the memory card

1. Turn printer power on.
2. Insert the memory card into the printer's memory card slot.

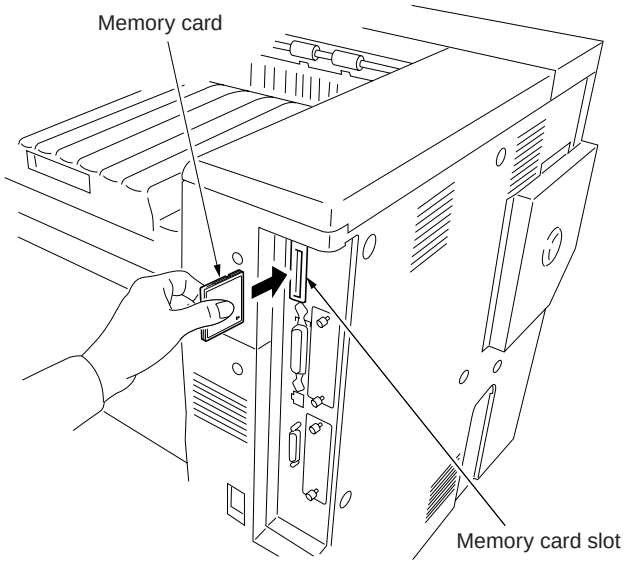

Figure 1-7-3

3. Press MENU key on the printer's operator panel and format the memory card (①).
4. When formatting is complete, turn printer power off.
5. Remove the formatted memory card from the printer.

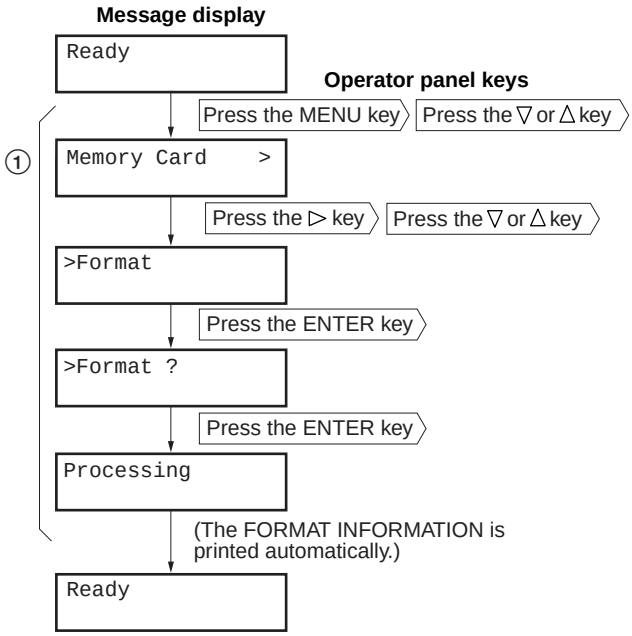

Figure 1-7-4

Copying firmware files to the memory card

1. Insert the memory card to the PC's slot or to the adaptor.
2. Copy the firmware file to download to the root directory of the memory card.
3. Remove the memory card from the PC or adaptor.

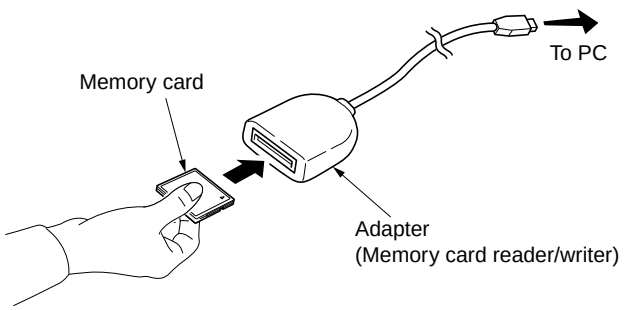

Figure 1-7-5

Downloading firmware file

1. Confirm that the printer's power switch is set to off.
2. Insert the memory card into the printer's memory card slot.

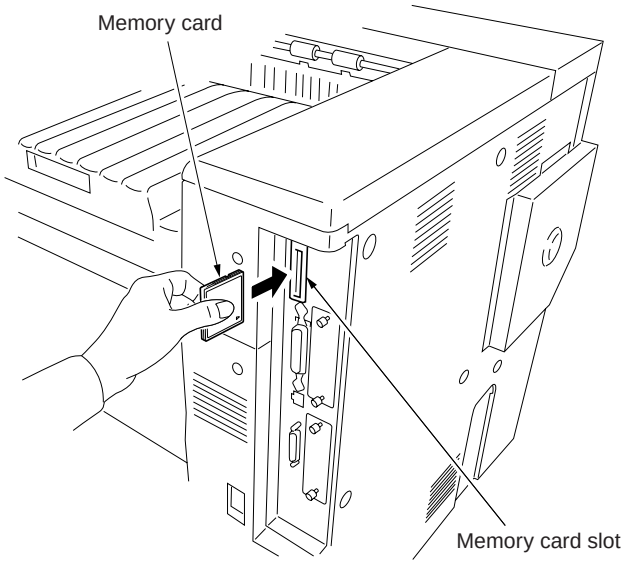

Figure 1-7-6

3. Turn printer power on. The firmware file in the memory card will be automatically downloaded.
4. Message ① is displayed during downloading. Confirm the display changes to Message ② which indicates downloading is complete and turn printer power off, then on.
5. Confirm Display ③ is displayed after warming up.

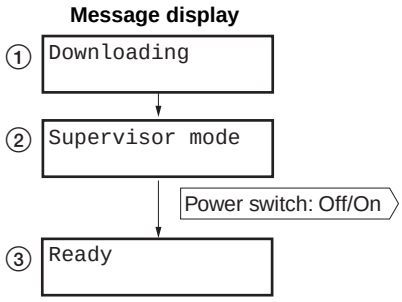

Figure 1-7-7

Confirming upgrading

1. Print a status page. (See page 1-4-2.)
2. Check that the status page shows the new firmware version.

(4) Downloading message data

To download the new message data for the display, proceed as follows:

Connecting the parallel printer cable

1. Turn printer and PC power off.
2. Connect the parallel printer cable between the PC and the printer.

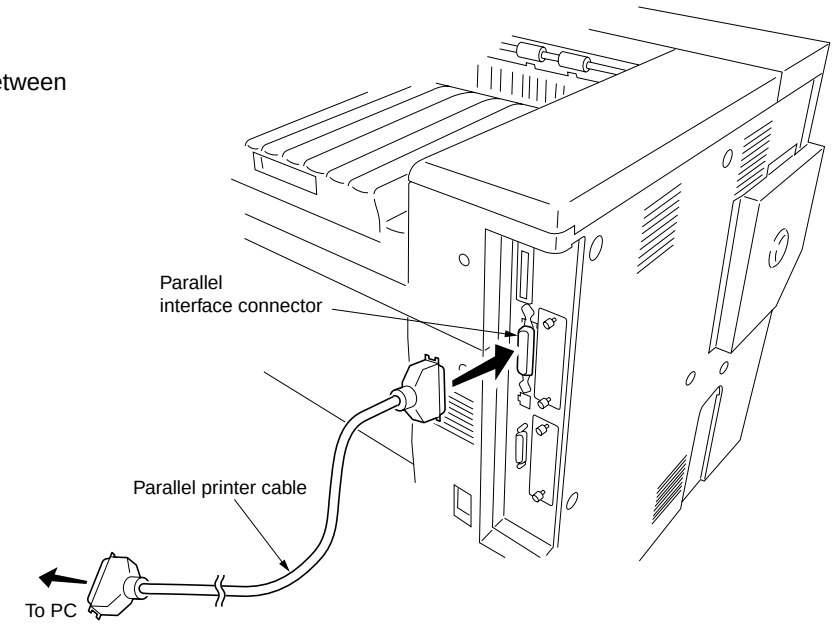

Figure 1-7-8

Downloading the message data file

1. Turn printer power on.
2. Confirm Display ① is displayed.
3. At the DOS prompt, enter Command ②. Note that `BOOT'SPR'` should be entered as upper case letters.
4. Confirm Display ③ is displayed.
5. At the DOS prompt, enter Command ④ so that the message data file (ex. `dm6602.spa`) is copied to the printer.
6. Display ⑤ is displayed during downloading. When Display ⑥ is displayed to indicate downloading is finished, turn printer power off, then on.
7. Confirm Display ⑦ is displayed after warming up.

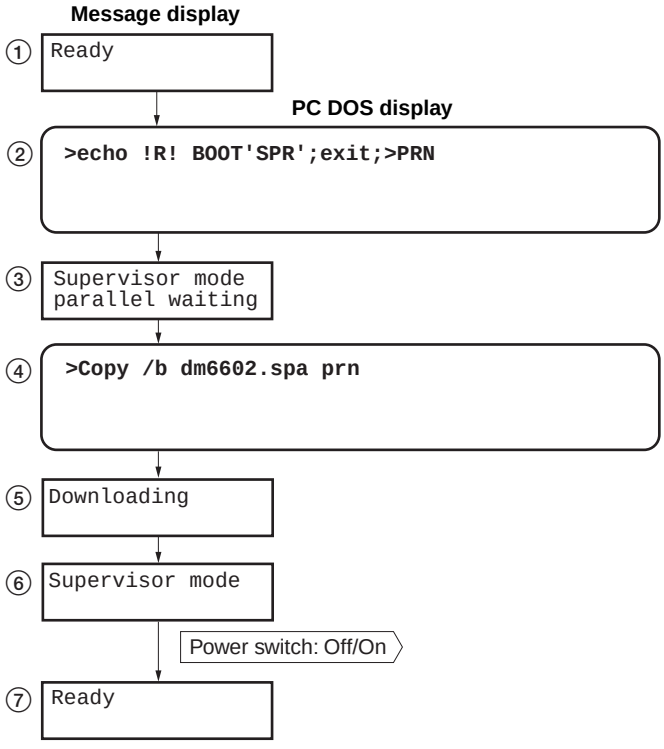

Figure 1-7-9

Confirming upgrading

1. Print a status page. (See page 1-4-2.)
2. Check that the status page shows the new message data version.

CONTENTS

2-1 Mechanical construction

2-1-1 Paper feed section 2-1-1
2-1-2 Main charging section 2-1-5
2-1-3 Laser scanner unit 2-1-7
(1) Laser scanner unit 2-1-7
2-1-4 Developing section 2-1-10
(1) Formation of magnetic brush 2-1-11
(2) Computing the absolute humidity 2-1-12
2-1-5 Transfer and separation sections 2-1-13
2-1-6 Cleaning and charge erasing sections 2-1-15
2-1-7 Fuser section 2-1-16
2-1-8 Eject and switchback sections 2-1-18
2-1-9 Duplex unit 2-1-20
(1) Paper conveying operation in duplex printing 2-1-21

2-1-1 Paper feed section

The paper feed section consists of the primary feed and secondary feed subsections. Primary feed conveys paper from the upper cassette, lower cassette or MP tray to the left and right registration rollers, at which point secondary feed takes place and the paper travels to the transfer section in sync with the printing timing.

Each cassette consists of a lift driven by the lift motor and other components. Each cassette can hold up to 500 sheets of paper. Paper is fed from the cassette by the rotation of the forwarding pulley and paper feed pulley. The separation pulley prevents multiple sheets from being fed at one time, via the torque limiter.

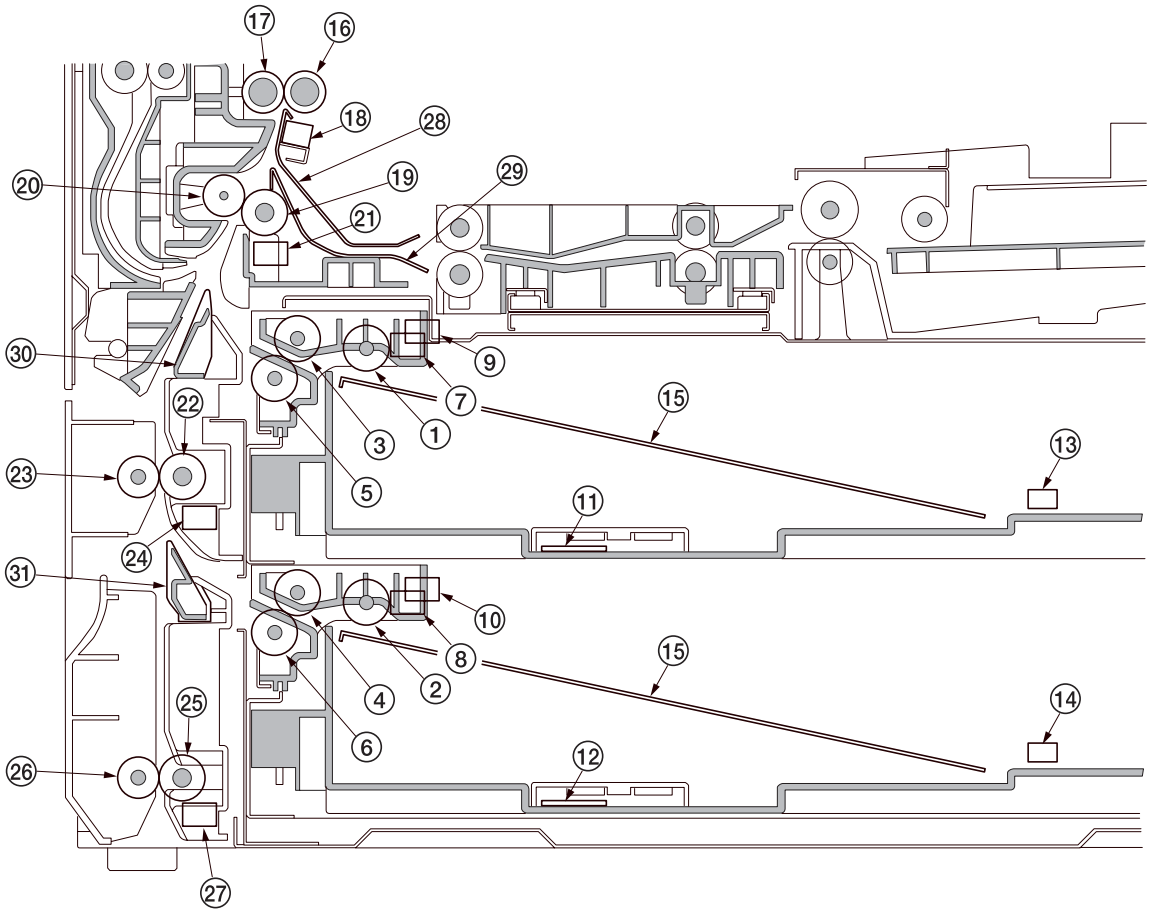

Figure 2-1-1 Paper feed from the upper and lower cassettes

① Upper forwarding pulley
② Lower forwarding pulley
③ Upper paper feed pulley
④ Lower paper feed pulley
⑤ Upper separation pulley
⑥ Lower separation pulley
⑦ Upper paper switch (PSW-U)
⑧ Lower paper switch (PSW-L)
⑨ Upper lift limit switch (LICSW-U)
⑩ Lower lift limit switch (LICSW-L)
⑪ Upper paper width switch (PWSW-U)
⑫ Lower paper width switch (PWSW-L)
⑬ Upper paper length switch (PLSW-U)
⑭ Lower paper length switch (PLSW-L)
⑮ Cassette lift
⑯ Right registration roller
⑰ Left registration roller
⑱ Registration switch (RSW)
⑲ Feed roller 1
⑳ Feed pulley
㉑ Feed switch 1 (FSW1)
㉒ Feed roller 2
㉓ Feed pulley
㉔ Feed switch 2 (FSW2)
㉕ Feed roller 3
㉖ Feed pulley
㉗ Feed switch 3 (FSW3)
㉘ Front registration guide
㉙ Paper conveying guide
㉚ Vertical paper conveying guide 1
㉛ Vertical paper conveying guide 2

The MP tray can be hold up to 200 sheets of paper at one time. Paper is fed from the MP tray by the rotation of the MP forwarding pulley and MP paper feed pulley. Also during paper feed, the MP separation pulley prevents multiple sheets from being fed at one time by the torque limiter.

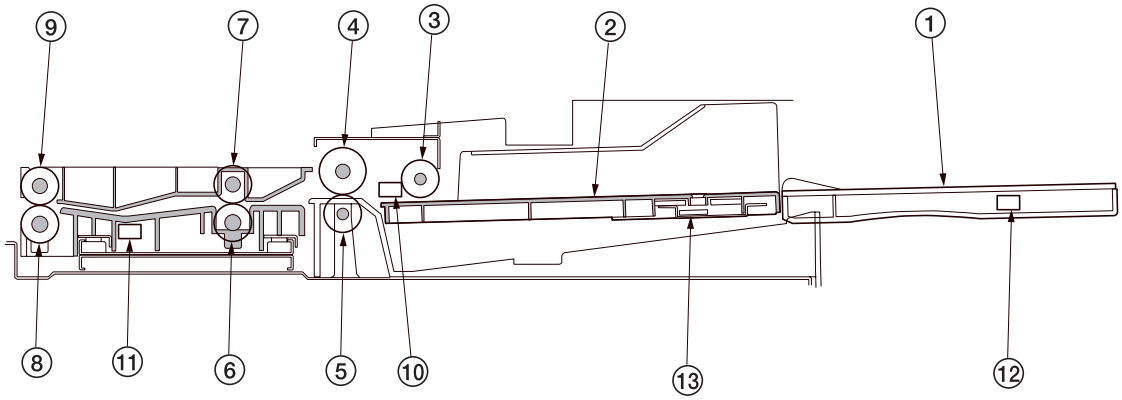

Figure 2-1-2 Paper feed from the MP tray

① MP table
② MP lift guide
③ MP forwarding pulley
④ MP paper feed pulley
⑤ MP separation pulley
⑥ MP feed roller 1
⑦ MP feed pulley
⑧ MP feed roller 2
⑨ MP feed pulley
⑩ MP paper switch (MPPSW)
⑪ MP feed switch (MPFSW)
⑫ MP paper length switch (MPPLSW)
⑬ MP paper width switch (MPPWSW)

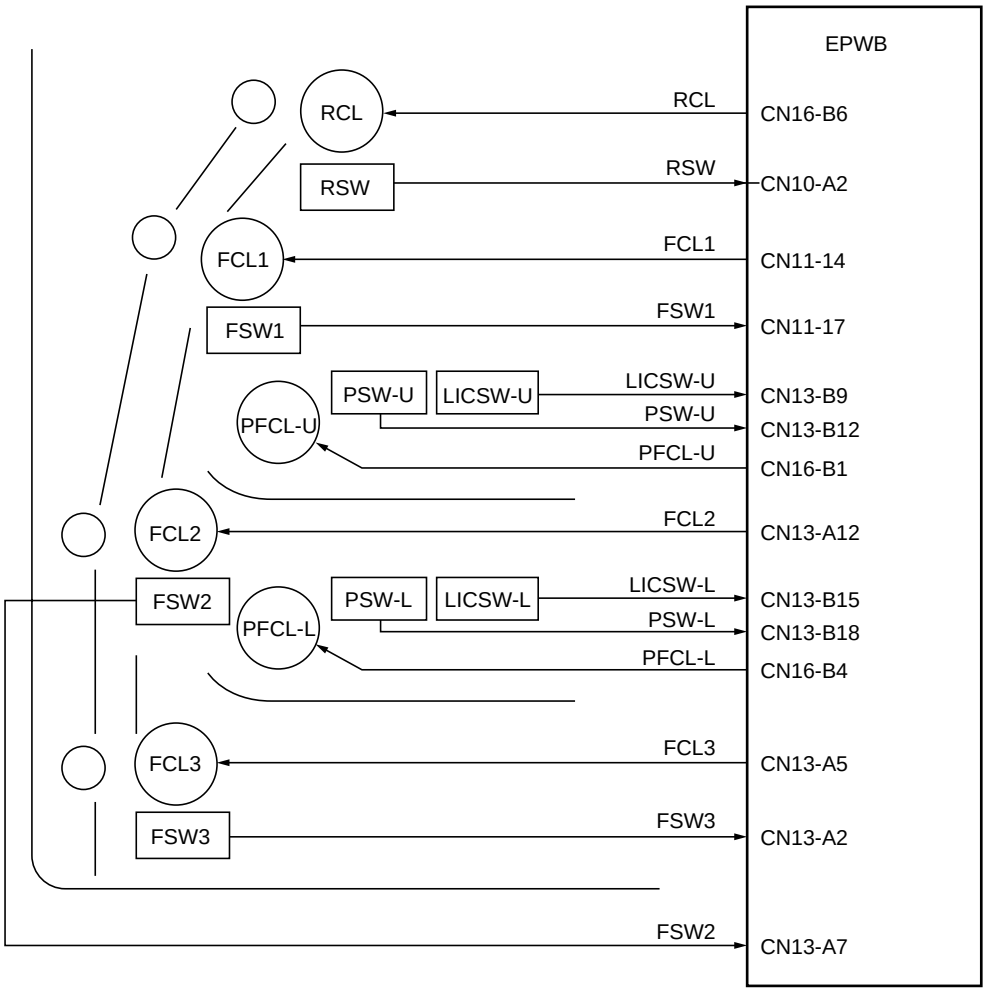

Figure 2-1-3 Paper feed section block diagram (upper and lower cassettes)

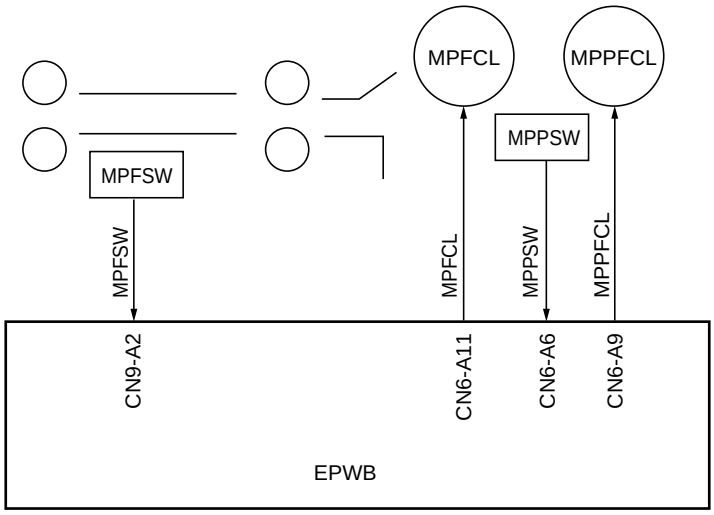

Figure 2-1-4 Paper feed section block diagram (MP table)

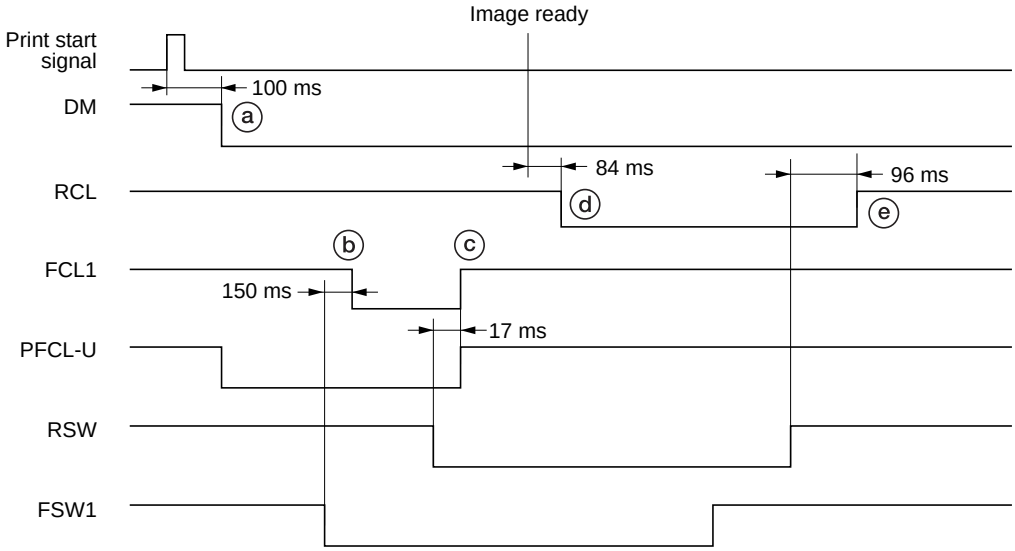

Timing chart 2-1-1 Paper feed from the upper cassette

ⓐ: 100 ms after the start key is pressed, the drive motor (DM) turns on to start the drive for the paper feed section. At the same time, the upper paper feed clutch (PFCL-U) turns on, and the forwarding and paper feed pulleys rotate to start primary paper feed.
ⓑ: 150 ms after the leading edge of the paper turns the feed switch 1 (FSW1) on, the feed clutch 1 (FCL1) turns on and the feed roller 1 rotates.
ⓒ: 17 ms after the leading edge of the paper turns the registration switch (RSW) on, the upper paper feed clutch (PFCL-U) and feed clutch 1 (FCL1) turn off.
ⓓ: 84 ms after image ready signal turns on, the registration clutch (RCL) turns on, and the right registration roller rotates to start secondary paper feed. At the same time, feed clutch 1 (FCL1) turns on for 30 ms.
ⓔ: 96 ms after the trailing edge of the paper turns the registration switch (RSW) off, the registration clutch (RCL) turns off.

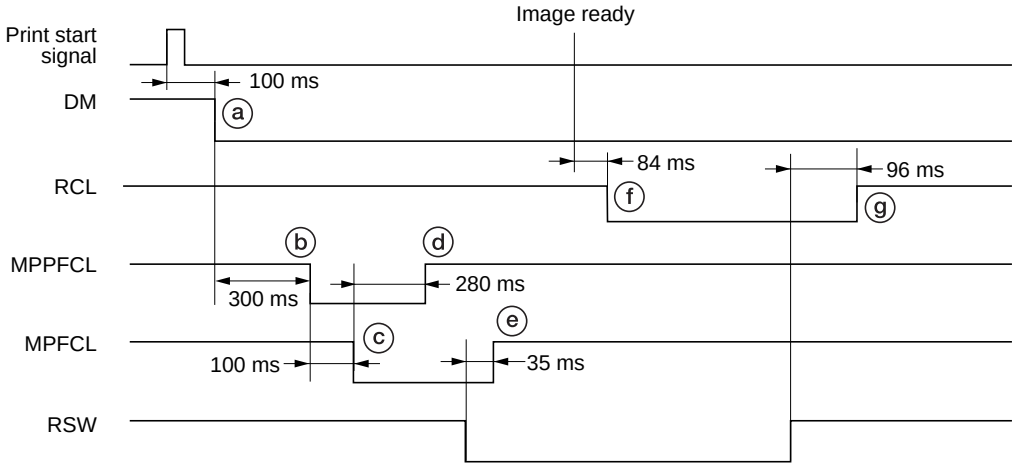

Timing chart 2-1-2 Paper feed from the MP tray

ⓐ: 100 ms after the start key is pressed, the drive motor (DM) turns on to start the drive for the paper feed section.
ⓑ: 300 ms after the drive motor (DM) turns on, the MP paper feed clutch (MPPFCL) turns on.
ⓒ: 100 ms after the MP paper feed clutch (MPPFCL) turns on, the MP feed clutch (MPFCL) turns on.
ⓓ: 280 ms after the MP feed clutch (MPFCL) turns on, the MP paper feed clutch (MPPFCL) turns off.
ⓔ: 35 ms after the registration switch (RSW) turns on, the MP feed clutch (MPFCL) turns off.
ⓕ: 84 ms after image ready signal turns on, the registration clutch (RCL) turns on, and the right registration roller rotates to start secondary paper feed.
ⓖ: 96 ms after the trailing edge of the paper turns the registration switch (RSW) off, the registration clutch (RCL) turns off.

2-1-2 Main charging section

The main charging section consists of the main charger assembly, drum and so on. The drum is electrically charged uniformly by means of a grid to form a latent image on the surface.
The main charger unit charges the drum so that a latent image is formed on the surface, the shield grid ensuring the charge is applied uniformly.

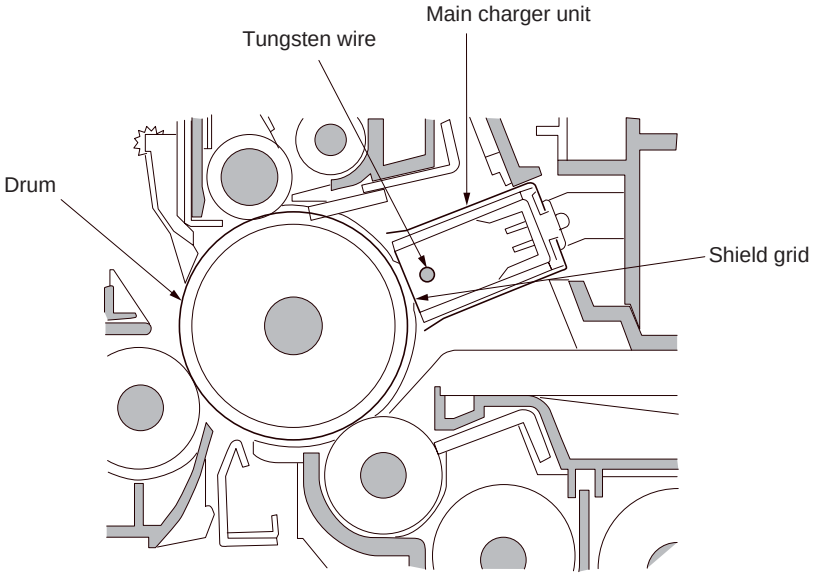

Figure 2-1-5 Main charging section

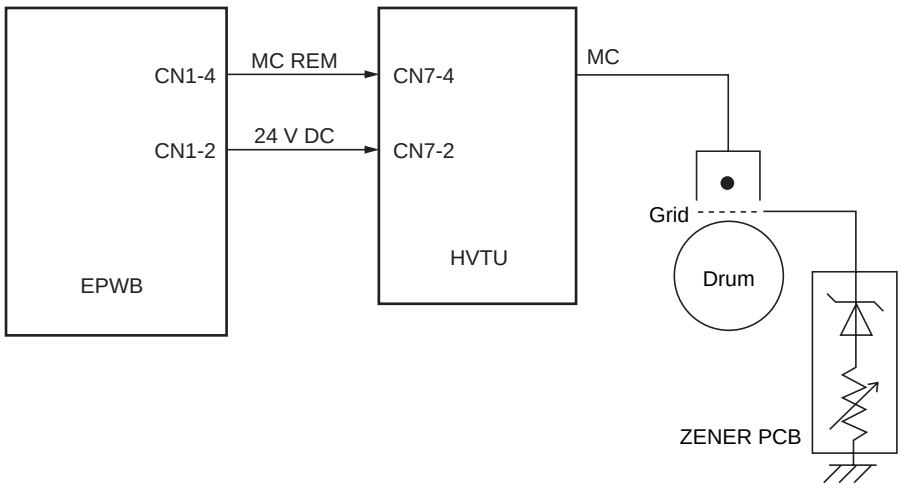

Figure 2-1-6 Main charging section block diagram

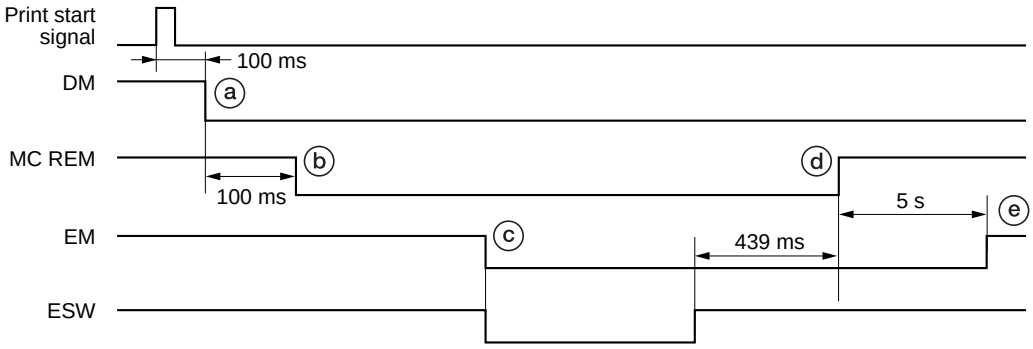

Timing chart 2-1-3 Main charging section operation

ⓐ: 100 ms after the start key is pressed, the drive motor (DM) turns on.
ⓑ: 100 ms after the drive motor (DM) turns on, main charging (MC REM) starts.
ⓒ: The leading edge of the paper turns on the eject switch (ESW), and at the same time the eject motor (EM) turns on.
ⓓ: 439 ms after the paper is ejected and the eject switch (ESW) turns off, main charging (MC REM) ends.
ⓔ: 5 s after the end of main charging (MC REM), the eject motor (EM) turns off.

2-1-3 Laser scanner unit

(1) Laser scanner unit

The image data scanned by the CCDPWB (CCDPWB) is processed on the main controller PWB (MPWB) and transmitted as image printing data to the laser scanner unit (LSU). By repeatedly turning the laser on and off, the laser scanner unit forms a latent image on the drum surface.

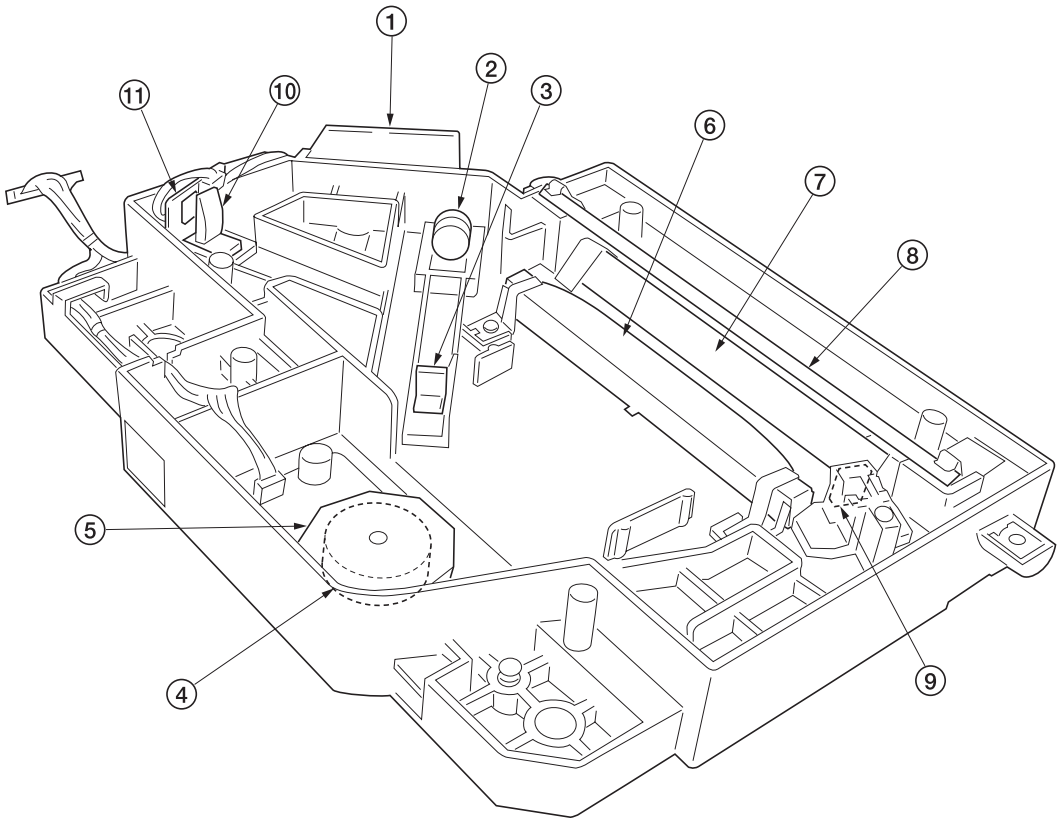

Figure 2-1-7 Laser scanner unit (1)

① Laser diode PWB (LDPWB)
② Collimator lens
③ Cylindrical lens
④ Polygon motor (PM)
⑤ Polygon mirror
⑥ Fϑ lens
⑦ Mirror
⑧ Mirror
⑨ BD sensor mirror
⑩ Cylindrical correcting lens
⑪ BD sensor

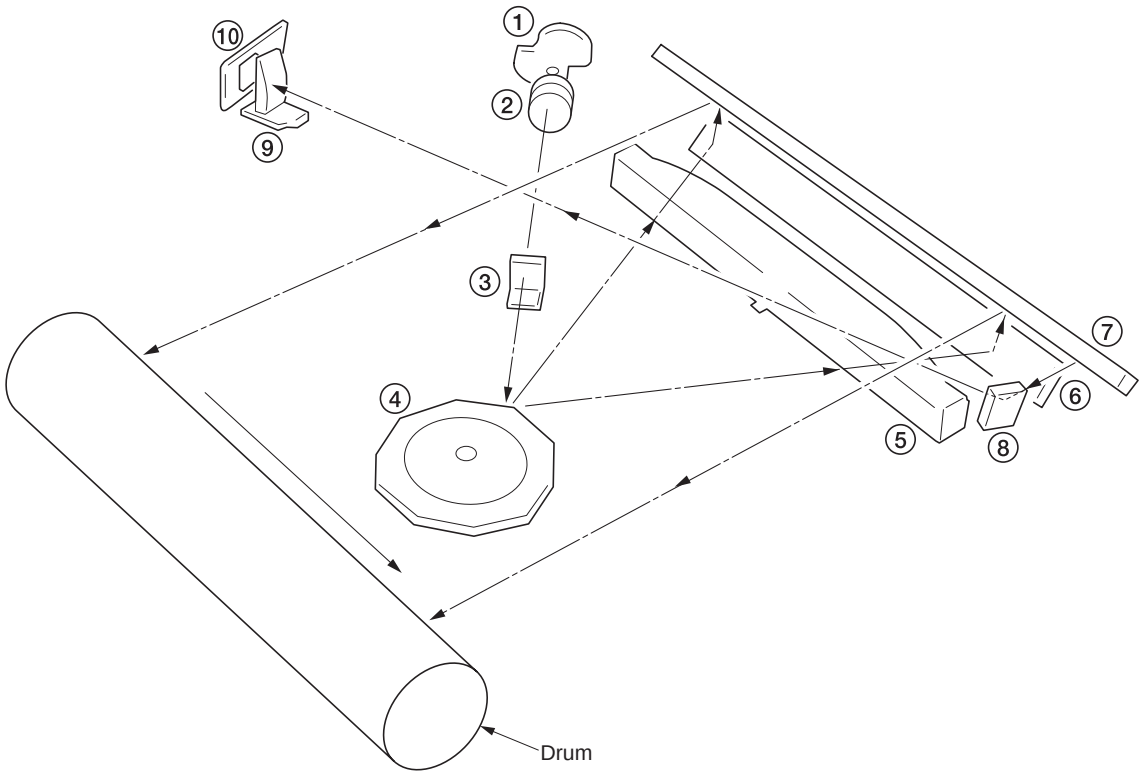

Figure 2-1-8 Laser scanner unit (2)

① Laser diode: Generates the laser beam which forms a latent image on the drum.
② Collimator lens: Collimates the diffused laser beam emitted from the laser diode to convert it into a cylindrical beam.
③ Cylindrical lens: Shapes the collimated laser beam to suit the printing resolution.
④ Polygon mirror: Nine-facet mirror that rotates at approximately 28031/36220 (FS-9100DN/9500DN) rpm with each face reflecting the laser beam toward the drum for one main-direction scan.
⑤ Fϑ lens: Corrects for non-linearity of the laser beam scanning speed on the drum surface, keeps the beam diameter constant and corrects for the vertical alignment of the polygon mirror to ensure that the focal plane of the laser beam is on the drum surface.
⑥ Mirror: Reflects the laser beam and changes the irradiation direction.
⑦ Mirror: Reflects the laser beam and changes the irradiation direction.
⑧ BD sensor mirror: Reflects the laser beam to the BD sensor to generate the main-direction (horizontal) sync signal.
⑨ Cylindrical correcting lens: Corrects for the deviation of the laser beam reflected by the BD sensor mirror to the BD sensor.
⑩ BD sensor: Detects the beam reflected by the BD sensor mirror, outputting a signal to the engine controller PWB (EPWB) to provide timing for the main-direction sync signal.

The dimensions of the laser beam are as shown in Figure 2-1-9.

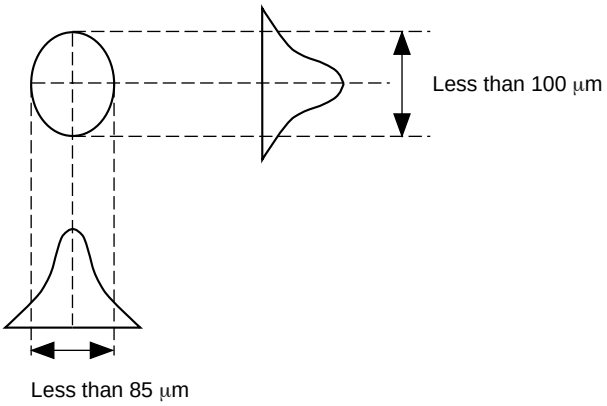

Figure 2-1-9

Scanning in the main direction is provided by the rotating polygon mirror, while scanning in the auxiliary direction is provided by the rotating drum, forming a static latent image on the drum.
The static latent image of the letter “A”, for example, is formed on the drum surface as shown in Figure 2-1-10. Electrical charge is dissipated on the area of the drum surface irradiated by the laser.
The focal point of the laser beam is moved line by line, and adjacent lines slightly overlap each other.

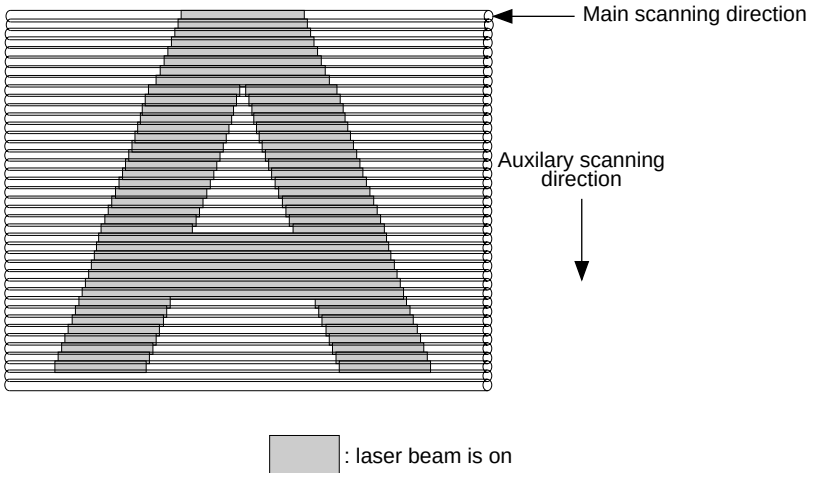

Figure 2-1-10

2-1-4 Developing section

The developing section consists of the developing unit and the toner container.
The developing unit consists of the developing roller where a magnetic brush is formed, the doctor blade and the developing spirals that agitate the toner.
When the toner sensor (TNS) detects a low toner level in the developing unit, the toner replenishment signal is output to the engine controller PWB (EPWB). The engine controller PWB (EPWB) that has received the signal turns on the toner replenishment solenoid (TNFSOL) and replenishes toner from the toner container to the developing unit.
Also, the toner container sensor (TCS) checks whether or not toner remains in the toner container.

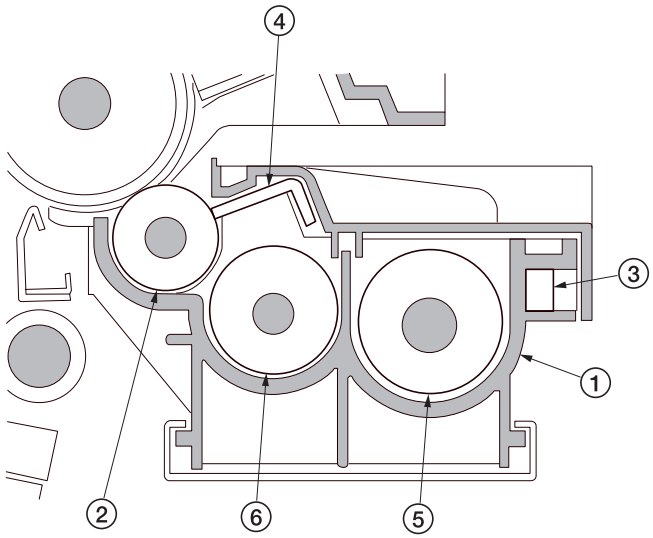

① Developing unit housing
② Developing roller
③ Toner sensor (TNS)
④ Doctor blade
⑤ Right developing spiral
⑥ Left developing spiral

Figure 2-1-11 Developing section

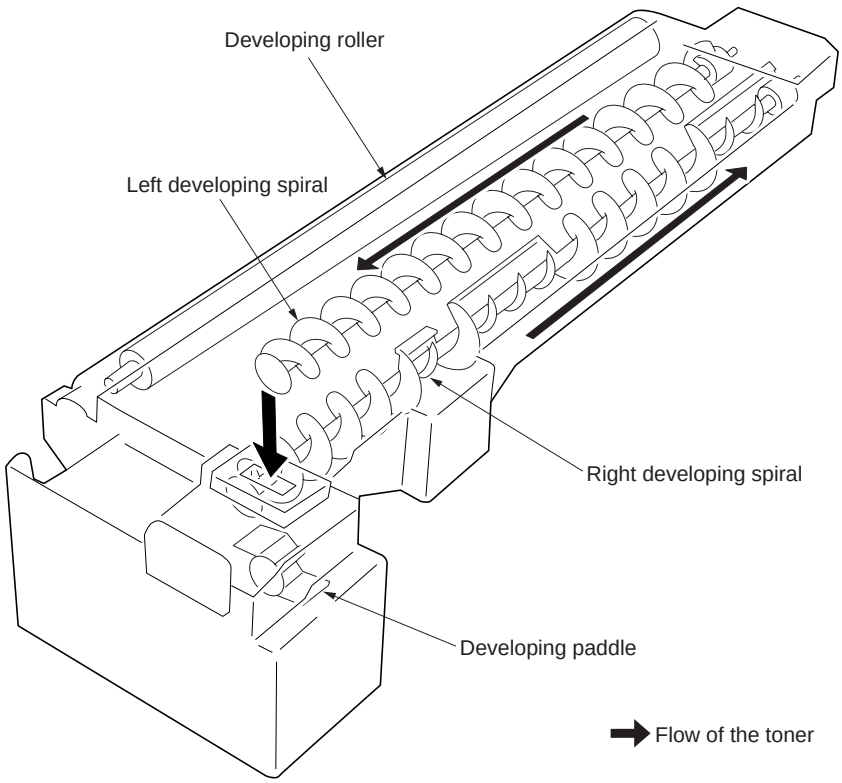

Figure 2-1-12 Flow of the toner

(1) Formation of magnetic brush

The developing roller consists of a magnet roller with four poles and a sleeve roller. Rotation of the sleeve roller around the magnet roller entrains toner, which in turn forms a magnetic brush at pole N1 on the magnet roller. The height of the magnetic brush is regulated by the doctor blade; the developing result is affected by the position of the poles on the magnet roller and the position of the doctor blade.
A developing bias voltage generated by the high-voltage transformer unit (HVTU) is applied to the developing roller to provide image contrast.

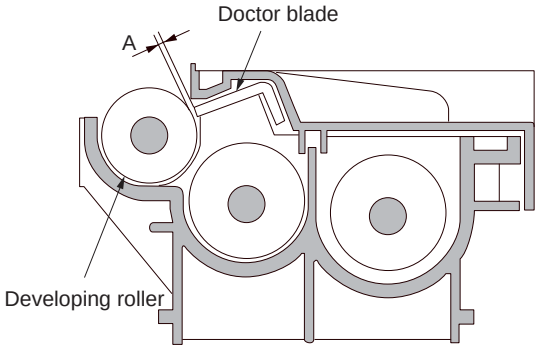

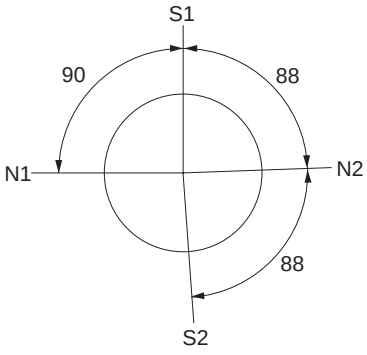

A: Distance between the doctor blade and developng roller; 0.23 to 0.35 mm

N1:870 × 10^{-4}T
N2:420 × 10^{-4}T
S1:700 × 10^{-4}T
S2:910 × 10^{-4}T

Figure 2-1-13 Forming a magnetic brush

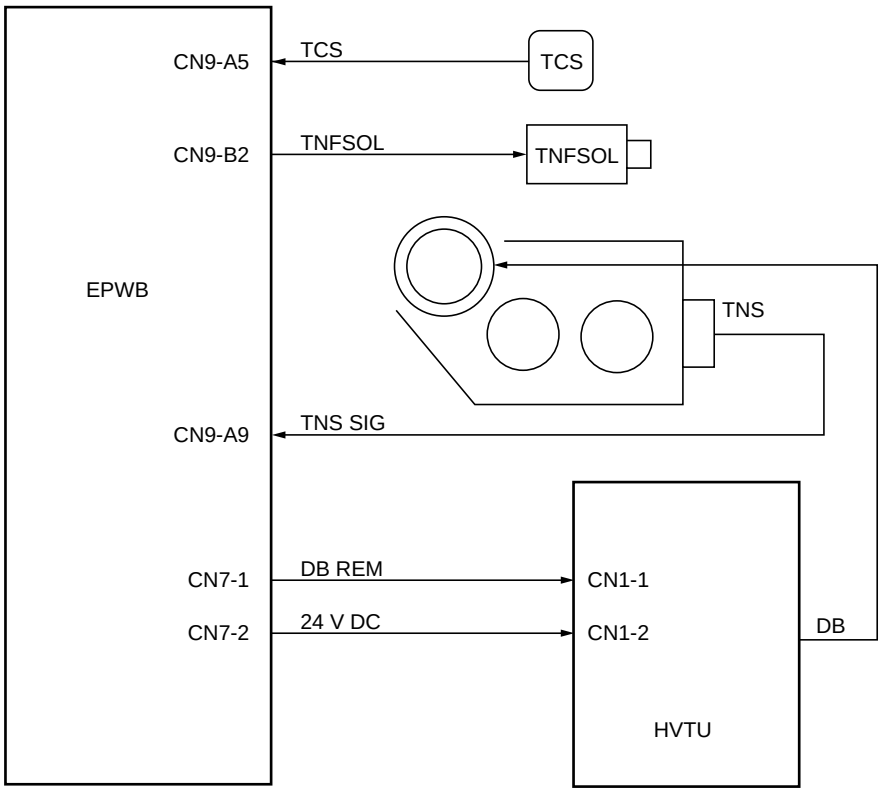

Figure 2-1-14 Developing section block diagram

(2) Computing the absolute humidity
The humidity sensor (HUMSENS) converts the relative humidity detected by the humidity sensing element into a voltage and sends it to the engine controller PWB (EPWB). The engine controller PWB (EPWB) computes the absolute humidity based on this HUMSENS signal and the temperature (ETTH signal) detected by the external temperature thermistor (ETTH).

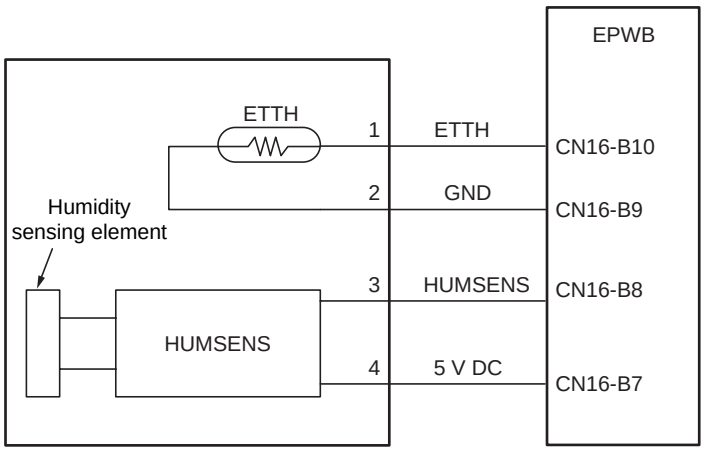

Figure 2-1-15 Absolute humidity computation block diagram

2-1-5 Transfer and separation sections

The transfer and separation section consists mainly of the transfer roller, separation electrode and drum separation claws.
A high voltage generated by the high-voltage transformer unit (HVTU) is applied to the transfer roller for transfer charging.
Paper after transfer is separated from the drum by applying separation bias that is output from the high-voltage transformer unit (HVTU) to the separation electrode.

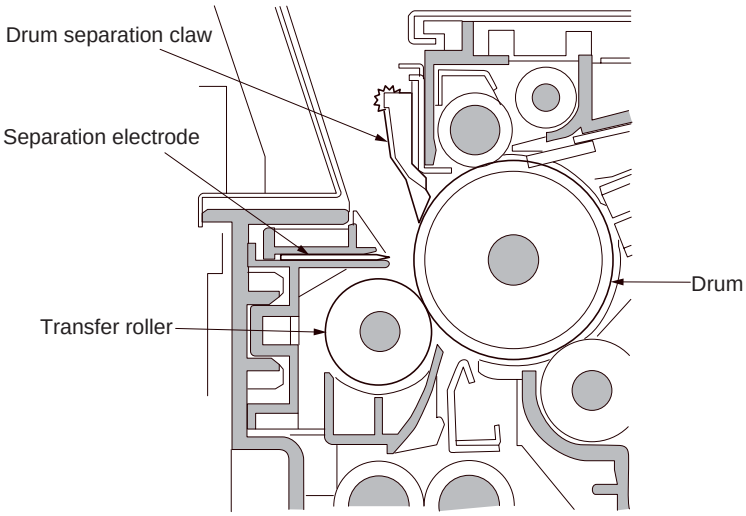

Figure 2-1-16 Transfer and separation sections

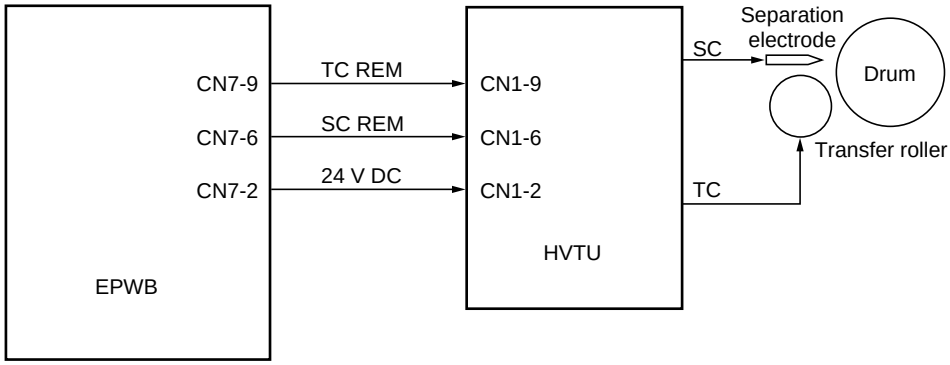

Figure 2-1-17 Transfer and separation sections block diagram

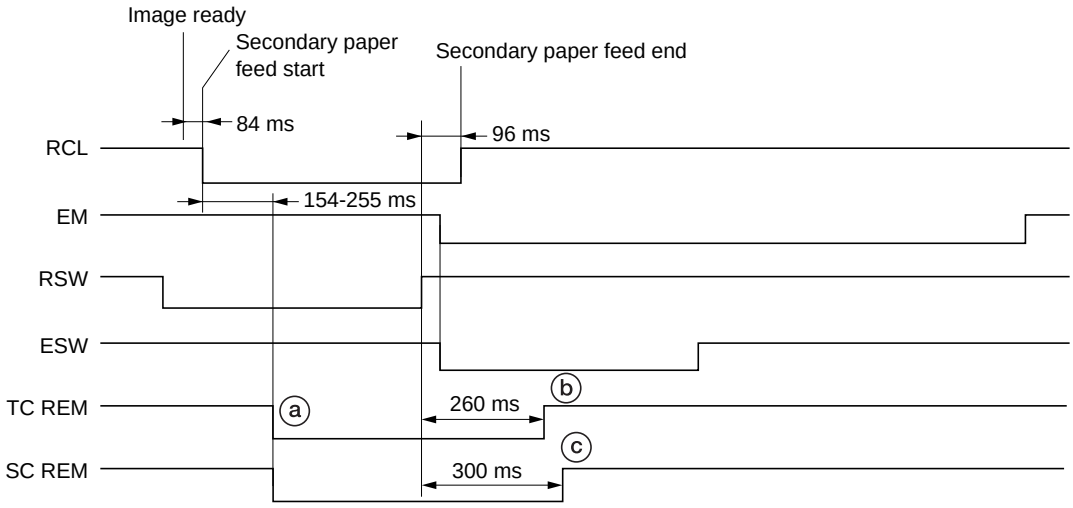

Timing chart 2-1-4 Transfer and separation sections operation

ⓐ: 154 to 255 ms after the registration clutch (RCL) turns on to start secondary paper feed, transfer charging (TC REM) and separation bias (SC REM) starts.
ⓑ: 260 ms after the trailing edge of the paper turns the registration switch (RSW) off, transfer charging (TC REM) ends.
ⓒ: 300 ms after the trailing edge of the paper turns the registration switch (RSW) off, separation bias (SC REM) ends.

2-1-6 Cleaning and charge erasing sections

The cleaning section consists of the cleaning blade that removes residual toner from the drum surface after the transfer process, and the cleaning spiral that carries the residual toner back to the waste toner bottle.
The cleaning lamp (CL) consists of LEDs and removes residual charge on the drum before main charging.
Also the toner quantity in the waste toner bottle is sensed with the overflow sensor (OFS).

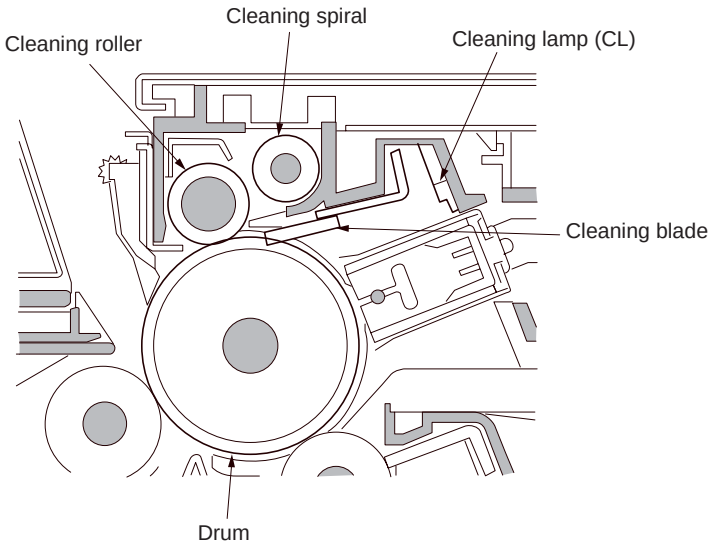

Figure 2-1-18 Cleaning and charge erasing sections

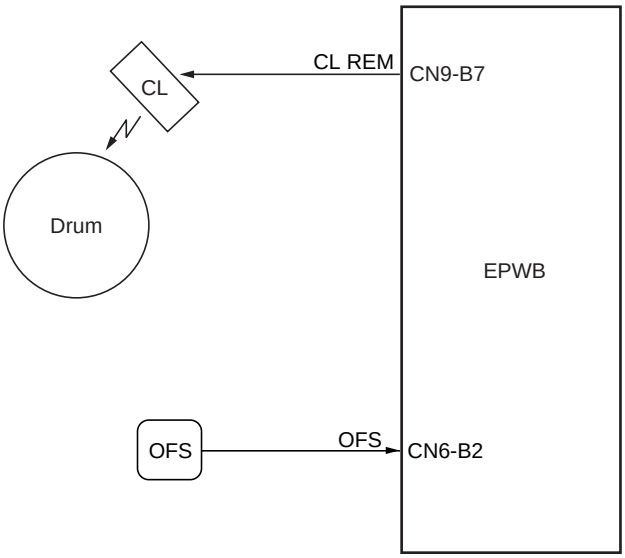

Figure 2-1-19 Cleaning and charge erasing sections block diagram

2-1-7 Fuser section

The fuser section consists of the parts shown in Figure 2-1-22. When paper reaches the fuser section after the transfer process, it passes between the press roller and heat roller, which is heated by fuser heaters M or S (FH-M or FH-S). Pressure is applied by the fuser unit pressure springs so that the toner on the paper is melted, fused and fixed onto the paper. The heat roller is heated by fuser heaters M or S (FH-M or FH-S) inside it; its surface temperature is detected by the fuser unit thermistor (FTH) and is regulated by the fuser heaters turning on and off.
If the fuser section becomes abnormally hot, fuser unit thermostat (FTS) operates shutting the power to the fuser heaters off. When the fuser process is completed, the paper is separated from the heat roller by its separation claws and is conveyed from the printer to eject and switchback section.

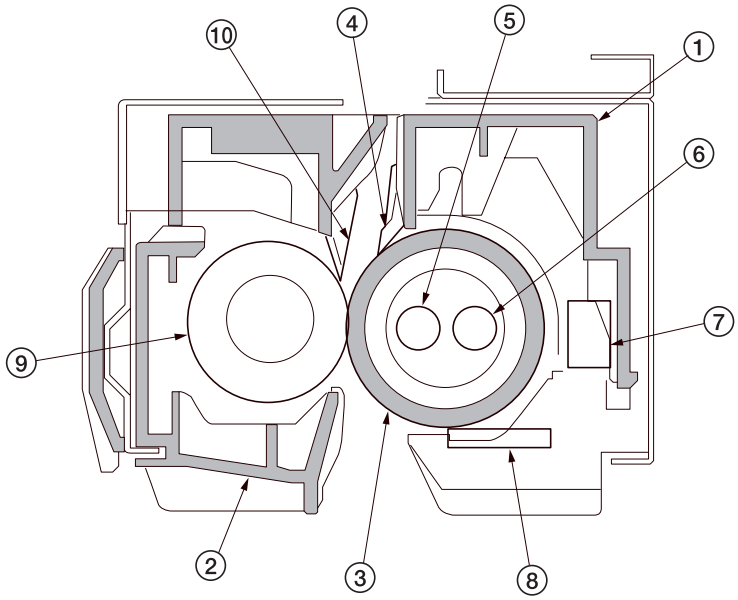

① Upper fuser unit cover
② Fuser housing
③ Heat roller
④ Heat roller separation claw
⑤ Fuser heater M (FH-M)
⑥ Fuser heater S (FH-S)
⑦ Fuser unit thermostat (FTS)
⑧ Fuser unit thermistor (FTH)
⑨ Press roller
⑩ Press roller separation claw

Figure 2-1-20 Fuser section

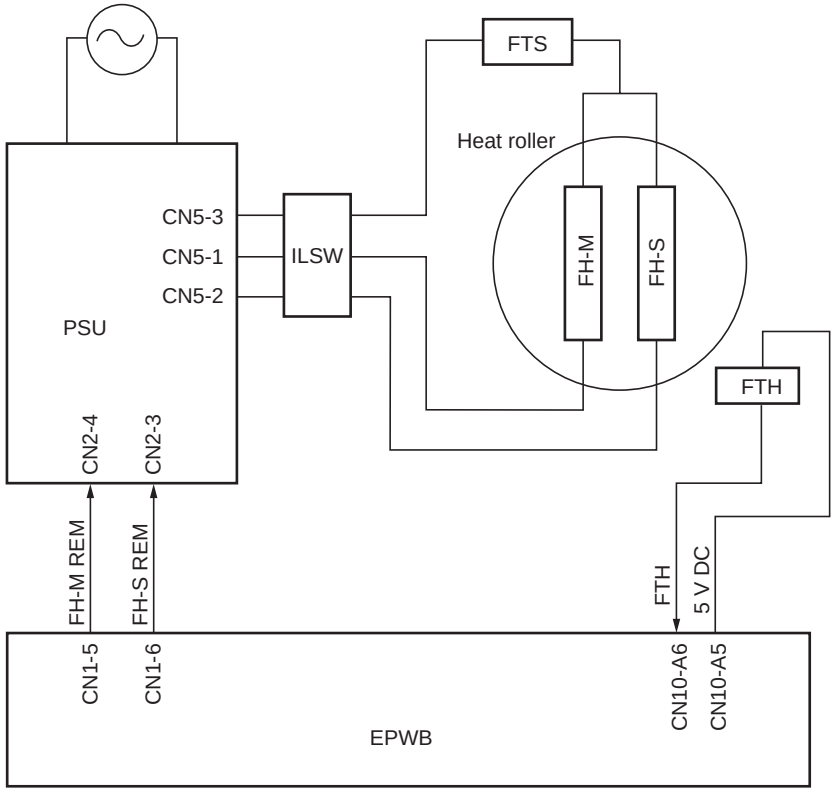

Figure 2-1-21 Fuser section block diagram

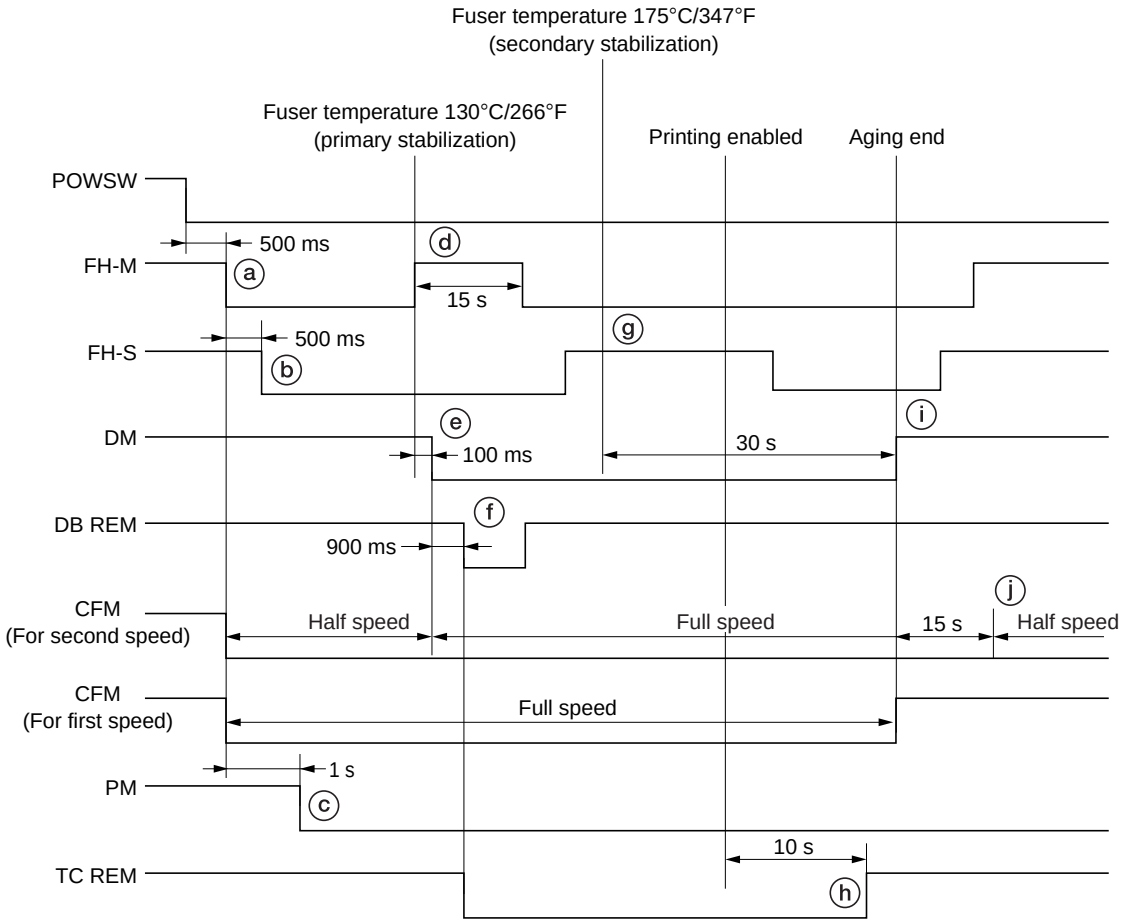

Timing chart 2-1-5 Fuser section operation

ⓐ: 500 ms after the power switch (POWSW) is turned on, fuser heater M (FH-M) turns on to heat the heat roller. At the same time, cooling fan motor (CFM) turns on.
* The fan motor for second speed rotates at half speed and the motor for first speed rotates at full speed.
ⓑ: 500 ms after fuser heater M (FH-M) turns on, fuser heater S (FH-S) turns on.
ⓒ: 1 s after fuser heater M (FH-M) turns on, the polygon motor (PM) of the laser scanner unit turns on.
ⓓ: When the fuser temperature reaches 130 °C/266 °F, the printer enters primary stabilization, and fuser heater M (FH-M) turns off temporarily and turns on again after 15 s.
ⓔ: 100 ms after the primary stabilization, the drive motor (DM) turns on. Also the cooling fan motor (for second speed) switches to full speed rotation.
ⓕ: 900 ms after the drive motor (DM) turns on, the developing bias (DB REM) turns on and at the same time transfer charging (TC REM) starts.
ⓖ: When the fuser temperature reaches 175°C/347°F, the printer enters secondary stabilization. Fuser heaters M and S (FH-M and FH-S) are turned on and off to keep the fuser temperature at 175°C/347°F and aging starts.
ⓗ: 10 s after printing is enabled, transfer charging (TC REM) ends.
ⓘ: 30 s after the secondary stabilization, the drive motor (DM) turns off and the aging ends.
ⓙ: 15 s after the drive motor (DM) turns off, the cooling fan motor (for second speed) switches to half speed rotation.

2-1-8 Eject and switchback sections

The eject and switchback sections eject paper on which fuser has ended with the eject roller that is rotated by forward rotation of the eject motor.
In duplex printing, paper is turned over by reverse rotation of the eject motor.
The paper full sensor (PFS) detects the full conditions of paper ejected onto the face-down tray.

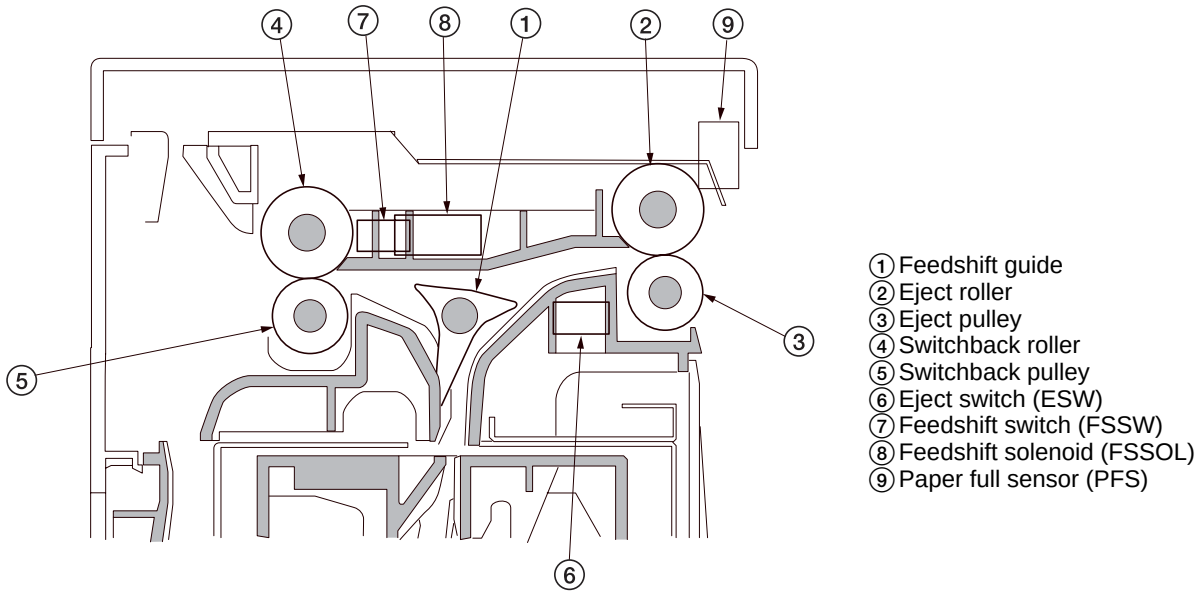

Figure 2-1-22 Eject and switchback sections

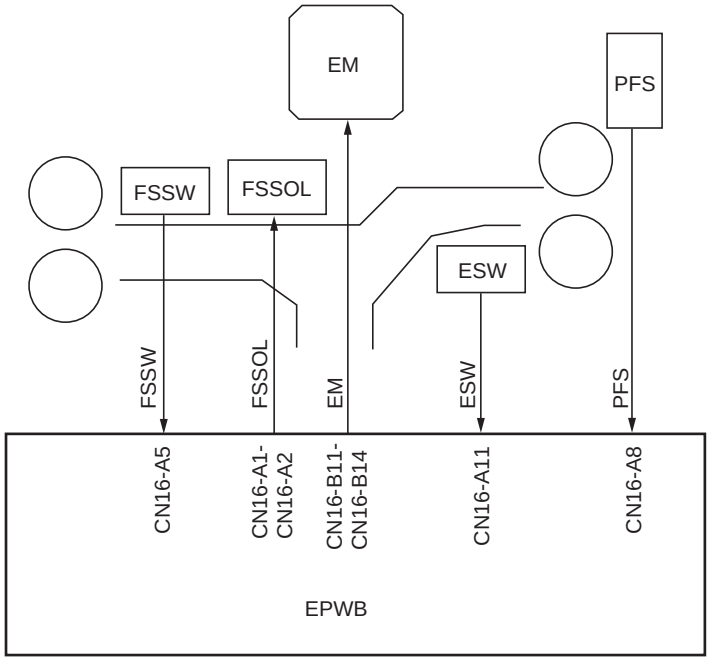

Figure 2-1-23 Eject and switchback sections block diagram

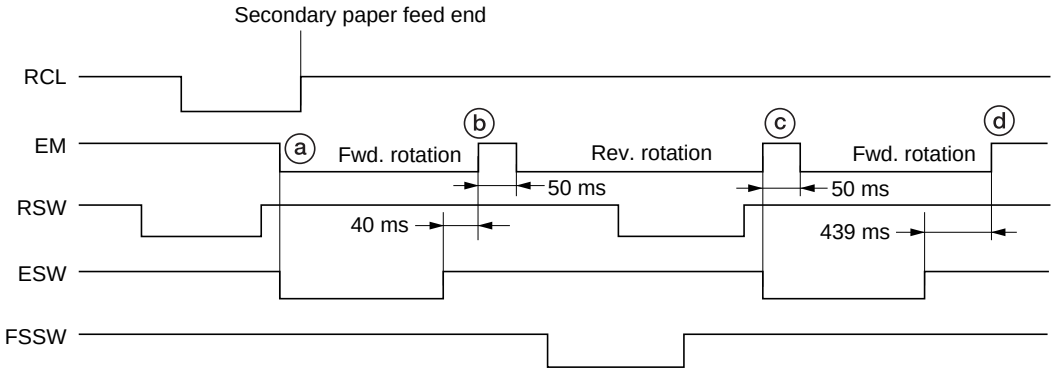

Timing chart 2-1-7 Eject and switchback sections operation

ⓐ: The leading edge of paper (front face) turns on the eject switch (ESW), and at the same time the eject motor (EM) starts forward rotation.
ⓑ: 40 ms after passing of the trailing edge of paper turns off the eject switch (ESW), the eject motor (EM) turns off for 50 ms and then starts reverse rotation.
ⓒ: The leading edge of paper (reverse face) turns on the eject switch (ESW), and at the same time the eject motor (EM) turns off for 50 ms and then starts forward rotation.
ⓓ: 439 ms after passing of the trailing edge of the paper turns off the eject switch (ESW), the eject motor (EM) turns off.

2-1-9 Duplex unit

The duplex unit consists of the components shown in Figure 2-1-24. In duplex mode, after printing on to the reverse face of the paper, the paper is reversed in the switchback section and conveyed to the duplex unit. The paper is then conveyed to the printer paper feed section by the upper and lower duplex feed rollers.

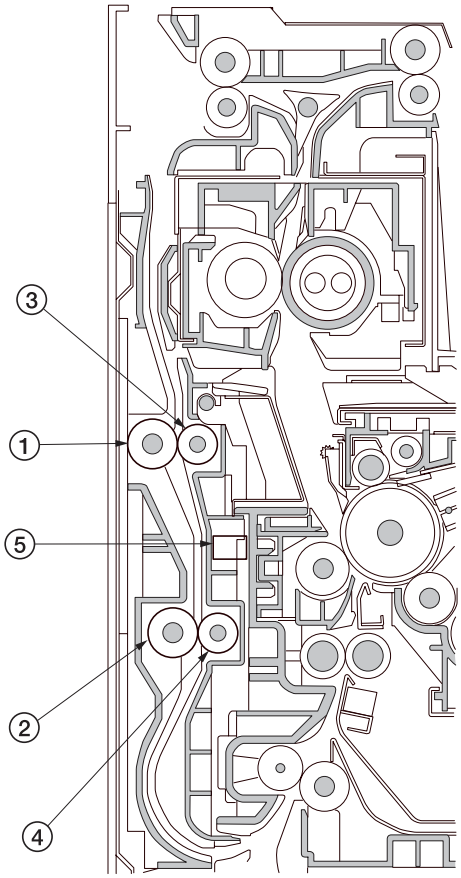

① Upper duplex feed roller
② Lower duplex feed roller
③ Duplex feed pulley
④ Duplex feed pulley
⑤ Duplex paper conveying switch (DUPPCSW)

Figure 2-1-24 Duplex unit

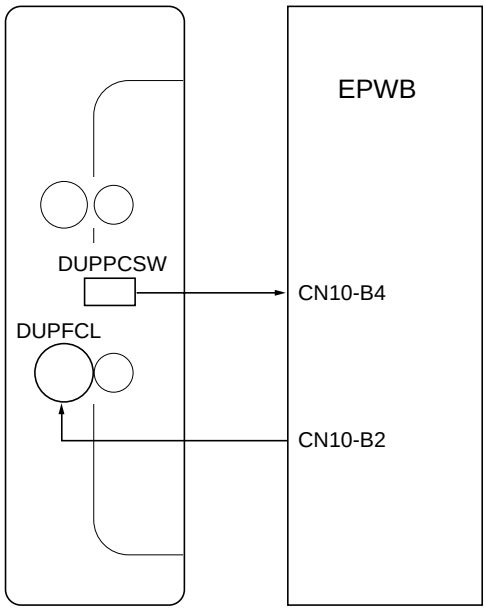

Figure 2-1-25 Duplex unit block diagram

(1) Paper conveying operation in duplex printing

Paper of which printing onto the reverse side is complete is conveyed to the switchback section, the eject motor switches from normal rotation to reverse rotation to switch the eject roller to reverse rotation, and the paper conveying direction is reversed. Paper that has been switched back is conveyed to the duplex unit via the eject roller and the switchback roller. Paper that has been conveyed to the duplex unit is conveyed to the paper feed section again by rotation of the upper duplex feed roller and the lower duplex feed roller and printing onto the front side is performed.

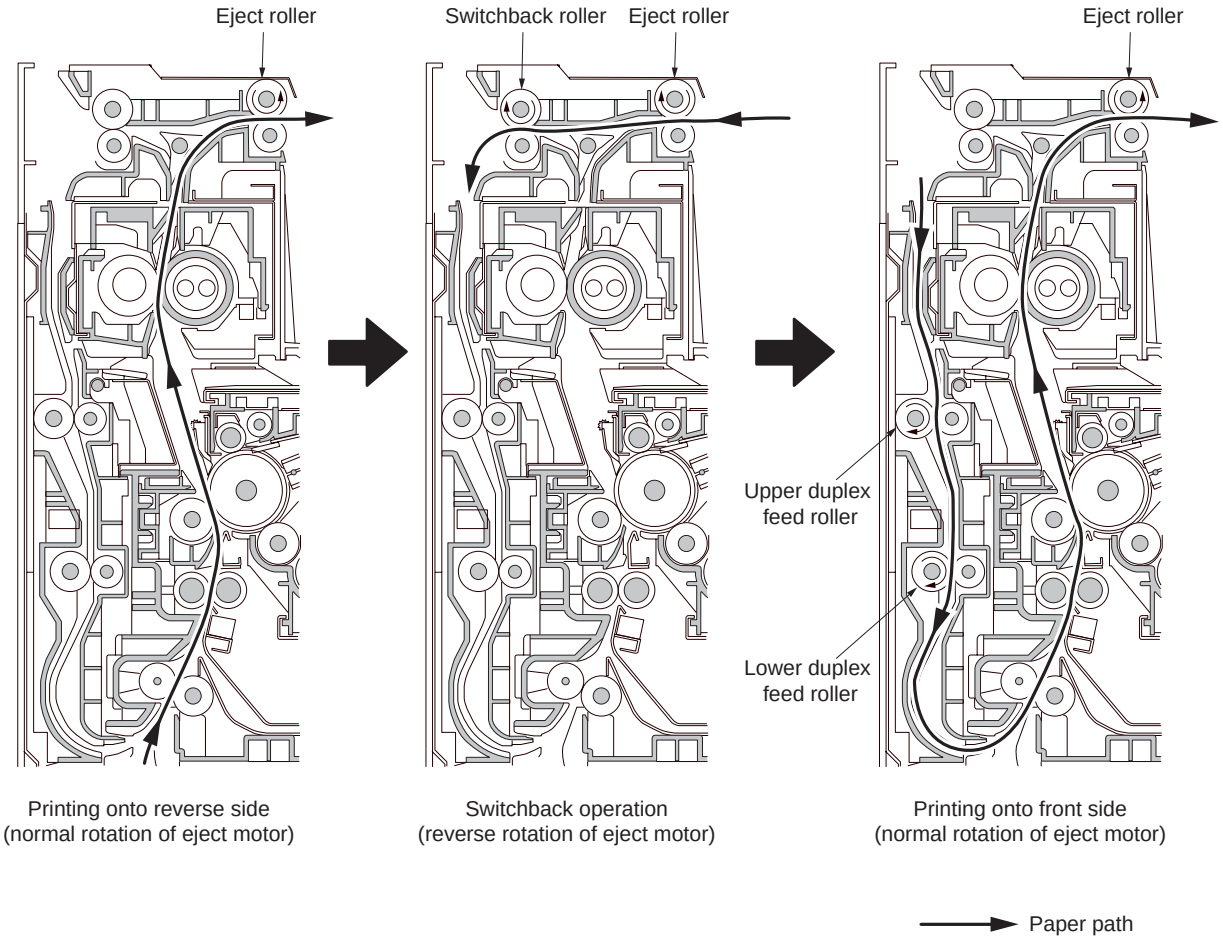

Figure 2-1-26

CONTENTS

2-2 Electrical parts layout

2-2-1 Electrical parts layout 2-2-1
(1) PWBs 2-2-1
(2) Switches and sensors 2-2-2
(3) Motors 2-2-4
(4) Other electrical components 2-2-5

2-2-1 Electrical parts layout

(1) PWBs

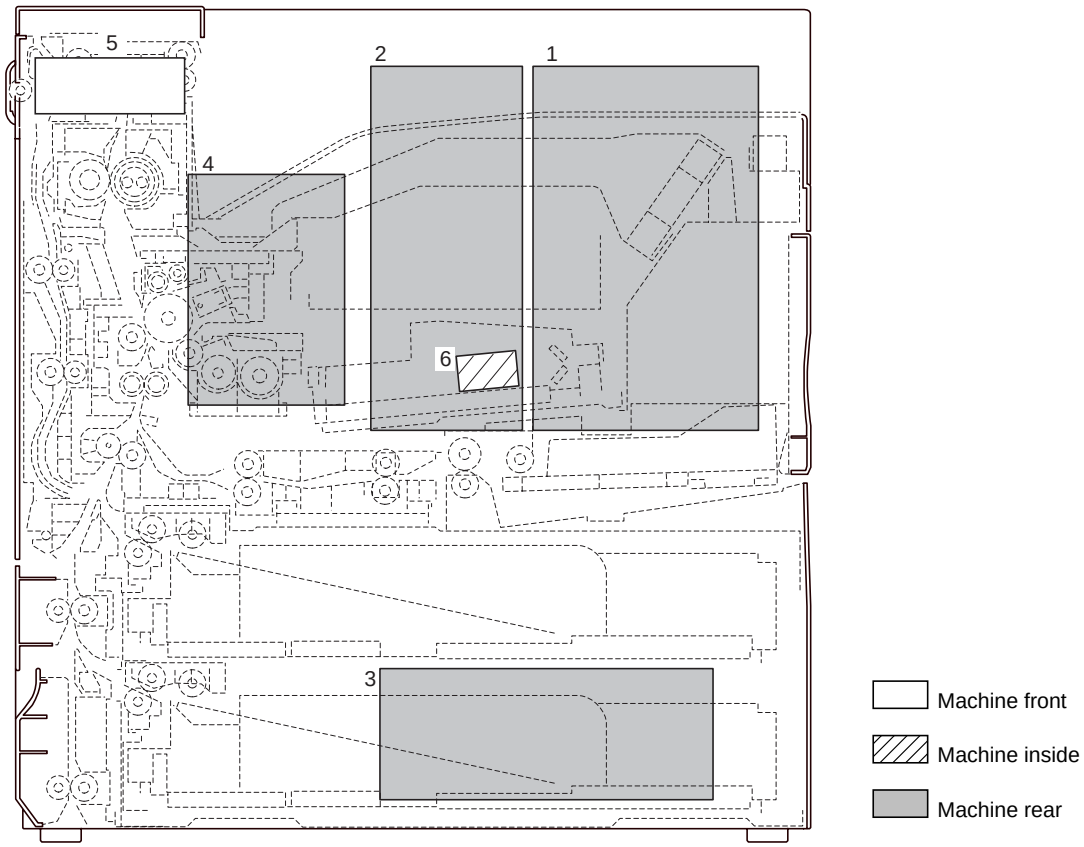

Figure 2-2-1 PWBs

1. Main controller PWB (MPWB) ..... Implements firmware for managing data processing for printing, interface with PC and the network, etc.
2. Engine controller PWB (EPWB) ..... Controls printer hardware including electrical components.
3. Power supply unit (PSU) ..... Generates +24 V DC, 12 V DC and 5 V DC; controls the fuser heater.
4. High-voltage transformer unit (HVTU) ..... Main charging. Generates developing bias and high voltages for transfer.
5. Operator panel PWB (OPPWB) ..... Displays LCD messages and LED indicators. Controls key inputs.
6. Laser diode PWB (LDPWB) ..... Generates and controls the laser beam.

(2) Switches and sensors

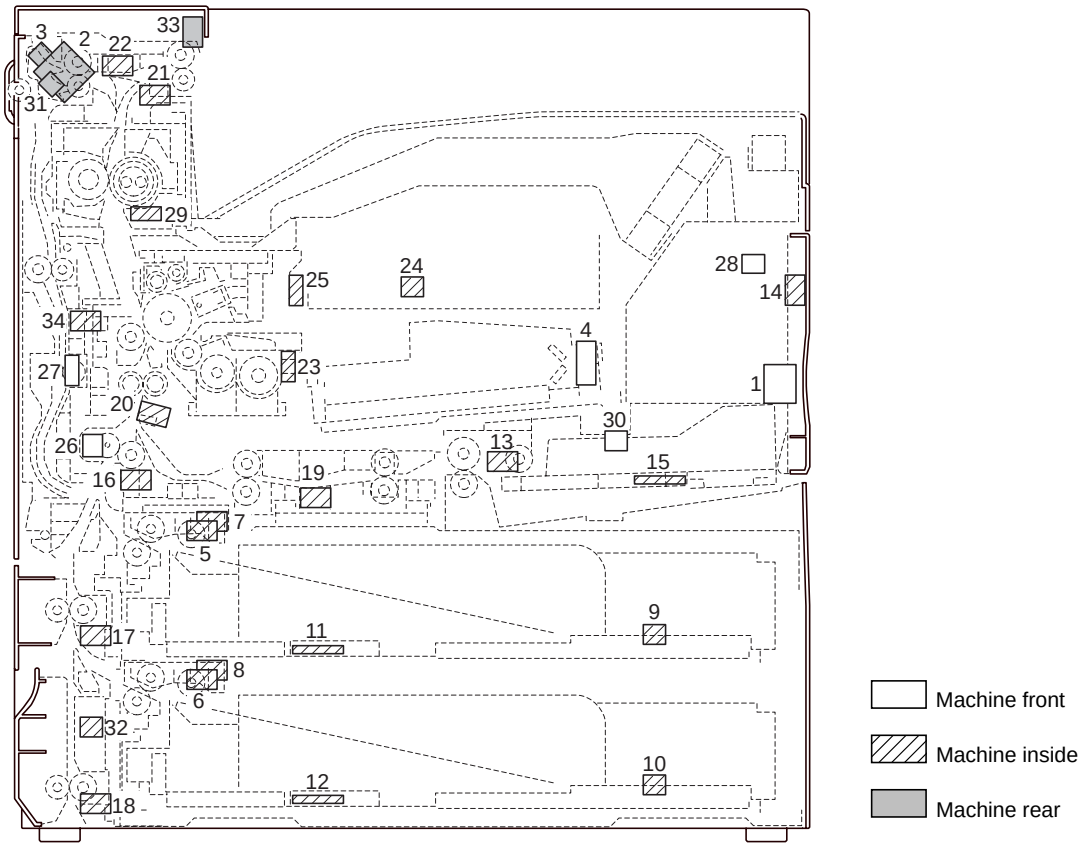

Figure 2-2-2 Switches and sensors

1. Power switch (POWSW) ..... Turns the AC power on and off.
2. Interlock switch (ILSW) ..... Turns the AC power for the fuser heater on and off.
3. Safety switch 1 (SSW1) ..... Breaks the safety circuit when the front cover is opened.
4. Safety switch 2 (SSW2) ..... Breaks the safety circuit when the conveying unit is opened.
5. Upper paper switch (PSW-U) ..... Detects the presence of paper in the upper cassette.
6. Lower paper switch (PSW-L) ..... Detects the presence of paper in the lower cassette.
7. Upper lift limit switch (LICSW-U) ..... Detects the upper cassette lift reaching the upper limit.
8. Lower lift limit switch (LICSW-L) ..... Detects the lower cassette lift reaching the upper limit.
9. Upper paper size length switch (PLSW-U) ..... Detects the length of paper in the upper cassette.
10. Lower paper size length switch (PLSW-L) ..... Detects the length of paper in the lower cassette.
11. Upper paper size width switch (PWSW-U) ..... Detects the width of paper in the upper cassette.
12. Lower paper size width switch (PWSW-L) ..... Detects the width of paper in the lower cassette.
13. MP paper switch (MPPSW) ..... Detects the presence of paper on the MP tray.
14. MP paper size length switch (MPPLSW) ..... Detects the length of paper on the MP tray.
15. MP paper size width switch (MPPWSW) ..... Detects the width of paper on the MP tray.
16. Feed switch 1 (FSW1) ..... Controls feed clutch 1 drive timing.
17. Feed switch 2 (FSW2) ..... Controls feed clutch 2 drive timing
18. Feed switch 3 (FSW3) ..... Controls feed clutch 3 drive timing
19. MP feed switch (MPFSW) ..... Controls MP feed clutch drive timing

20. Registration switch (RSW) ..... Controls the secondary paper feed start timing.
21. Eject switch (ESW) ..... Detects a paper misfeed in the fuser section.
22. Feedshift switch (FSSW) ..... Detects a paper misfeed in the switchback section in a duplex print.
23. Toner sensor (TNS) ..... Detects the toner density in the developing unit.
24. Toner container detection switch (TCDSW) ..... Detects the presence of the toner container.
25. Toner container sensor (TCS) ..... Detects the quantity of toner in a toner container.
26. Toner disposal bottle detection switch (TDDSW) ..... Detects the presence of the toner disposal bottle.
27. Overflow sensor (OFS) ..... Detects when the toner disposal bottle is full.
28. Humidity sensor (HUMSENS) ..... Detects absolute humidity.
29. Fuser unit thermistor (FTH) ..... Detects the heat roller temperature.
30. Front cover switch (FRCSW) ..... Detects the opening and closing of the front cover.
31. Conveying cover switch (CCSW) ..... Detects the opening and closing of the conveying cover.
32. Side cover switch (SCSW) ..... Detects the opening and closing of the side cover.
33. Paper full sensor (PFS) ..... Detects whether the face-down tray is full.
34. Duplex paper conveying switch (DUPPCSW) ..... Detects a paper jam in the duplex unit.

(3) Motors

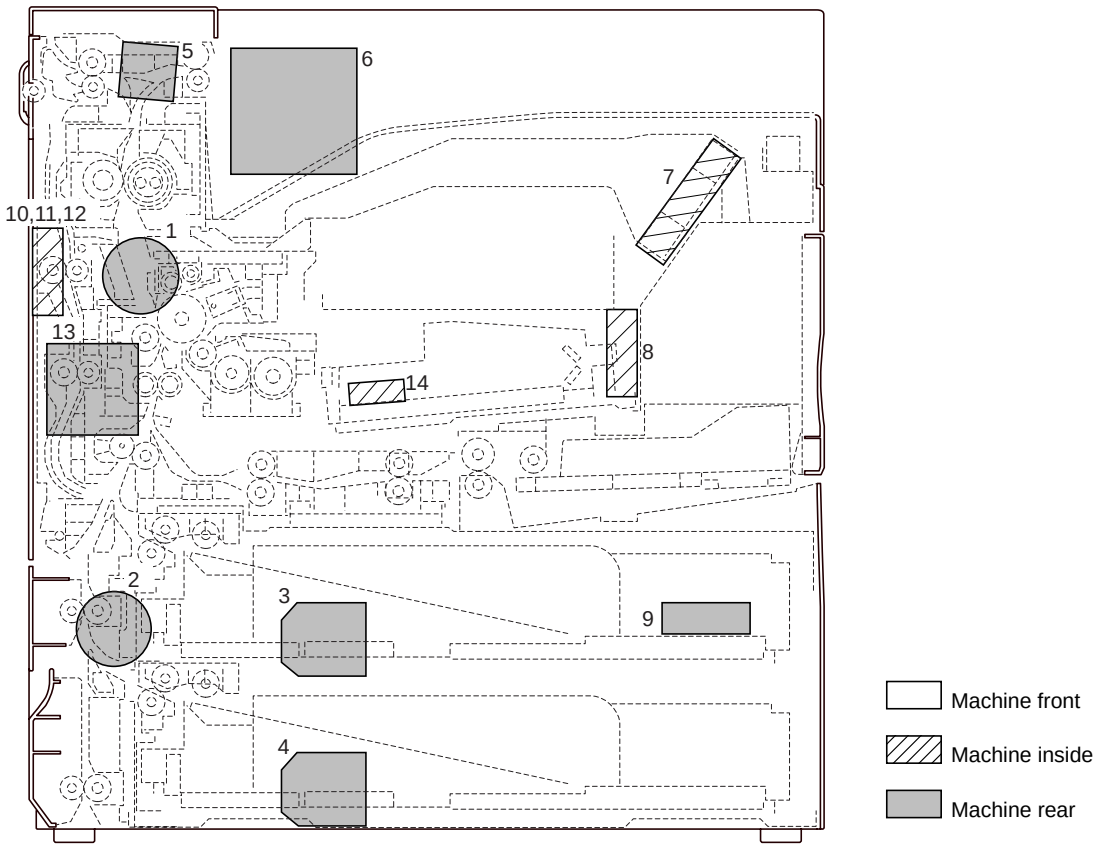

Figure 2-2-3 Motors

1. Drive motor (DM) ..... Drives the machine.
2. Paper feed motor (PFM) ..... Drives paper feed section.
3. Upper lift motor (LM-U) ..... Drives upper cassette lift.
4. Lower lift motor (LM-L) ..... Drives lower cassette lift.
5. Eject motor (EM) ..... Drives the eject section.
6. Cooling fan motor 1 (CFM1) ..... Cools the machine interior.
7. Cooling fan motor 2 (CFM2) ..... Cools the machine interior.
8. Cooling fan motor 3 (CFM3) ..... Cools the machine interior.
9. Cooling fan motor 4 (CFM4) ..... Cools the machine interior (LSU).
10. Cooling fan motor 5 (CFM5) ..... Cools the machine interior (around the power supply unit).
11. Cooling fan motor 6 (CFM6) ..... Cools the machine interior and supports paper transfer for duplex printing.
12. Cooling fan motor 7 (CFM7) ..... Cools the machine interior and supports paper transfer for duplex printing.
13. Cooling fan motor 8 (CFM8) ..... Cools the machine interior and supports paper transfer for duplex printing.
14. Polygon motor (PM) ..... Drives the polygon mirror.

(4) Other electrical components

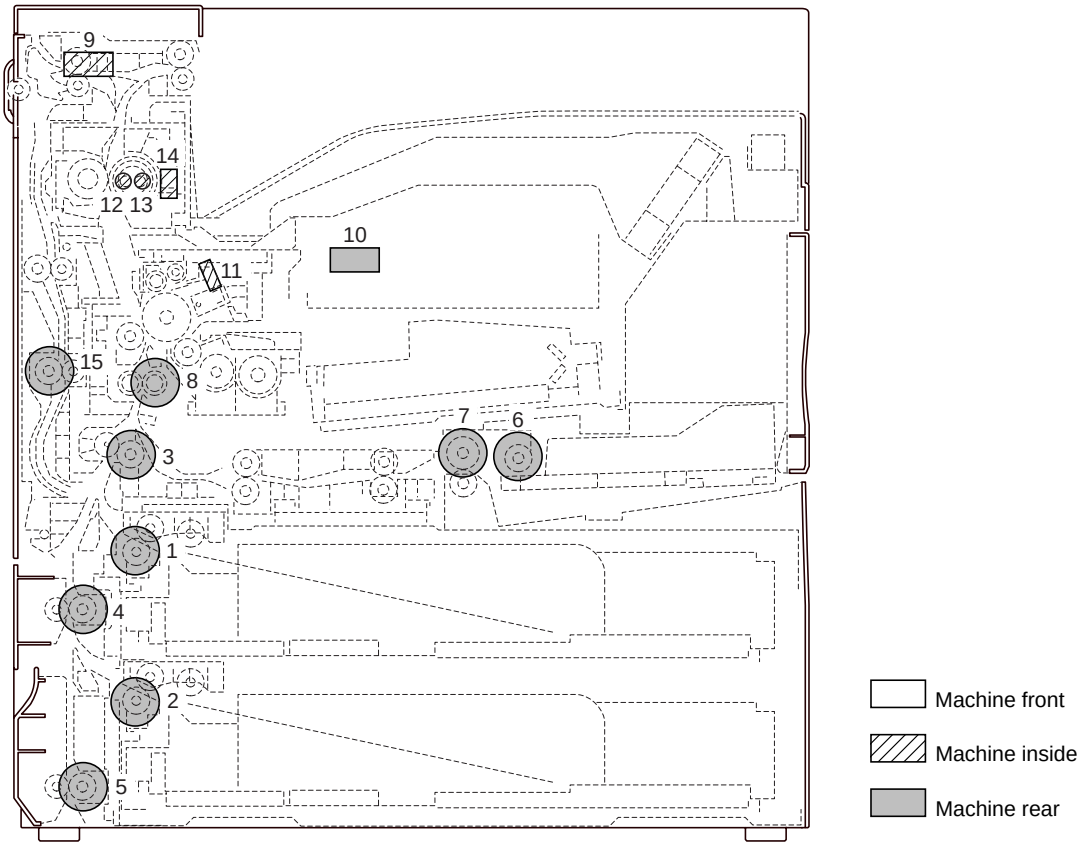

Figure 2-2-4 Other electrical components

1. Upper paper feed clutch (PFCL-U) ..... Primary paper feed from the upper cassette.
2. Lower paper feed clutch (PFCL-L) ..... Primary paper feed from the lower cassette.
3. Feed clutch 1 (FCL1) ..... Controls the drive of feed roller.
4. Feed clutch 2 (FCL2) ..... Controls the drive of feed roller.
5. Feed clutch 3 (FCL3) ..... Controls the drive of feed roller.
6. MP paper feed clutch (MPPFCL) ..... Primary paper feed from the MP tray.
7. MP feed clutch (MPFCL) ..... Controls the drive of MP feed roller.
8. Registration clutch (RCL) ..... Secondary paper feed.
9. Feedshift solenoid (FSSOL) ..... Operates the feedshift guide.
10. Toner feed solenoid (TNFSOL) ..... Replenishes toner.
11. Cleaning lamp (CL) ..... Removes residual charge from the drum surface.
12. Fuser heater M (FH-M) ..... Heats the heat roller.
13. Fuser heater S (FH-S) ..... Heats the heat roller.
14. Fuser unit thermostat (FTS) ..... Prevents overheating in the fuser section.
15. Duplex paper feed clutch (DUPFCL) ..... Controls the drive of the duplex feed roller.

CONTENTS

2-3 Operation of the PWBs

2-3-1 Power supply unit 2-3-1
2-3-2 Engine controller PWB 2-3-4

2-3-1 Power supply unit

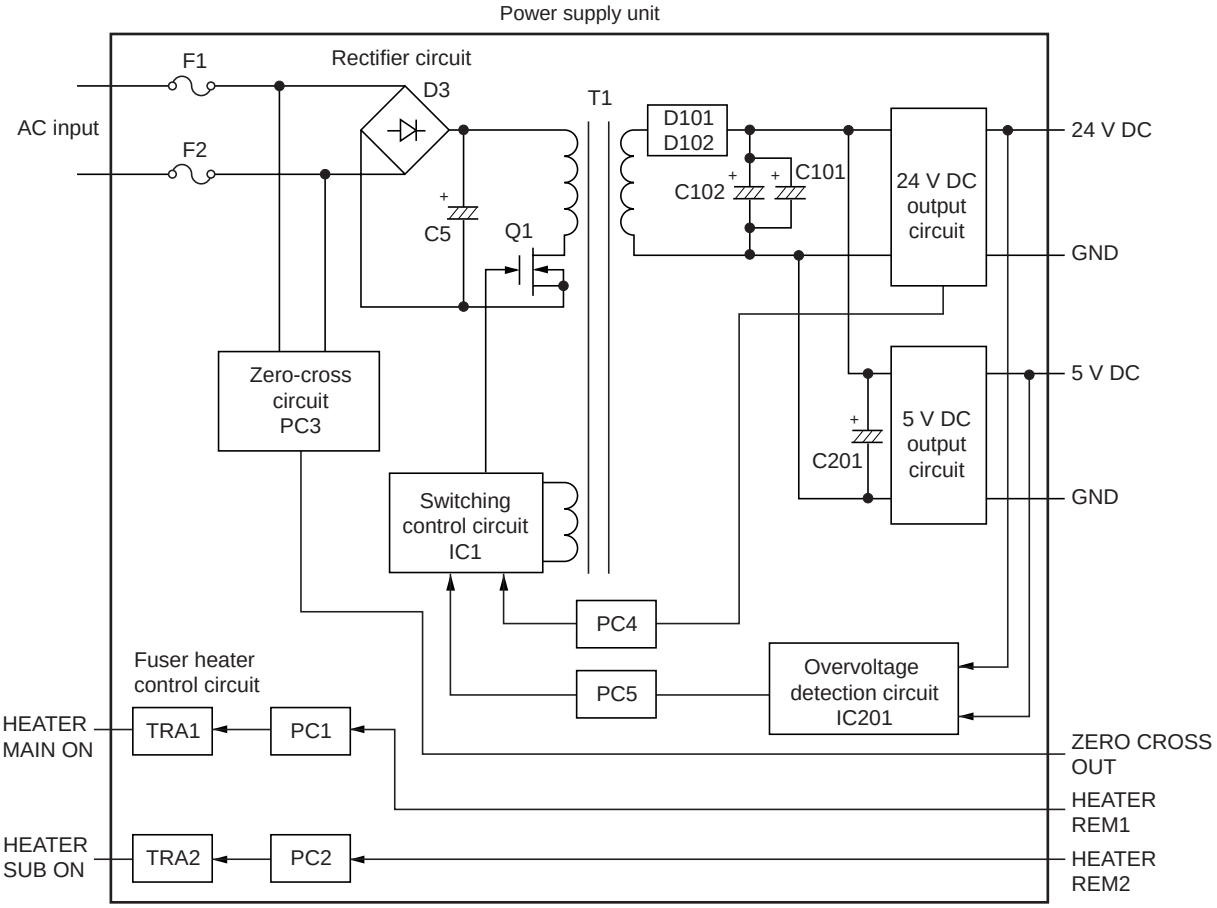

Figure 2-3-1 Power supply unit block diagram

The power supply unit (PSU) is a switching regulator that converts an AC input to generate 24 V DC and 5 V DC. It includes a rectifier circuit, a switching regulator circuit, a 24 V DC output circuit, a 5 V DC output circuit and a fuser heater control circuit.

The rectifier circuit full-wave rectifies the AC input using the diode bridge D3. The smoothing capacitor C5 smooths out the pulsed current from the diode bridge.

In the switching control circuit, PWM controller IC1 turns the power MOSFET Q1 on and off to switch the current induced in the primary coil of the transformer T1.

The 24 V DC output circuit smooths the current induced in the secondary coil of the transformer T1 via diodes D101 and D102 and smoothing capacitors C101 and C102, and the output is controlled by the overvoltage detection circuit IC201 and the power MOSFET Q201. For 24 V DC output, the PWM controller IC (IC1) of the switching control circuit changes the duty of the switching pulse width of the power MOSFET Q1 via a photo coupler PC4 based on the output voltage status to adjust the 24 V DC output.

The 5 V DC output circuit smooths the current induced in the secondary coil of the transformer T1 via diodes D101 and D102 and smoothing capacitors C101 and C102, and the output is controlled by the overvoltage detection circuit IC201 and the power MOSFET Q201. For 5 V DC output, the PWM controller IC (IC1) of the switching control circuit changes the duty of the switching pulse width of the power MOSFET Q1 via a photo coupler PC5 based on the output voltage status to adjust the 5 V DC output.

The overvoltage detection circuit IC201 monitors the overvoltage status of 24 V DC and 5 V DC, and when it detects an abnormal status, it gives immediately feedback to the PWM controller IC (IC1) via a photocoupler PC5 to stop control operation and moves the power source to a standby condition.

The fuser heater control circuit sends a waveform of which zero-cross is detected to the engine controller PWB (EPWB), which controls the timing of HEATER REM 1 and 2 based on it to turn on the phototriacs PC1 and PC2. When the phototriacs PC1 and PC2 turn on, AC current flows through the triacs TRA1 and TRA2 to turn the fuser heaters M and S on.

100V

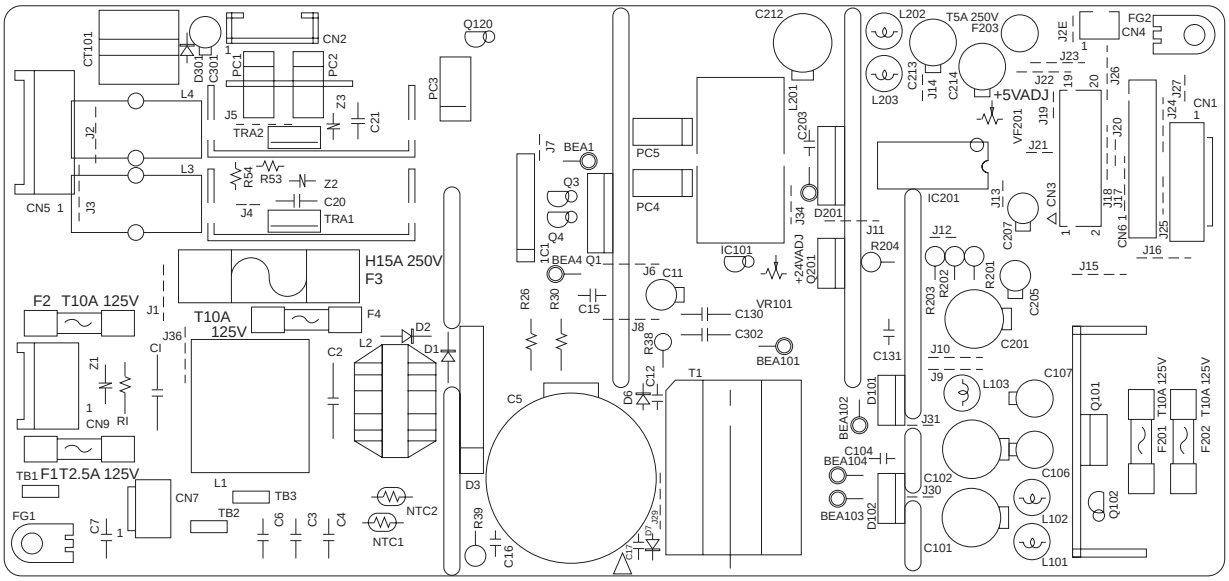

200V

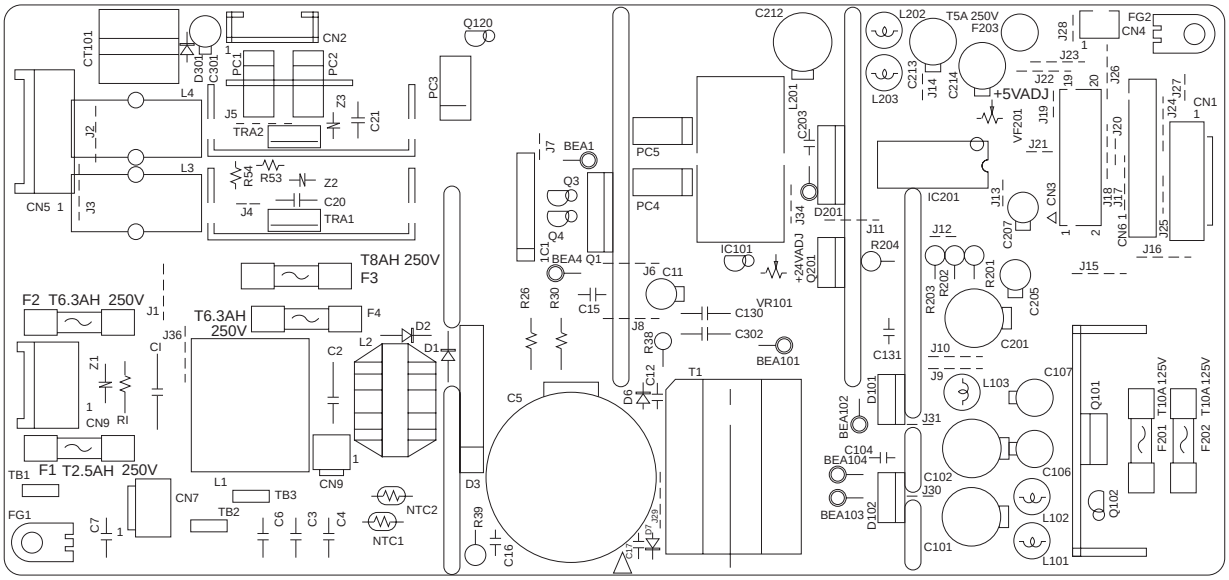

Figure 2-3-2 Power supply unit silk-screen diagram

Terminals (CN)		Voltage	Remarks
TB-1	TB-2	120 V AC	120 V AC supply, input
TB-1	TB-2	220-240 V AC	220-240 V AC supply, input
1-1	1-2	24 V DC	24 V DC supply for SSW1, output
1-5	1-2	5 V DC	5 V DC supply for EPWB, output
1-6	1-2	24 V DC	24 V DC supply for EPWB, output
2-1	2-2	0 - 5 V DC	Heater current monitor signal, output
2-3	2-2	0/5 V DC	FH-S on/off, input
2-4	2-2	0/5 V DC	FH-M on/off, input
2-5	2-2	5 V DC	5 V DC supply from EPWB, input
2-6	2-2	0/5 V DC (pulse)	Zero-cross signal, input
2-7	2-2	0/5 V DC	CFM4 remote signal, input
2-8	2-2	0/5 V DC	SLEEP signal, input
3-1	3-5	24 V DC	24 V DC supply for finisher*, output
3-2	3-6	24 V DC	24 V DC supply for finisher*, output
3-3	3-7	24 V DC	24 V DC supply for finisher*, output
3-4	3-8	24 V DC	24 V DC supply for finisher*, output
3-10	3-9	5 V DC	5 V DC supply for finisher*, output
3-11	3-12	5 V DC	5 V DC supply for paper feeder PF-70*/PF-75*, output
3-14	3-13	24 V DC	24 V DC supply for paper feeder PF-70*/PF-75*, output
3-15	3-18	24 V DC	24 V DC supply for switchback unit*, output
3-16	3-19	24 V DC	24 V DC supply for switchback unit*, output
3-17	3-20	5 V DC	5 V DC supply for switchback unit*, output
4-1	6-1	0/24 V DC	CFM4 on/off, output
4-2	6-1	24 V DC	24 V DC supply for CFM5, output
5-1	5-3	120/0 V AC	FH-M on/off, output
5-1	5-3	220-240/0 V AC	FH-M on/off, output
5-2	5-3	120/0 V AC	FH-S on/off, output
5-2	5-3	220-240/0 V AC	FH-S on/off, output
9-1	TB-2	120 V AC	120 V AC supply for PSW, output
9-1	TB-2	220-240 V AC	220-240 V AC supply for PSW, output

*Optional.

2-3-2 Engine controller PWB

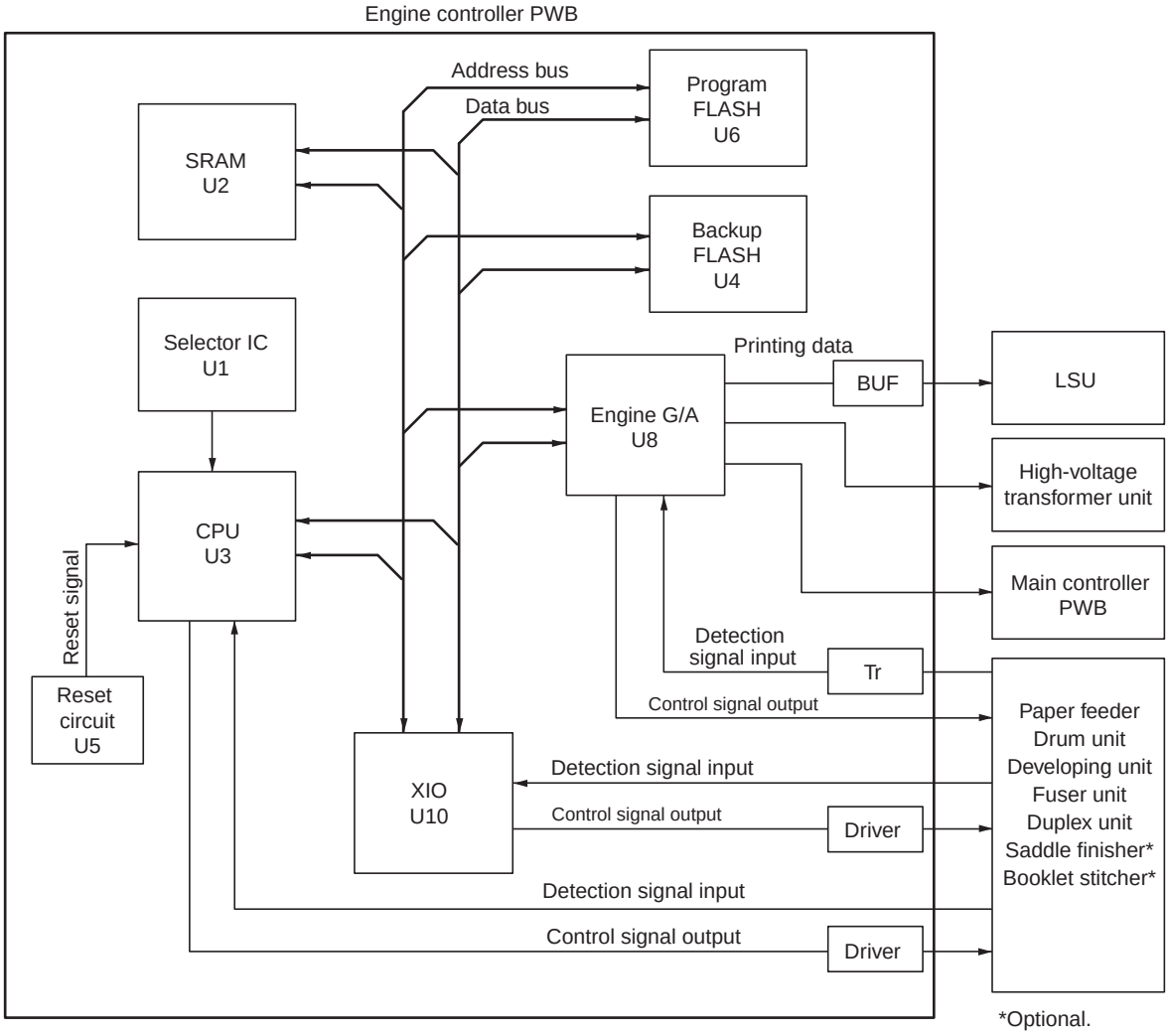

Figure 2-3-3 Engine controller PWB block diagram

The engine controller PWB (EPWB) consists of the CPU. The CPU U3 communicates with other circuit boards, the image processing system and the engine drive system.
The CPU U3 operates on an 8-bit bus. It uses the SRAM U2 for work memory and FLASH U4 for backup memory. In accordance with the control program in the program FLASH U6, the CPU U3 communicates with the optional devices via the serial communication function in the CPU and XIO U10. The CPU U3 controls the LSU, which is for image output control via the image processing engine G/A U8, and drives the machine, conveys paper and detects abnormalities via XIO U10.

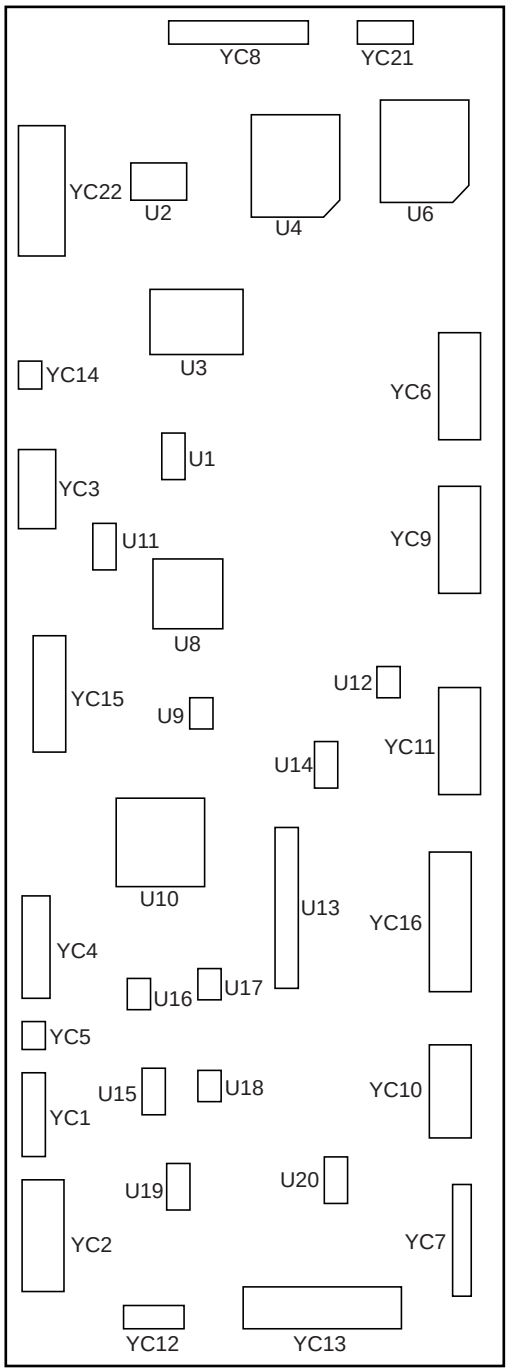

Figure 2-3-4 Engine controller PWB silk-screen diagram

Terminals (CN)		Voltage	Remarks
1-1	1-7	0/5 V DC	SLEEP signal, output
1-2	1-7	0/5 V DC	CFM4 remote signal, output
1-3	1-7	0/5 V DC (pulse)	Zero-cross signal, input
1-4	1-7	5 V DC	5 V DC supply for PSU, output
1-5	1-7	0/5 V DC	FH-M on/off, output
1-6	1-7	0/5 V DC	FH-S on/off, output
1-8	1-7	0 - 5 V DC	Heater current monitor signal, input
2-1	2-2	24 V DC	24 V DC supply from SSW2, input
2-5	2-2	5 V DC	5 V DC supply from PSU, input
2-6	2-2	24 V DC	24 V DC supply from PSU, input
3-A1	3-A2	0/5 V DC (pulse)	Serial signal for switchback unit*, input
3-A3	3-A4	0/5 V DC (pulse)	Serial signal from switchback unit*, output
3-A5	3-A4	0/5 V DC	Switchback unit* connection signal, input
3-A6	3-A4	0/5 V DC	RESET signal for switchback unit*, output
3-B1	3-B2	0/5 V DC (pulse)	Serial signal for paper feeder PF-70*/PF-75*, output
3-B3	3-B4	0/5 V DC (pulse)	Serial signal from paper feeder PF-70*/PF-75*, input
3-B5	3-B4	0/5 V DC	FSW on/off signal from paper feeder PF-70*/PF-75*, input
3-B6	3-B4	0/5 V DC	RESET signal for paper feeder PF-70*/PF-75*, output
4-1	4-2	0/5 V DC (pulse)	Serial signal from finisher*, input
4-3	4-4	0/5 V DC (pulse)	Serial signal for finisher*, output
5-1	4-4	0/5 V DC	RESET signal for finisher*, output
5-2	4-4	0/5 V DC	Finisher* connection signal, input
6-A1	6-A4	0/5 V DC	MPPWSW paper width detection signal, input
6-A2	6-A4	0/5 V DC	MPPWSW paper width detection signal, input
6-A3	6-A4	0/5 V DC	MPPWSW paper width detection signal, input
6-A5	6-A4	5 V DC	5 V DC supply for MPPSW, output
6-A6	6-A4	0/5 V DC	MPPSW on/off, input
6-A8	6-A7	24 V DC	24 V DC supply for MPPFCL, output
6-A9	6-A7	0/24 V DC	MPPFCL on/off, output
6-A10	6-A7	24 V DC	24 V DC supply for MPFCL, output
6-A11	6-A7	0/24 V DC	MPFCL on/off, output
6-B1	6-B3	5 V DC	5 V DC supply for OFS, output
6-B2	6-B3	0/5 V DC	OFS on/off, input
6-B4	6-B5	0/5 V DC	TDDSW on/off, input
6-B6	6-B7	0/5 V DC	FRCSW on/off, input
6-B8	6-B9	0/24 V DC	CFM2, 3 on/off, output
6-B10	6-B12	5 V DC	5 V DC supply for MPPLSW, output
6-B11	6-B12	0/5 V DC	MPPLSW on/off, input
7-1	7-3	0 - 5 V DC	Developing bias control voltage, output
7-2	7-3	24 V DC	24 V DC supply for HVTU, output
7-4	7-3	0/5 V DC	Main charging on/off, output
7-5	7-3	0/5 V DC (pulse)	Developing bias CLOCK signal, output
7-6	7-3	0/5 V DC	Separation charging on/off, output
7-7	7-3	0 - 5 V DC	Separation charging control voltage, output
7-8	7-3	0 - 5 V DC	Transfer charging control voltage, output
7-9	7-3	0 - 5 V DC	Transfer limit voltage, output
7-10	7-3	0/5 V DC	Transfer charging on/off, output
7-11	7-3	0/5 V DC	Transfer reverse bias remote signal, output
7-12	7-3	0/5 V DC	Transfer forward bias remote signal, output
7-13	7-3	0/5 V DC	Transfer current detection signal, input
7-14	7-3	0/5 V DC	Transfer current detection signal, input
8-1	8-7	5 V DC	5 V DC supply for LSU, output
8-2	8-7	0/5 V DC	LSU SAMPLE signal, output
8-3	8-7	0/5 V DC	LSU POWCONT signal, output
8-4	8-7	0/5 V DC	LSU LASER signal, output
8-5	8-7	0/5 V DC	LSU VIDEO + signal, output

*Optional.

Terminals (CN)		Voltage	Remarks
8-6	8-7	0/5 V DC	LSU VIDEO - signal, output
8-8	8-9	0/5 V DC	LSU PD signal, input
8-10	8-11	24 V DC	24 V DC supply for PM, output
8-12	8-11	0/24 V DC	PM SCAN signal, output
8-13	8-9	0/5 V DC	PM READY signal, input
8-14	8-11	0/5 V DC (pulse)	PM CLOCK signal, output
9-A2	9-A1	0/5 V DC	MPFSW on/off, input
9-A3	9-A1	5 V DC	5 V DC supply for MPFSW, output
9-A4	9-A6	5 V DC	5 V DC supply for TCS, output
9-A5	9-A6	0/5 V DC	TCS on/off, input
9-A8	9-A10	5 V DC	5 V DC supply for TNS, output
9-A9	9-A10	0/5 V DC	TNS on/off, input
9-A11	9-A10	0/5 V DC	Developing unit detection signal, input
9-A12	9-A10	0/5 V DC	Developing unit FUSE CUT signal, output
9-B2	9-B1	0/24 V DC	TNFSOL on/off, output
9-B3	9-B4	0/5 V DC	TCDSW on/off, input
9-B7	9-B6	0/5 V DC	CL on/off, output
9-B8	9-B6	0/5 V DC	Drum unit DATA signal, output
9-B9	9-B6	0/5 V DC	Drum unit CLOCK signal, output
9-B11	9-B10	0/5 V DC	Drum unit detection signal, input
9-B12	9-10	5 V DC	5 V DC supply for drum unit, output
10-A2	10-A1	0/5 V DC	RSW on/off, input
10-A3	10-A1	5 V DC	5 V DC supply for RSW, output
10-A5	10-A8	5 V DC	5 V DC supply for FTH, output
10-A6	10-A8	0 - 5 V DC	FTH detection voltage, input
10-A7	10-A8	0/5 V DC	FTH FUSE CUT signal, input
10-B1	10-B3	24 V DC	24 V DC supply for DUPFCL, output
10-B2	10-B3	0/24 V DC	DUPFCL on/off, output
10-B4	10-B3	0/5 V DC	DUPPCSW on/off, input
10-B5	10-B3	5 V DC	5 V DC supply for DUPPCSW, output
10-B7	10-B6	0/5 V DC	Duplex unit connection signal, input
10-B9	10-B3	5 V DC	24 V DC supply for CFM5, 6 ,7 , output
10-B10	10-B3	0/5 V DC	CFM5, 6, 7 on/off, output
11-1	11-3	24 V DC	24 V DC supply for DM, output
11-2	11-4	24 V DC	24 V DC supply for PFM, output
11-5	11-7	5 V DC	24 V DC supply for DM, input
11-9	11-3	0/24 V DC	DM S/S signal, output
11-10	11-4	0/24 V DC	PFM S/S signal, output
11-11	11-3	0/24 V DC	DM L/D signal, input
11-12	11-4	0/24 V DC	PFM L/D signal, input
11-13	11-7	0/5 V DC (pulse)	DM CLOCK signal, output
11-14	11-4	0/24 V DC	FCL1 on/off, output
11-15	11-4	24 V DC	24 V DC supply for FCL1, output
11-17	11-16	0/5 V DC	FSW1 on/off, input
11-18	11-16	5 V DC	5 V DC supply for FSW, output
12-1	12-6	24 V DC	24 V DC supply for PWSW-U, output
12-2	12-6	24 V DC	24 V DC supply from PWSW-U, input
12-3	12-6	0/24 V DC	PWSW-U paper width detection signal, input
12-4	12-6	0/24 V DC	PWSW-U paper width detection signal, input
12-5	12-6	0/24 V DC	PWSW-U paper width detection signal, input
12-7	12-12	24 V DC	24 V DC supply for PWSW-L, output
12-8	12-12	24 V DC	24 V DC supply from PWSW-L, input
12-9	12-12	0/24 V DC	PWSW-L paper width detection signal, input
12-10	12-12	0/24 V DC	PWSW-L paper width detection signal, input
12-11	12-12	0/24 V DC	PWSW-L paper width detection signal, input
13-A2	13-A1	0/5 V DC	FSW3 on/off, input

Terminals (CN)		Voltage	Remarks
13-A3	13-A1	5 V DC	5 V DC supply for FSW3, output
13-A4	13-A16	24 V DC	24 V DC supply for FCL3, output
13-A5	13-A16	0/24 V DC	FCL3 on/off, output
13-A7	13-A6	0/5 V DC	FSW2 on/off, input
13-A8	13-A6	5 V DC	5 V DC supply for FSW2, output
13-A10	13-A9	0/5 V DC	SCSW on/off, input
13-A11	13-A16	24 V DC	24 V DC supply for FCL2, output
13-A12	13-A16	0/24 V DC	FCL2 on/off, output
13-A13	13-A14	0/5 V DC	LM-U paper level detection switch on/off, input
13-A15	13-A14	0/5 V DC	LM-U paper level detection switch on/off, input
13-A17	13-A16	0/24 V DC	LM-U on/off, output
13-A19	13-A18	0/5 V DC	PLSW-L on/off, input
13-B2	13-B1	0/5 V DC	PLSW-U on/off, input
13-B3	13-B4	0/5 V DC	LM-L paper level detection switch on/off, input
13-B5	13-B4	0/5 V DC	LM-L paper level detection switch on/off, input
13-B7	13-B6	0/24 V DC	LM-L on/off, output
13-B9	13-B8	0/5 V DC	LICSW-U on/off, input
13-B10	13-B8	5 V DC	5 V DC supply for LICSW-U, output
13-B12	13-B11	0/5 V DC	PSW-U on/off, input
13-B13	13-B11	5 V DC	5 V DC supply for PSW-U, output
13-B15	13-B14	0/5 V DC	LICSW-L on/off, input
13-B16	13-B14	5 V DC	5 V DC supply for LICSW-L, output
13-B18	13-B17	0/5 V DC	PSW-L on/off, input
13-B19	13-B17	5 V DC	5 V DC supply for PSW-L, output
16-A1	16-A14	0/24 V DC	FSSOL release signal, output
16-A2	16-A14	0/24 V DC	FSSOL acutuate signal, output
16-A3	16-A14	24 V DC	24 V DC supply for FSSOL, output
16-A5	16-A4	0/5 V DC	FSSW on/off, input
16-A6	16-A4	5 V DC	5 V DC supply for FSSW, input
16-A11	16-A10	0/5 V DC	ESW on/off, input
16-A12	16-A10	5 V DC	5 V DC supply for ESW, output
16-A13	16-A14	0/24 V DC	CFM1 on/off, output
16-A16	16-A15	0/5 V DC	CCSW on/off, input
16-B1	16-A14	0/24 V DC	PFCL-U on/off, output
16-B2	16-A14	24 V DC	24 V DC supply for PFCL-U, output
16-B3	16-A14	24 V DC	24 V DC supply for PFCL-L, output
16-B4	16-A14	0/24 V DC	PFCL-L on/off, output
16-B5	16-A14	24 V DC	24 V DC supply for RCL, output
16-B6	16-A14	0/24 V DC	RCL on/off, output
16-B7	16-B9	5 V DC	5 V DC supply for HUMSENS, output
16-B8	16-B9	0 - 5 V DC	HUMSENS detection voltage, input
16-B10	16-B9	0 - 5 V DC	ETTH detection voltage, input
16-B11	16-A14	0/24 V DC (pulse)	EM coil energization pulse, output ($\overline{B}$)
16-B12	16-A14	0/24 V DC (pulse)	EM coil energization pulse, output (B)
16-B13	16-A14	0/24 V DC (pulse)	EM coil energization pulse, output ($\overline{A}$)
16-B14	16-A14	0/24 V DC (pulse)	EM coil energization pulse, output (A)
16-B15	16-A14	24 V DC	24 V DC supply for CFM4, output
16-B16	16-A14	0/24 V DC	CFM4 on/off, output
17-3	16-A14	24 V DC	24 V DC supply for CFM8, output
17-4	16-A14	0/24 V DC	CFM8 on/off, output
21-1	21-2	0/5 V DC	OPPWB FPRSTN signal, output
21-3	21-2	0/5 V DC	OPPWB FPCLK signal, input
21-4	21-2	0/5 V DC	OPPWB FPDIR signal, input
21-5	21-2	0 - 5 V DC	OPPWB FPDAT signal, input
21-6	21-2	5 V DC	5 V DC supply for OPPWB, output
22-A1	22-A2	5/0 V DC (pulse)	Main controller PWB PRINTN signal, output

Terminals (CN)		Voltage	Remarks
22-A3	22-A2	5/0 V DC (pulse)	Main controller PWB SI signal, output
22-A4	22-A2	5/0 V DC (pulse)	Main controller PWB SCLK signal, input
22-A5	22-A2	5/0 V DC (pulse)	Main controller PWB SBSY signal, output
22-A6	22-A2	5/0 V DC (pulse)	Main controller PWB SO signal, input
22-A7	22-A2	5/0 V DC (pulse)	Main controller PWB RESET signal, output
22-A8	22-A2	5/0 V DC (pulse)	Main controller PWB PDOUT signal, output
22-A10	22-A2	5/0 V DC (pulse)	Main controller PWB VDATAP signal, input
22-A12	22-A2	5/0 V DC (pulse)	Main controller PWB VDATAN signal, input
22-A14	22-A2	5/0 V DC (pulse)	Main controller PWB FPCLK signal, output
22-A15	22-A2	5/0 V DC (pulse)	Main controller PWB FPDAT signal, input
22-A17	22-A2	5/0 V DC (pulse)	Main controller PWB VDATA signal, input
22-B1	22-A2	5 V DC	Main controller PWB 5 V DC supply, output
22-B2	22-A2	5 V DC	Main controller PWB 5 V DC supply, output
22-B3	22-A2	5 V DC	Main controller PWB 5 V DC supply, output
22-B4	22-A2	5/0 V DC (pulse)	Main controller PWB SDIR signal, output
22-B5	22-A2	5/0 V DC (pulse)	Main controller PWB ESGIR signal, output
22-B6	22-A2	5/0 V DC (pulse)	Main controller PWB VDFON signal, output
22-B7	22-A2	5/0 V DC (pulse)	Main controller PWB VSREQN signal, output
22-B12	22-A2	5/0 V DC (pulse)	Main controller PWB FPDIR signal, output
22-B13	22-A2	5/0 V DC (pulse)	Main controller PWB FPPOWER signal, output
22-B15	22-A2	5 V DC	Main controller PWB 5 V DC supply, output
22-B16	22-A2	5 V DC	Main controller PWB 5 V DC supply, output
22-B17	22-A2	5 V DC	Main controller PWB 5 V DC supply, output
22-B18	22-A2	5 V DC	Main controller PWB 5 V DC supply, output
22-B19	22-A2	5 V DC	Main controller PWB 5 V DC supply, output
22-B20	22-A2	5 V DC	Main controller PWB 5 V DC supply, output

CONTENTS

2-4 Appendixes

Timing chart No. 1 2-4-1
Timing chart No. 2 2-4-2
Timing chart No. 3 2-4-3
Timing chart No. 4 2-4-4
Timing chart No. 5 2-4-5
Timing chart No. 6 2-4-6
Wiring diagram 2-4-7

Timing chart No. 1 From the power switch turned on to machine stabilization

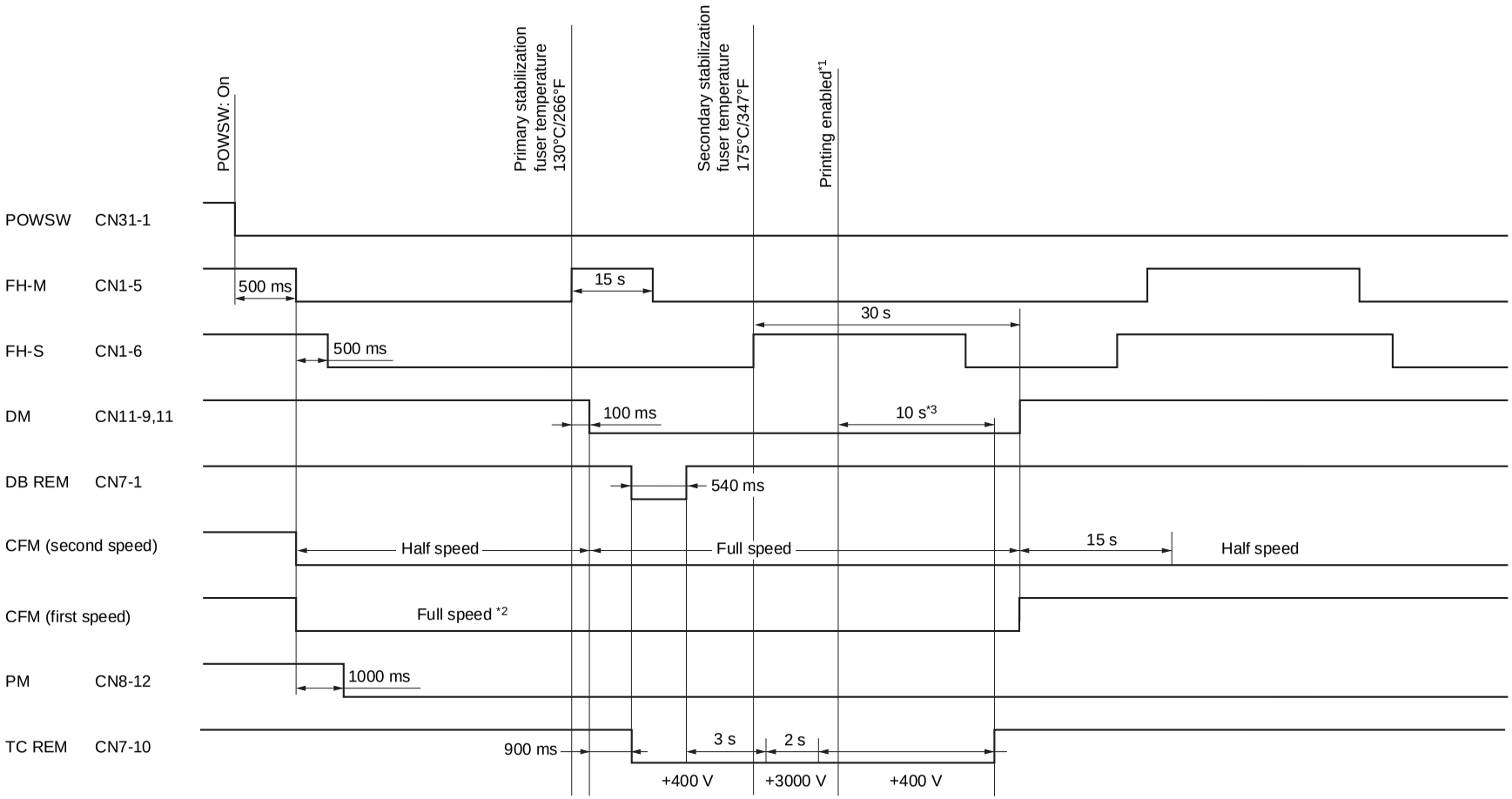

*1: Printing is enabled as follows:
1. When fixing temperature at the power switch turning on is 100°C/212°F or lower
Absolute humidity is 15 g/m^3 or higher:
Printing is enabled 120 s after fuser heater M (FH-M) turning on.
2. When fuser temperature at the power switch turning on is 100°C/212°F or lower
The fuser temperature at the power switch turning on is 13°C/55.4°F or higher and the ambient temperature is 18°C/64.4°F or higher:
Printing is enabled at the earlier timing of either 41 s after fuser heater M (FH-M) turning on or when the printer enters secondary stabilization.
Other than the above:
Printing is enabled at the later timing of either 69 s after fuser heater M (FH-M) turning on or when the printer enters secondary stabilization.
3. Other conditions than 1 and 2
Printing is enabled when the printer enters secondary stabilization.

*2: Rotates for 180 s at full speed when the fuser temperature at the power switch turning on is 100°C/212°F or lower, and the absolute humidity is 15 g/m^3 or higher.

*3: 60 s when the fuser temperature at power switch turning on is 100°C/212°F or lower, and the absolute humidity is 15 g/m^3 or higher.

Timing chart No. 2 One sheet printing from the MP tray

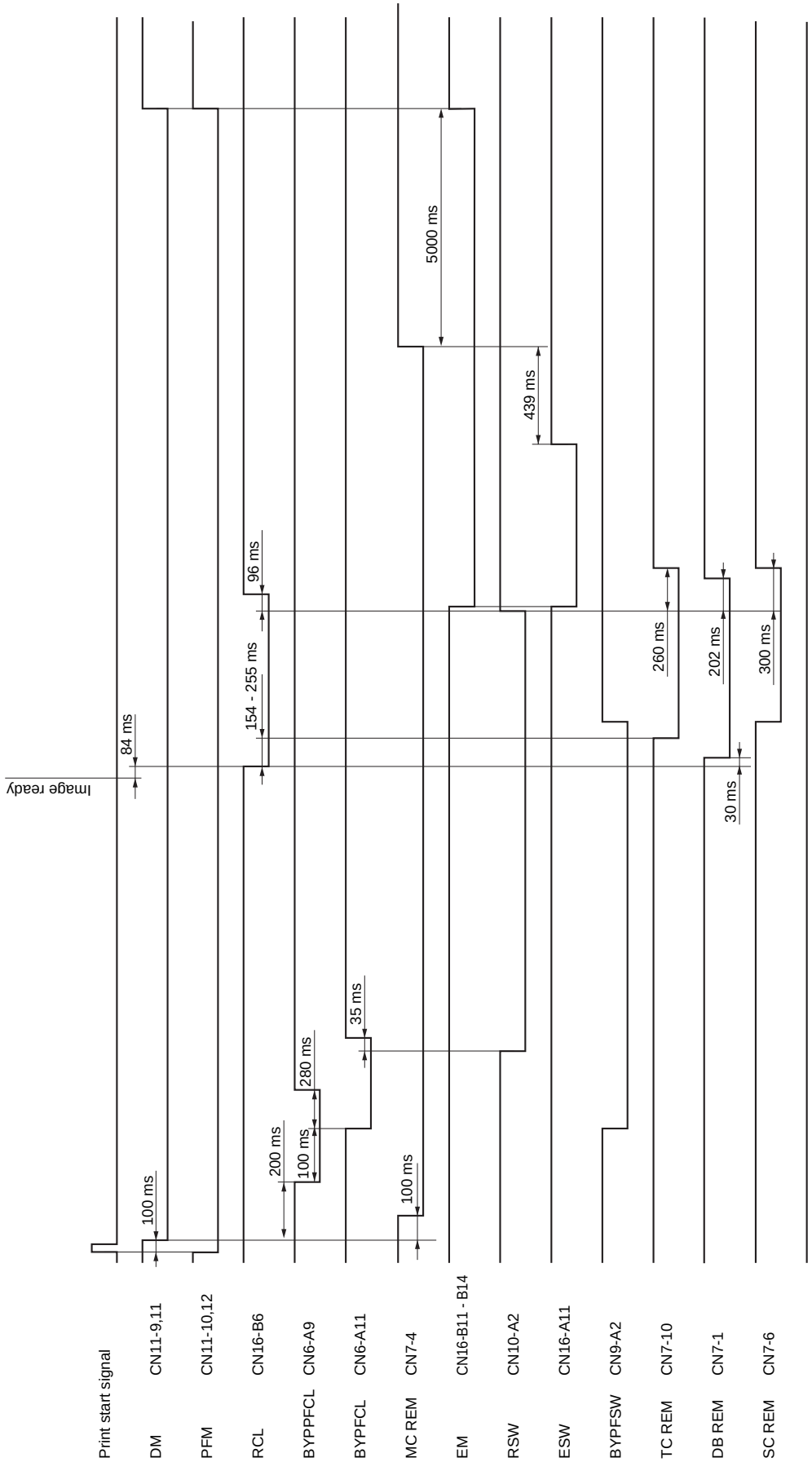

Timing chart No. 3 One sheet printing from the upper cassette of the printer

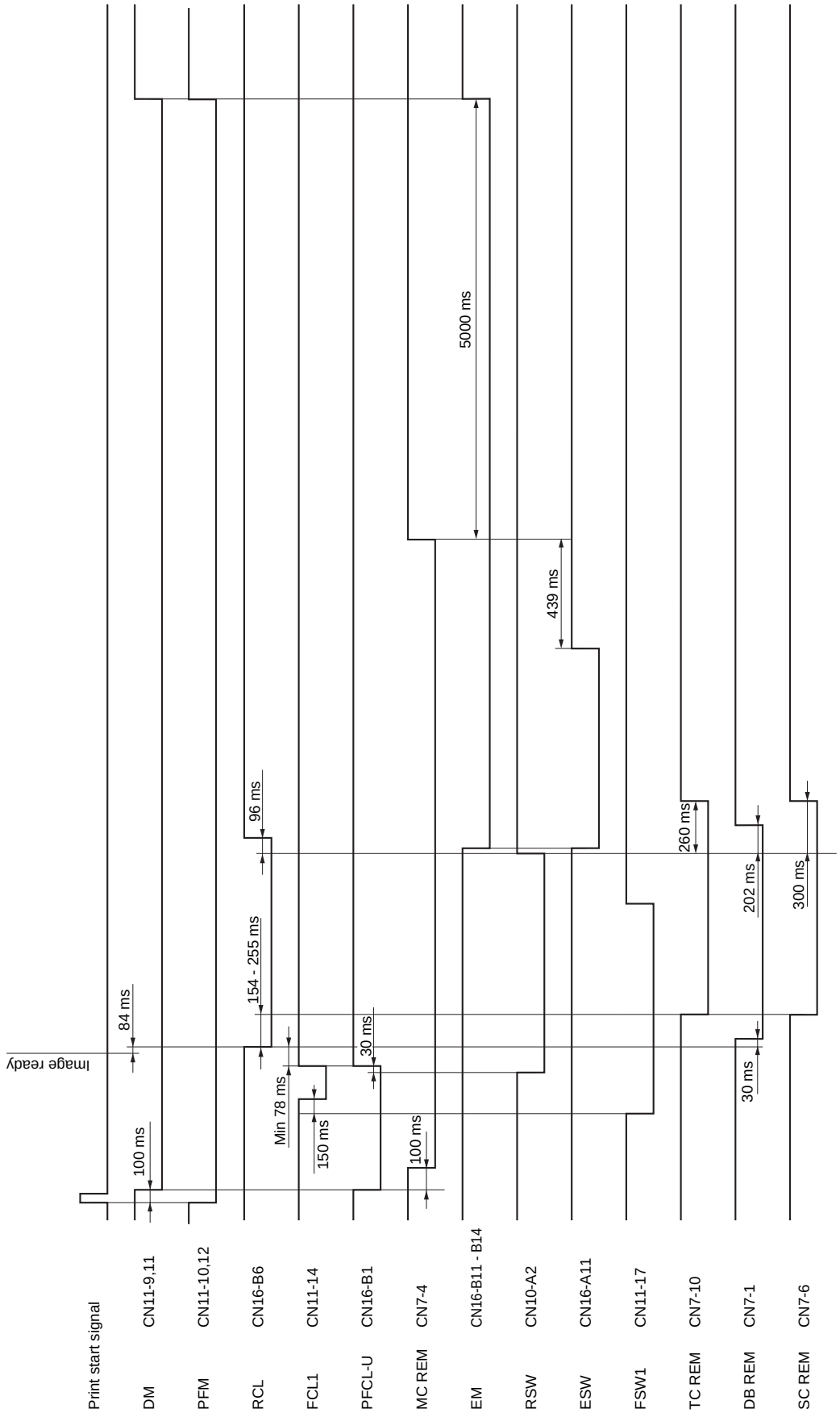

Timing chart No. 4 Continual two printing from the lower cassette of the printer

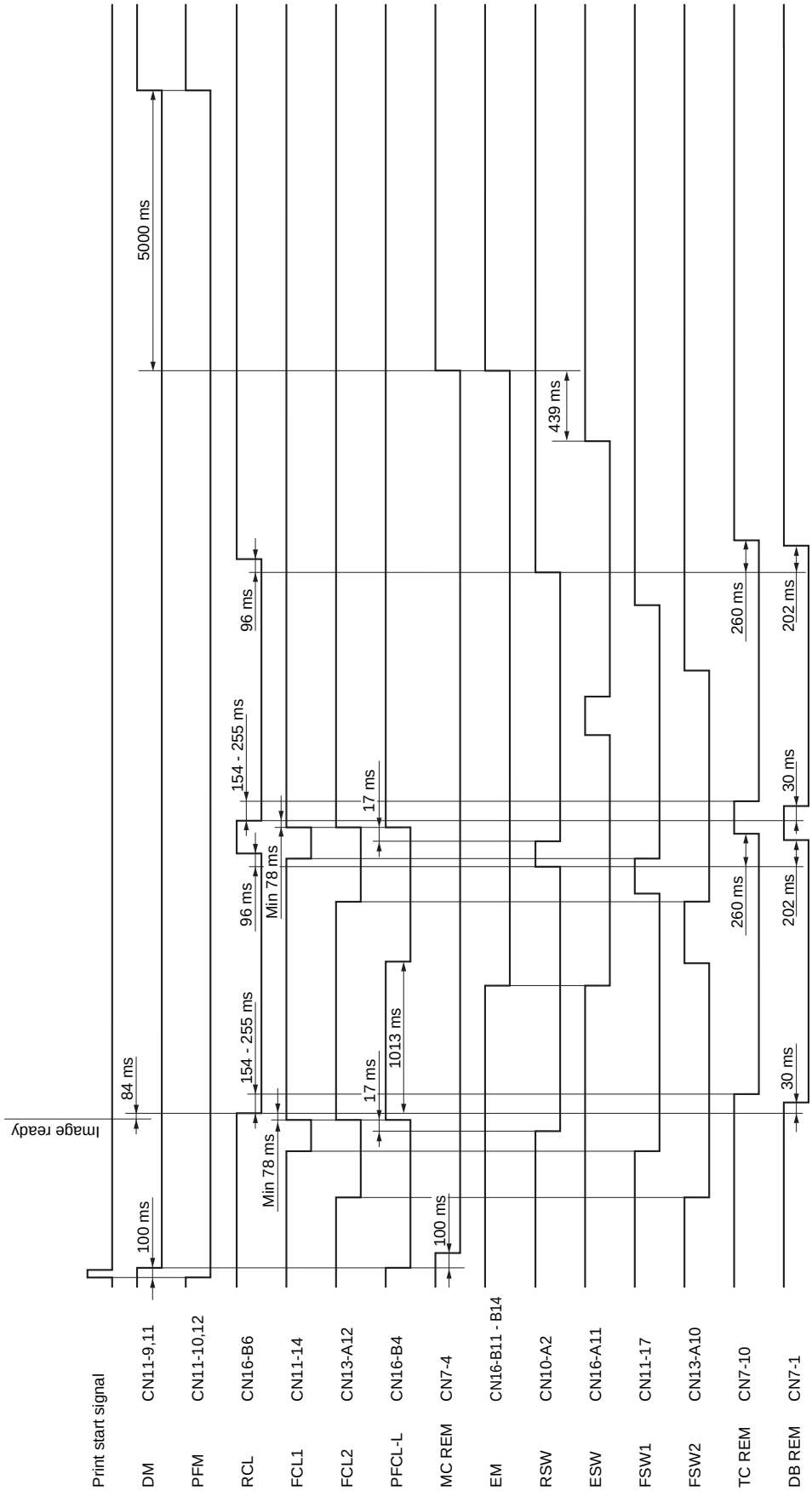

Timing chart No. 5 Continual two duplex printing from the lower cassette of the printer

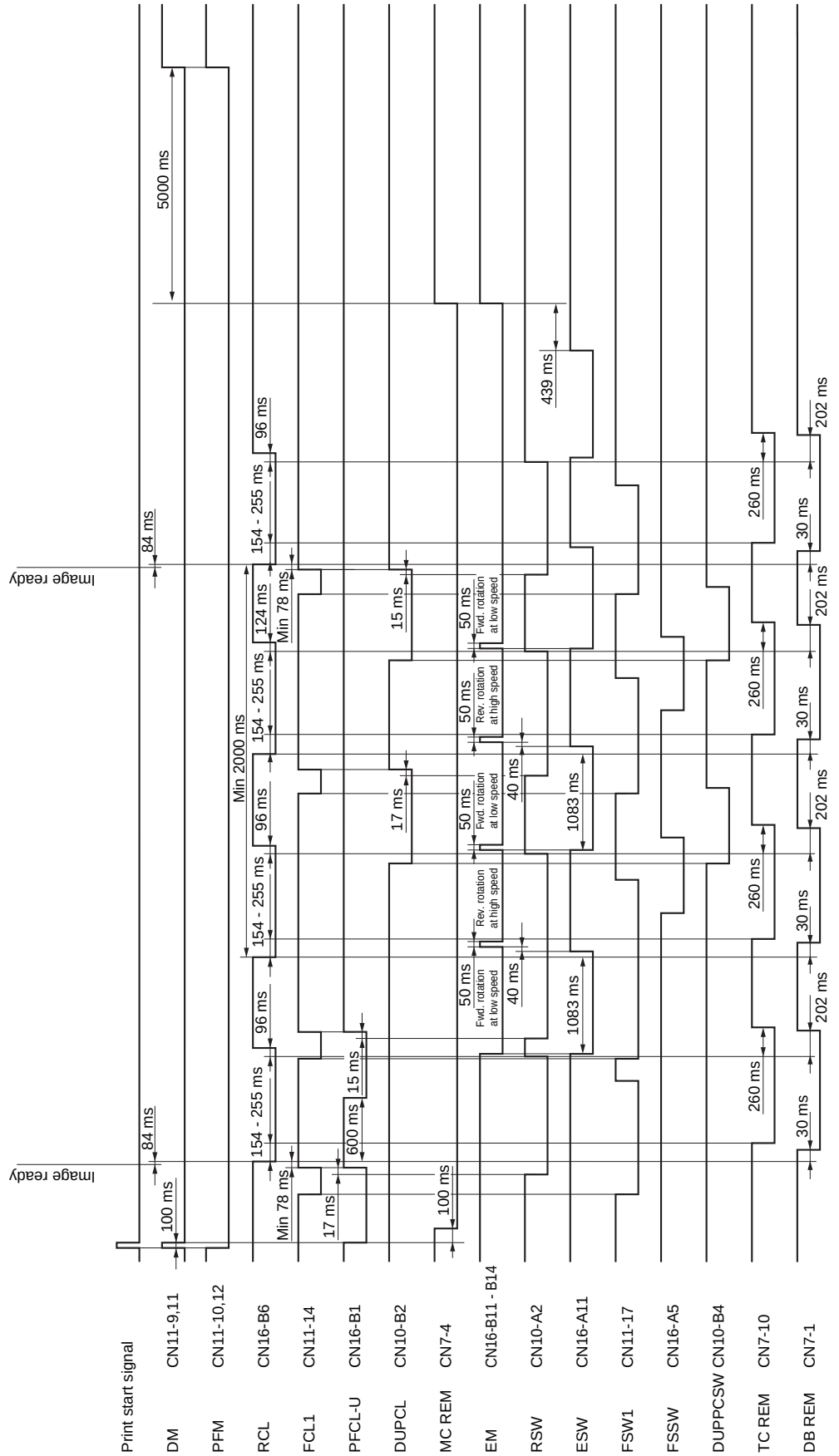

Timing chart No. 6 Continual two printing from the upper cassette of the paper feeder PF-70

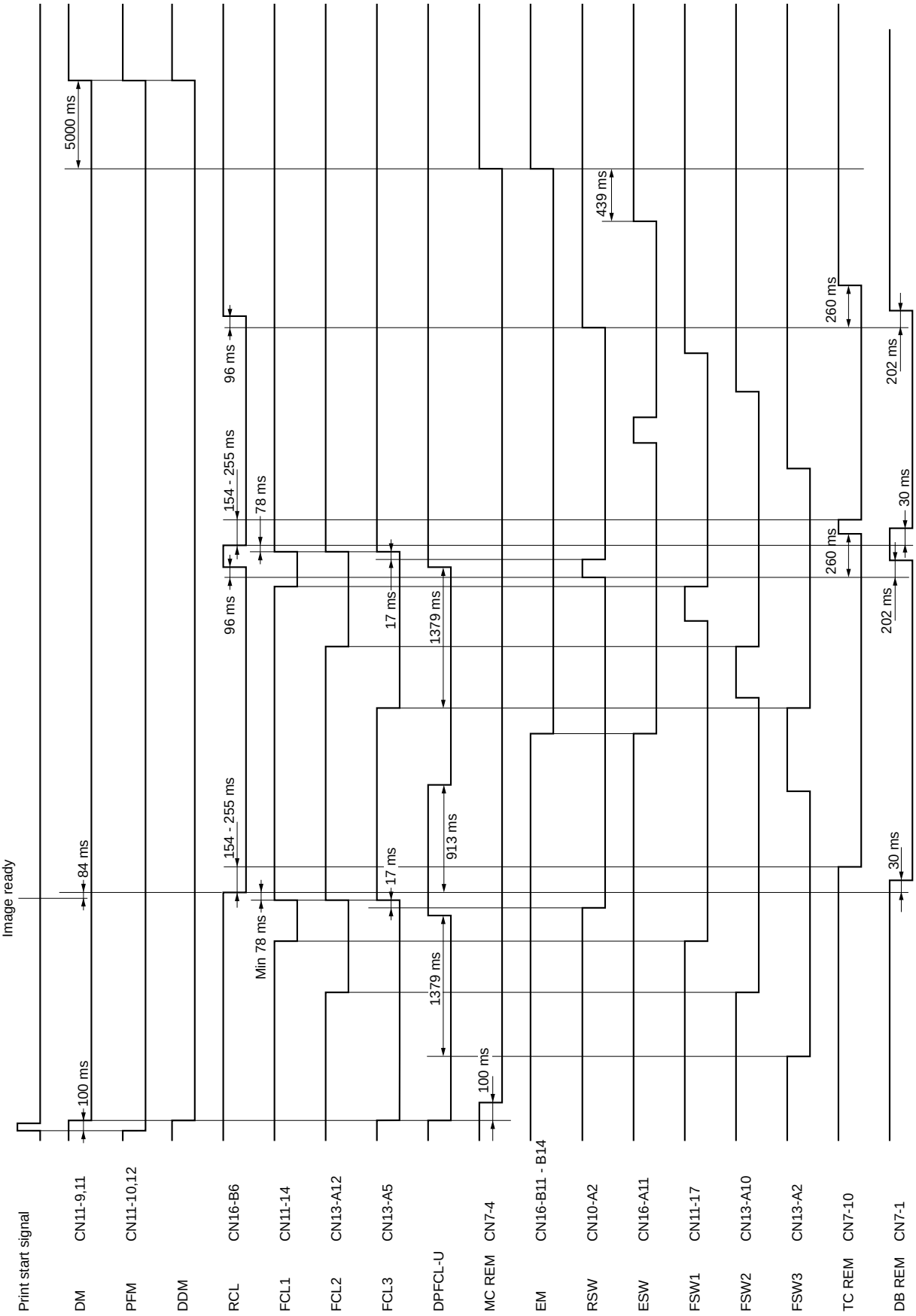

Wiring diagram

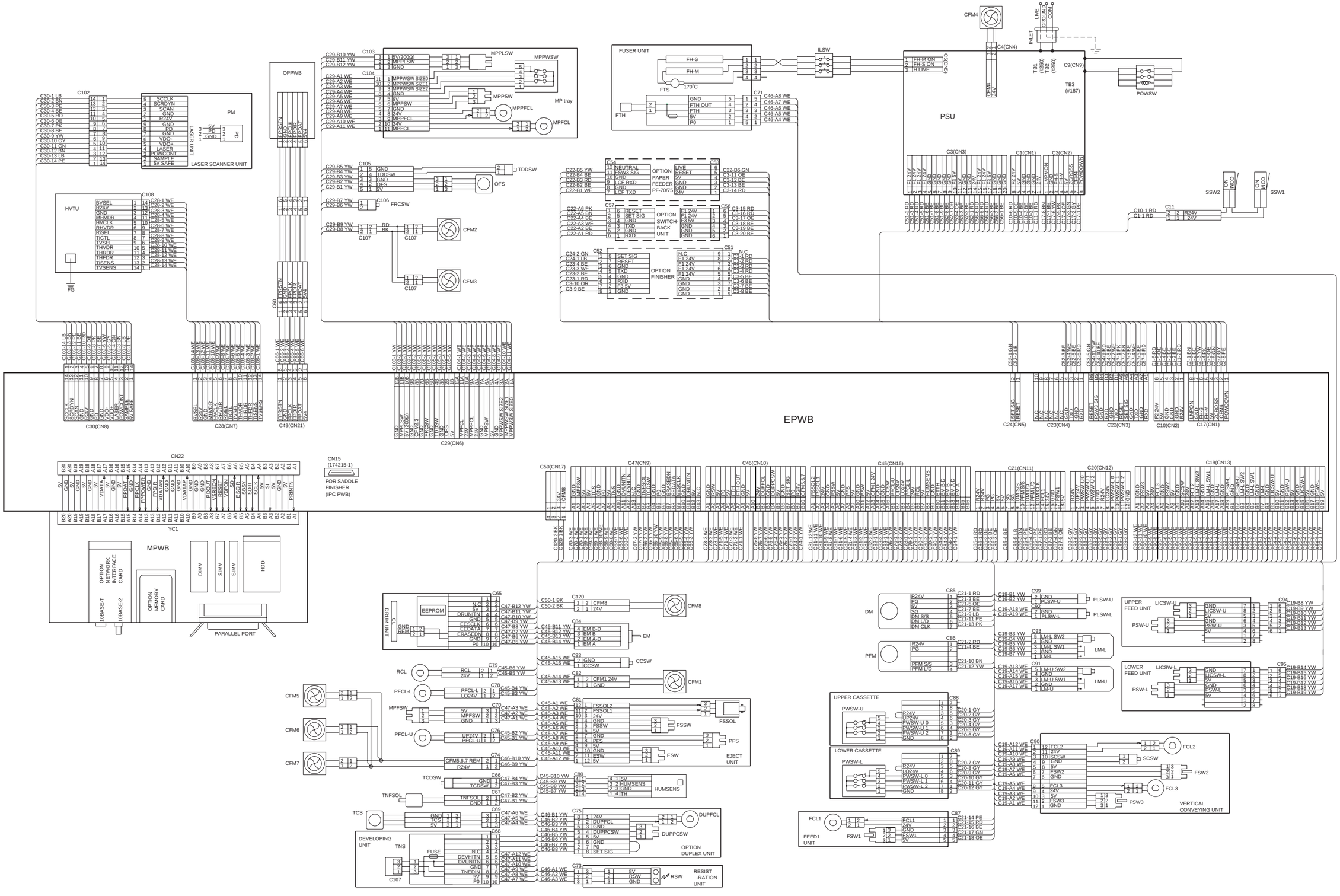

KYOCERA MITA EUROPE B.V.

Hoeksteen 40, 2132 MS Hoofddorp,
The Netherlands
Phone: (020) 6540000
Home page: http://www.kyoceramita-europe.com
Email: info@kyoceramita-europe.com

KYOCERA MITA NEDERLAND B.V.
Hoeksteen 40, 2132 MS Hoofddorp,
The Netherlands
Phone: (020) 5877200

KYOCERA MITA (UK) LIMITED
8 Beacontree Plaza
Gillette Way,
Reading RG2 0BS UK
Phone: (0118) 931 1500

KYOCERA MITA ITALIA S.P.A.
Via Verdi 89/91 20063 Cernusco sul Naviglio
(Milano) Italy
Phone: 02-92179 1

S.A. KYOCERA MITA BELGIUM N.V.
Hermesstraat 8A, 1930 Zaventem, Belgium
Phone: (02) 7209270

KYOCERA MITA FRANCE S.A.
Parc les Algorithmes
SAINT AUBIN
91194 GIF-SUR-YVETTE
France
Phone: (01) 69852600

KYOCERA MITA ESPAÑA S.A.
Edificio Mita, Avda. De Manacor Nº2,
Urb. Parque Rozas, Apartado de Correos 76,
28230 Las Rozas, Madrid, Spain
Phone: (91) 631-8392

KYOCERA MITA FINLAND OY
Kirvesmiehenkatu 4, 00810 Helsinki,
Finland
Phone: (09) 478-05200

KYOCERA MITA (SCHWEIZ) AG
Hölzliwisen, Industriestrasse 28,
8604 Volketswil, Switzerland
Phone: (01) 908 4949

KYOCERA MITA DEUTSCHLAND GMBH
Mollsfeld 12 40670 Meerbusch,
Germany
Phone: 02159-918120

KYOCERA MITA GMBH AUSTRIA
Eduard-Kittenberger-Gasse 95,
1230, Wien, Austria
Phone: (01) 86338-0

KYOCERA MITA SVENSKA AB
Siktgatan 2,
162 50 Vällingby, Sweden
Phone: (08) 4719999

KYOCERA MITA DANMARK A/S
Industrivej 11, DK-4632 Bjæverskov,
Denmark
Phone: 56871100

KYOCERA MITA PORTUGAL LDA.
CASCAISTOCK-Armazem nº8,
Rua das Fisgas, Alcoitão,
2765 Estoril, Portugal
Phone: (21) 4602221

KYOCERA MITA SOUTH AFRICA (PTY) LTD.
UNIT 3, "Kyalami Crescent,"
Kyalami Business Park,
1685 Midrand, South Africa
Phone: (11) 466-3290

KYOCERA MITA AMERICA, INC.

Headquarters:
225 Sand Road, P.O. Box 40008,
Fairfield, New Jersey 07004-0008,
U.S.A.
Phone: (973) 808-8444

KYOCERA MITA AUSTRALIA PTY. LTD.
Level 3, 6-10 Talavera Road, North Ryde,
N.S.W. 2113 Australia
Phone: (02) 9888-9999

KYOCERA MITA NEW ZEALAND LTD.
1-3 Parkhead Place,
Albany, Auckland,
New Zealand
Phone: (09) 415-4517

KYOCERA MITA (THAILAND) CORP., LTD.
9/209 Ratchada-Prachachem Road,
Bang Sue, Bangkok 10800, Thailand
Phone: (02) 586-0320

KYOCERA MITA SINGAPORE PTE LTD.
121 Genting Lane, 3rd Level,
Singapore 349572
Phone: (65) 7418733

KYOCERA MITA HONG KONG LIMITED
11/F., Mita Centre,
552-566, Castle Peak Road,
Tsuen Wan, New Territories,
Hong Kong
Phone: (852) 24297422

KYOCERA MITA CORPORATION

2-28, 1-chome, Tamatsukuri, Chuo-ku
Osaka 540-8585, Japan
Phone: (06) 6764-3555

©2001 KYOCERA MITA CORPORATION

KYOCERA is a trademark of Kyocera Corporation

mita is a registered trademark of KYOCERA MITA CORPORATION

KYOCERA MITA AMERICA, INC.

Headquarters:
225 Sand Road, P.O. Box 40008
Fairfield, New Jersey 07004-0008
TEL : (973) 808-8444
FAX : (973) 882-6000

New York Show Room:
149 West 51st street,
New York, NY 10019
TEL : (212) 554-2679
FAX : (212) 554-2625

Northeastern Region:
225 Sand Road, P.O. Box 40008
Fairfield, New Jersey 07004-0008
TEL : (973) 808-8444
FAX : (973) 882-4401

Midwestern Region:
201 Hansen Court Suite 119
Wood Dale, Illinois 60179
TEL : (630) 238-9982
FAX : (630) 238-9487

Western Region:
14101 Alton Parkway,
Irvine, California 92618-7006
TEL : (949) 457-9000
FAX : (949) 457-9119

Southeastern Region:
1500 Oakbrook Drive,
Norcross, Georgia 30093
TEL : (770) 729-9786
FAX : (770) 729-9873

Southwestern Region:
2825 West Story Road,
Irving, Texas 75038-5299
TEL : (972) 550-8987
FAX : (972) 570-4704

Dallas Parts Distribution Center & National Training Center:
2825 West Story Road,
Irving, Texas 75038-5299
TEL : (972) 659-0055
FAX : (972) 570-5816

KYOCERA MITA CANADA, LTD.

6120 Kestrel Road, Mississauga,
Ontario L5T 1S8, Canada
TEL : (905) 670-4425
FAX : (905) 670-8116

KYOCERA MITA MEXICO, S.A. DE C.V.

Av. 16 de Septiembre #407
Col. Santa Inés,
02130 Azcapotzalco
México, D.F. Mexico
TEL : (5) 383-2741
FAX : (5) 383-7804

©2001 KYOCERA MITA CORPORATION
KYOCERA is a trademark of Kyocera Corporation
mita is a registered trademark of KYOCERA MITA CORPORATION